SYLVANIA

engineering data service

SYLVANIA

8CP1
8CP*

CHARACTERISTICS

GENERAL DATA

Focusing Method	Electrostatic
Deflecting Method	Electrostatic

Types*	*Fluorescence*	*Phosphorescence*	*Persistence*
8CP1	Green	—	Medium
8CP2	Blue-Green	Green	Long
8CP4	White	—	Medium
8CP5	Blue	—	Veryshort
8CP7	Blue	Yellow	Long
8CP11	Blue	—	Short

**In addition to the types shown, the 8CP- can be supplied with several other screen phosphors.*

ELECTRICAL DATA

Heater Voltage	6.3 Volts
Heater Current	0.6 ± 10% Amperes
Direct Interelectrode Capacitances (Approx.)	
Cathode to All Other Electrodes	10 μμf
Grid No. 1 to All Other Electrodes	8 μμf
Between Deflecting Plates 1-2[1]	4 μμf
Between Deflecting Plates 3-4[1]	2 μμf
Deflecting Plate 1 to All Other Electrodes Except DP2	8 μμf
Deflecting Plate 2 to All Other Electrodes Except DP1	8 μμf
Deflecting Plate 3 to All Other Electrodes Except DP4	6 μμf
Deflecting Plate 4 to All Other Electrodes Except DP3	6 μμf

MECHANICAL DATA

Minimum Useful Screen Diameter	7½ Inches
Bulb Contact (Recessed Small Ball)	J1-22
Base (Medium Shell Diheptal 12-Pin)	B12-37
Basing	14J
Base alignment D1-D2 trace aligns with Pin No. 5 and No. 12	±10 Degrees

Positive voltage on D1 deflects beam toward Pin No. 5
Positive voltage on D3 deflects beam toward Pin No. 2

RATINGS

MAXIMUM RATINGS (Absolute Maximum Values)

Anode No. 3 Voltage	6,600 Volts	dc
Anode No. 2 Voltage	6,600 Volts	dc
Ratio of Anode No. 3 Voltage to Anode No. 2 Voltage	2.3:1 Volts	dc
Anode No. 1 Voltage	2,750 Volts	dc
Grid No. 1 Voltage		
Negative Bias Value	220 Volts	dc
Positive Bias Value	0	
Positive Peak Value	2 Volts	
Peak Heater Cathode Voltage		
Heater Negative with Respect to Cathode	140 Volts	
Heater Positive with Respect to Cathode	140 Volts	
Peak Voltage Between Anode No. 2 And Any Deflecting Plate	550 Volts	

QUICK REFERENCE DATA

Special Purpose Tube
8" Direct Viewed
Round Glass Type
Electrostatic Deflection
Electrostatic Focus
Post Deflection Accelerator

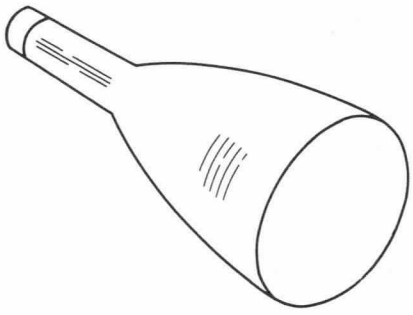

153006

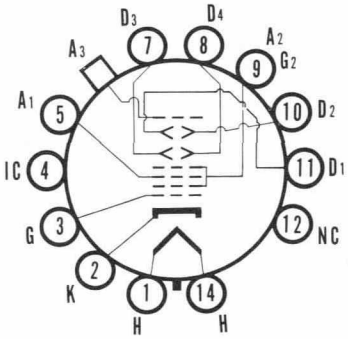

14-J

SYLVANIA
ELECTRONIC TUBES
A Division of
Sylvania Electric Products Inc.
PICTURE TUBE OPERATIONS
SENECA FALLS, NEW YORK

Prepared and Released By The
TECHNICAL PUBLICATIONS SECTION
EMPORIUM, PENNSYLVANIA

NOVEMBER, 1958

TYPICAL OPERATING CONDITIONS

Anode No. 3 Voltage	4,000 Volts dc
Anode No. 2 Voltage	2,000 Volts dc
Anode No. 1 Voltage	540 to 800 Volts dc
Grid No. 1 Voltage Required for Cutoff[2]	−24 to −56 Volts dc
Deflection Factor	
Deflecting Plates 1-2	58 to 81 Volts dc/Inch
Deflecting Plates 3-4	49 to 68 Volts dc/Inch

CIRCUIT VALUES

Grid No. 1 Circuit Resistance	1.5 Megohms Max.
Deflection Circuit Resistance	5.0 Megohms Max.

NOTES:

1. *Deflecting Plate 1 is Pin No. 11*
   Deflecting Plate 2 is Pin No. 10
   Deflecting Plate 3 is Pin No. 7
   Deflecting Plate 4 is Pin No. 8
2. *Visual extinction of undeflected spot.*

WARNING:
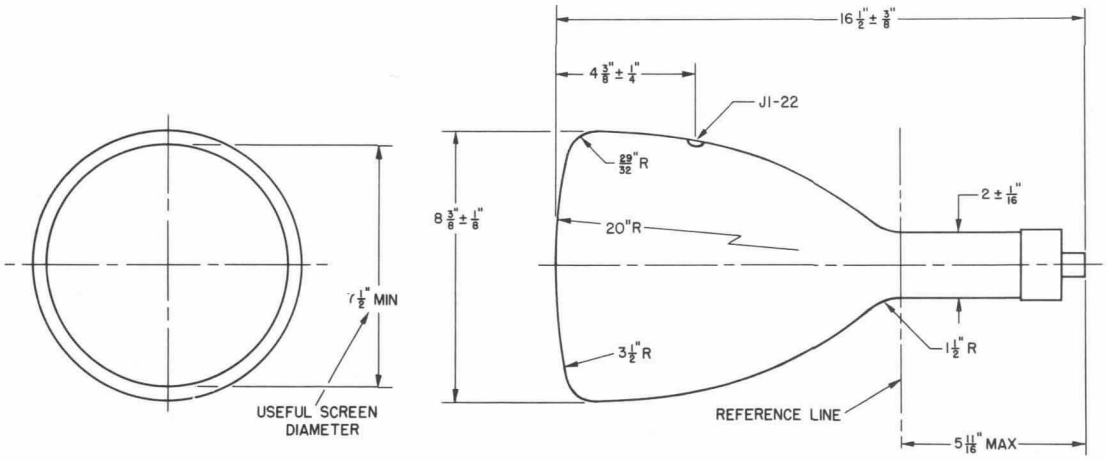
X-ray radiation shielding may be necessary to protect against possible danger of personal injury from prolonged exposure at close range if this tube is operated at higher than the manufacturer's Maximum Rated Anode Voltage or 16,000 volts, whichever is less.