TELEVISION PICTURE TUBE

DESCRIPTION

The 8AP4-A is a magnetic-focus and -deflection, direct-view picture tube for television applications. It provides a 5¼- by 7-inch picture. Features of this tube are a metal-cone envelope, an electron gun designed to be used with an external ion-trap magnet, and a high-quality, neutral-density faceplate which increases picture contrast and detail under high ambient light conditions.

TECHNICAL INFORMATION

GENERAL

Electrical

Heater voltage	6.3	volts
Heater current	0.6 ± 10%	ampere

Focusing method—magnetic
Deflecting method—magnetic

Deflecting angle, approximate	54	degrees

Phosphor—P4
- Fluorescence—white
- Persistence—medium

Faceplate—neutral density

Light transmission, approximate	76	percent

Direct interelectrode capacitances, approximate

Cathode to all other electrodes	5	uuf
Grid—No. 1 to all other electrodes	6	uuf

Electronic TUBE

GENERAL ELECTRIC

TECHNICAL INFORMATION (CONT'D)

Mechanical

Over-all length	$14\frac{1}{4} \pm \frac{3}{8}$	inches
Greatest diameter of bulb	$8\frac{1}{2} \pm \frac{3}{16}$	inches
Picture dimensions (with rounded sides)		
Width	7	inches
Height	$5\frac{1}{4}$	inches

Anode contact—metal cone rim
Base—small-shell duodecal 5-pin, B5-57
Basing—12H

MAXIMUM RATINGS Design Center Values

Anode voltage	9000 max	volts d-c
Grid—No. 1 voltage		
Negative—bias value	125 max	volts d-c
Positive—bias value	0 max	volts d-c
Positive—peak value	2 max	volts
Peak heater—cathode voltage*		
Heater negative with respect to cathode		
During warm-up period not to exceed 15 seconds	410 max	volts d-c
After equipment warm-up period	140 max	volts d-c
Heater positive with respect to cathode	140 max	volts d-c

RECOMMENDED OPERATING CONDITIONS

Anode voltage (average brightness = 20 foot-lamberts)	7000	volts
Grid—No. 1 voltage**	−27 to −63	volts
Focusing-coil current (RTMA coil No. 106 at $3\frac{1}{4}$-inches), approximate	115	milliamperes
Ion-trap field intensity***, approximate	45	gausses

MAXIMUM CIRCUIT VALUES

Grid—No. 1 circuit resistance	1.5 max	megohms

*Cathode should be returned to one side or to the midtap of the heater transformer winding.
**For visual extinction of undeflected focused spot.
***Single-field ion-trap magnet adjusted to optimum position.

8AP4-A

AVERAGE CHARACTERISTICS

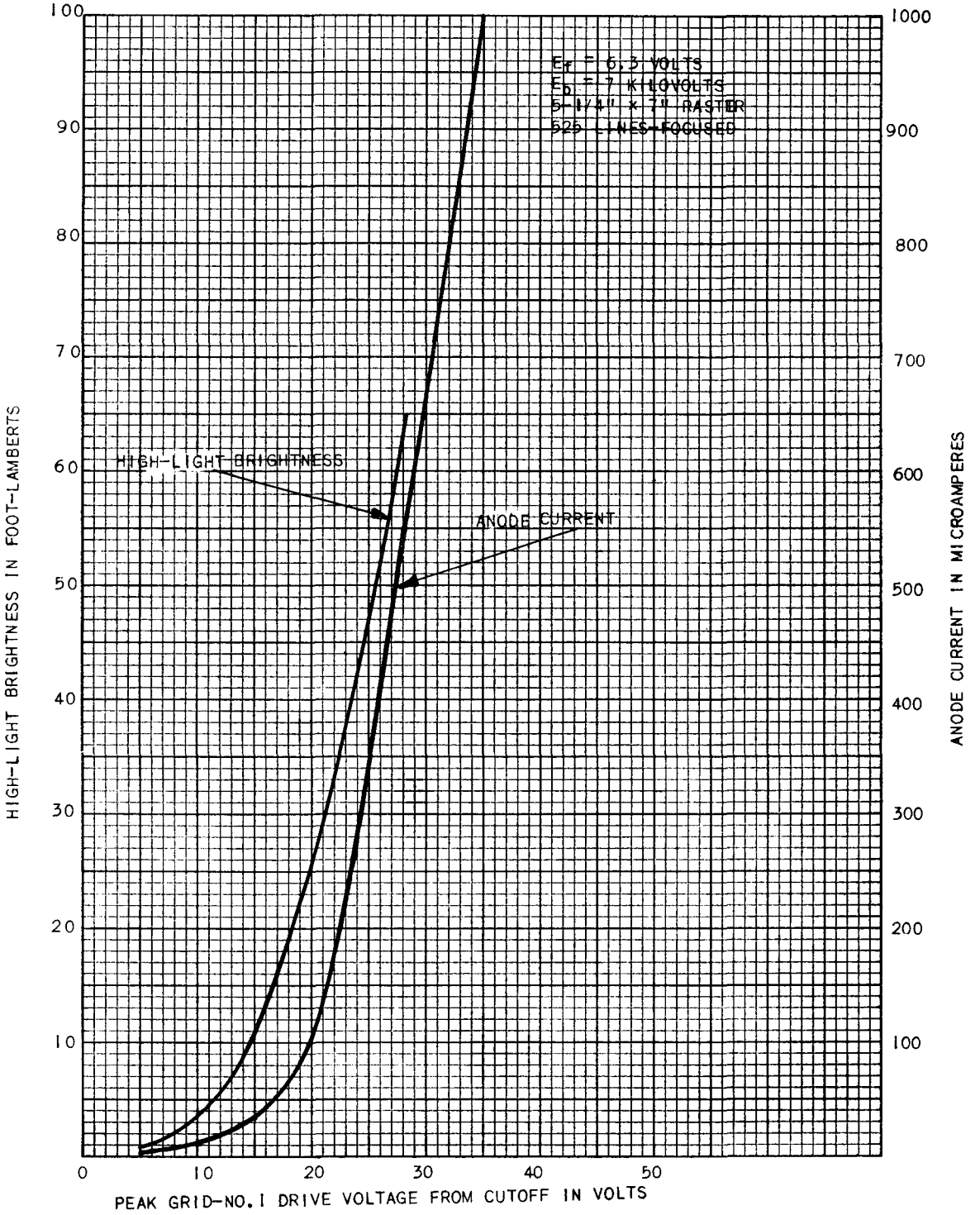

K-69087-72A347

1-26-51

OUTLINE
8AP4-A

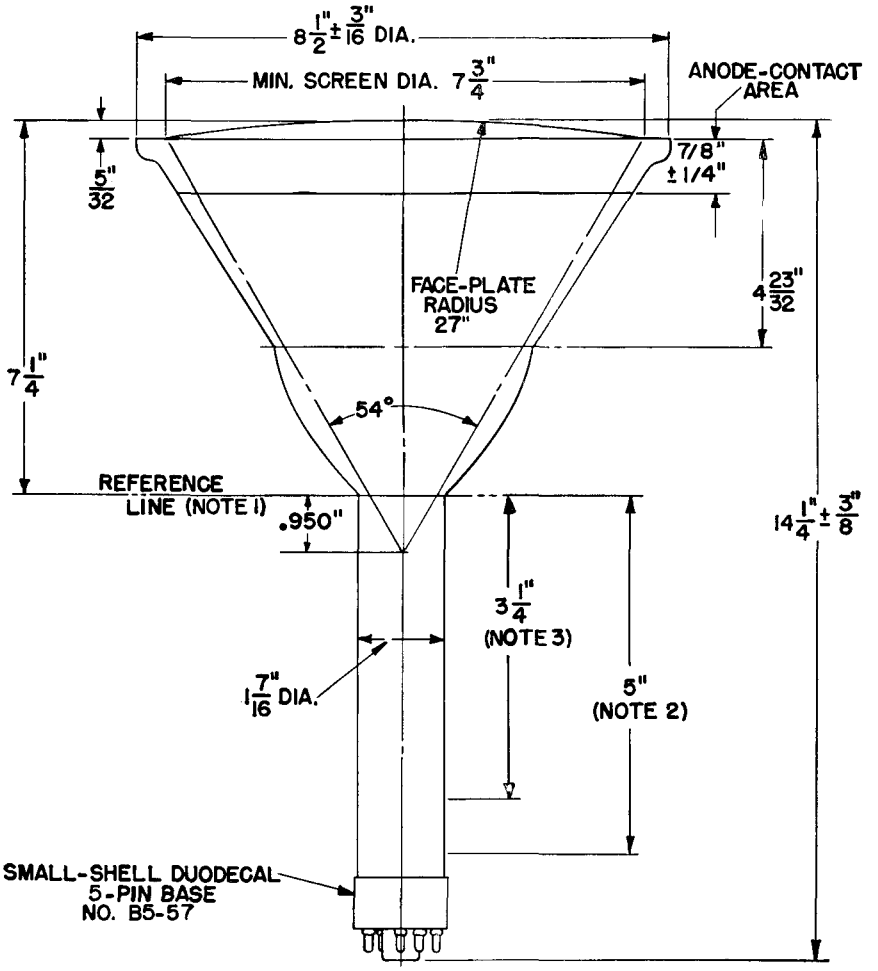

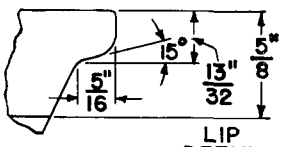

LIP DETAIL

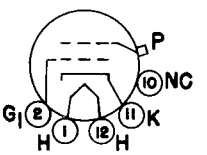

BASING DIAGRAM

NOTES:

1. REFERENCE LINE IS DETERMINED BY THE PLANE OF THE UPPER EDGE OF THE REFERENCE-LINE GAGE (RTMA NO. 112) WHEN THE GAGE IS RESTING ON THE GLASS CONE.
2. NOMINAL POSITION OF ION-TRAP MAGNET.
3. RECOMMENDED POSITION FOR CENTER OF FOCUSING FIELD.

N15130AZ 3-22-50

Tube Divisions, Electronics Department

GENERAL ELECTRIC

Schenectady, N. Y.