TECHNICAL DATA

8974 WATER COOLED POWER TETRODE

The EIMAC 8974 is a ceramic/metal, water-cooled power tetrode designed for very-high-power medium and high frequency broadcast service in the megawatt power range.

The 8974 has a two-section thoriated-tungsten mesh filament mounted on water-cooled supports. The two sections may be fed from an ac or dc power source. The maximum anode dissipation rating is 1500 kilowatts steady state.

Large-diameter coaxial terminals are used for the control grid and the rf filament terminals. Filament power and filament support cooling-water connections are made through three special connectors. Anode cooling water connections are made with available hand-tightened fittings with O-ring seals.

GENERAL CHARACTERISTICS[1]

ELECTRICAL

Filament: Thoriated-tungsten Mesh, two-section

Voltage, per section (See FILAMENT OPERATION note)	18.5 ± 0.9 V
Current @ 18.5 volts, per section (nominal)	650 A
Maximum Frequency for Full Ratings (CW)	30 MHz
Amplification Factor, Average, Grid to Screen	4.5
Direct Interelectrode Capacitances (grounded cathode)[2]	
Cin	1600 pF
Cout	260 pF
Cgp	7.5 pF
Direct Interelectrode Capacitances (grounded grid)[2]	
Cin	690 pF
Cout	265 pF
Cpk	1.5 pF

1. Characteristics and operating values are based on performance tests. These figures may change without notice as the result of additional data or product refinement. VARIAN EIMAC should be consulted before using this information for final equipment design.
2. Capacitance values shown are nominal, measured with no special shielding, in accordance with Electronic Industries Association Standard RS-191.

MECHANICAL

Net Weight	175 lb; 80 kg
Operating Position	Vertical, Base Down
Cooling	Water and Forced Air
Maximum Overall Dimensions:	
Length	25.50 in; 64.78 cm
Diameter	17.03 in; 43.26 cm
Maximum Operating Temperature, Envelope and Ceramic/Metal Seals	200 °C
Recommended Filament Power Connector (not supplied with tube):	
Filament Power/Water Connector (3 required)	EIMAC SK-2310
Filament rf Connector (1 required)	EIMAC SK-2315
Recommended Anode Cooling Water Connectors (not supplied with tube)	EIMAC SK-2320, SK-2321
Note: 2 connectors are required per tube	SK-2322 or SK-2323

396300 (Effective March 1986 - supersedes March 1984)
VA4896

Printed in U.S.A.

RADIO FREQUENCY LINEAR AMPLIFIER
GRID DRIVEN

Class AB

ABSOLUTE MAXIMUM RATINGS:

DC PLATE VOLTAGE	22.5	KILOVOLTS
DC SCREEN VOLTAGE	2.5	KILOVOLTS
DC GRID VOLTAGE	-2.0	KILOVOLTS
DC PLATE CURRENT	125	AMPERES
PLATE DISSIPATION	1500	KILOWATTS
SCREEN DISSIPATION	15	KILOWATTS
GRID DISSIPATION	4.0	KILOWATTS

TYPICAL OPERATION (Frequencies to 30 MHz)
CLASS AB1, Peak Envelope Conditions

Plate Voltage	20.0	kVdc
Screen Voltage	1500	Vdc
Grid Voltage **	-380	Vdc
Zero Signal Plate Current	20	Adc
Single Tone Plate Current	86.5	Adc
Single Tone Screen Current *	3.8	Adc
Peak rf Grid Voltage *	380	v
Plate Dissipation *	505	kW
Plate Load Resistance	132.2	Ohms
Plate Power Output *	1225	kW
Efficiency *	70.8	%

* Approximate value.
** Adjust for specified value of zero-signal plate current.

RADIO FREQUENCY POWER AMPLIFIER
Class C Telegraphy or FM
(Key-down Conditions)

ABSOLUTE MAXIMUM RATINGS:

DC PLATE VOLTAGE	22.5	KILOVOLTS
DC SCREEN VOLTAGE	2.5	KILOVOLTS
DC GRID VOLTAGE	-2.0	KILOVOLTS
DC PLATE CURRENT	125	AMPERES
PLATE DISSIPATION	1500	KILOWATTS
SCREEN DISSIPATION	15	KILOWATTS
GRID DISSIPATION	4.0	KILOWATTS

* Approximate Value

TYPICAL OPERATION (Frequencies to 30 MHz)

Plate Voltage	21.5	kVdc
Screen Voltage	1000	Vdc
Grid Voltage	-700	Vdc
Plate Current	125	Adc
Screen Current *	12	Adc
Grid Current *	7.2	Adc
Calculated Driving Power	7.0	kW
Plate Dissipation *	530	kW
Screen Dissipation *	12	kW
Grid Dissipation *	1.9	kW
Plate Load Resistance	85.5	Ohms
Plate Power Output *	2158	kW
Efficiency *	80.1	%

PLATE MODULATED RADIO FREQUENCY POWER
AMPLIFIER Class C Telephony
(Carrier Conditions)

ABSOLUTE MAXIMUM RATINGS:

DC PLATE VOLTAGE	17.5	KILOVOLTS
DC SCREEN VOLTAGE	2.0	KILOVOLTS
DC GRID VOLTAGE	-2.0	KILOVOLTS
DC PLATE CURRENT	100	AMPERES
PLATE DISSIPATION	1000	KILOWATTS
SCREEN DISSIPATION	15	KILOWATTS
GRID DISSIPATION	4.0	KILOWATTS

* Approximate value
\# 1500 kW at 100% sine-wave modulation

TYPICAL OPERATION (Frequencies to 30 MHz)

Plate Voltage	17.5	kVdc
Screen Voltage	1000	Vdc
Grid Voltage	-1000	Vdc
Plate Current	95	Adc
Screen Current *	8	Adc
Grid Current *	4.4	Adc
Peak Screen Voltage (100% modulation)	1000	v
Peak rf Grid Driving Voltage *	1280	v
Calculated Driving Power	6465	W
Plate Dissipation *	279	kW
Screen Dissipation *	8.0	kW
Grid Dissipation *	2.05	kW
Plate Load Resistance	85.6	Ohms
Plate Output Power *	1384	kW
Efficiency *	83.3	%

AUDIO FREQUENCY POWER AMPLIFIER OR
MODULATOR Class AB

ABSOLUTE MAXIMUM RATINGS (per tube):

DC PLATE VOLTAGE	22.5	KILOVOLTS
DC SCREEN VOLTAGE	2.5	KILOVOLTS
DC GRID VOLTAGE	-2.0	KILOVOLTS
DC PLATE CURRENT	125	AMPERES
PLATE DISSIPATION	1500	KILOWATTS
SCREEN DISSIPATION	15	KILOWATTS
GRID DISSIPATION	4.0	KILOWATTS

TYPICAL OPERATION (Two Tubes - Sinusoidal wave)

Plate Voltage	17.5	kVdc
Screen Voltage	1500	Vdc
Grid Voltage **	-455	Vdc
Zero-Signal Plate Current	10	Adc
Max.Signal Plate Current	146.2	Adc
Max.Signal Screen Current *	7.8	Adc
Peak Audio Freq.Grid Voltage #	455	v
Max.Signal Plate Dissipation #	272	kW
Plate/Plate Load Resistance	238.5	Ohms
Plate Output Power *	2015	kW

* Approximate value.
** Adjust for stated zero-signal plate current. # Per tube.

RADIO FREQUENCY POWER AMPLIFIER
Doherty Amplifier Service

ABSOLUTE MAXIMUM RATINGS:

DC PLATE VOLTAGE . . .	22.5	KILOVOLTS
DC SCREEN VOLTAGE . . .	2.5	KILOVOLTS
DC GRID VOLTAGE	-2.0	KILOVOLTS
DC PLATE CURRENT . . .	125	AMPERES
PLATE DISSIPATION . . .	1500	KILOWATTS
SCREEN DISSIPATION . .	15	KILOWATTS
GRID DISSIPATION . . .	4	KILOWATTS

TYPICAL OPERATION (Frequencies to 30 MHz)

Peak Tube - Peak of Modulation

Plate Voltage	19.0	kVdc
Screen Voltage	1600	Vdc
Grid Voltage *	-1.8	kVdc
Peak Grid Drive Voltage *	2220	v
Peak Grid Drive Power *	10	kw
Peak Plate Power Out *	2750	kw
Plate Load Resistance	51.5	Ohms

* Approximate value.

Carrier Tube - Carrier Conditions

Plate Voltage	19.0	kVdc
Screen Voltage	1600	Vdc
Grid Voltage *	-400	Vdc
Grid Current *	0.14	Adc
Screen Current *	7.3	Adc
Plate Current	101	Adc
Peak Grid Driving Voltage *	443	v
Grid Driving Power *	65	W
Plate Power Output *	1380	kW
Plate Dissipation *	510	kW
Plate Efficiency *	71	%
Plate Load Resistance	102	Ohms

Carrier Tube - Peak of Modulation

Peak Grid Drive Voltage *	668	v
Peak Grid Driving Power *	1090	w
Plate Power Output *	2750	kW
Plate Load Resistance	51.5	Ohms

Actual Load Resistance at Combining Point = 25.7 Ohms
Screen dissipation averaged over a sinusoidal modulation cycle - Modulation Index 1

Carrier Tube	14.0	kW
Peak Tube	8.5	kW

TYPICAL OPERATION values are obtained by calculation from published characteristic curves. To obtain the specified plate current at the specified bias, screen, and plate voltages, adjustment of the rf grid voltage is assumed. If this procedure is followed, there will be little variation in output power when the tube is replaced, even though there may be some variation in grid and screen currents. The grid and screen currents which occur when the desired plate current is obtained are incidental and vary from tube to tube. These current variations cause no performance degradation providing the circuit maintains the correct voltages in the presence of the current variations.

RANGE VALUES FOR EQUIPMENT DESIGN	Min.	Max.	Unit
Filament Current, Per Section, at 18.5 Volts ac	600	700	Aac
Interelectrode Capacitance (grounded cathode) [1]			
Cin	1525	1675	pF
Cout	230	290	pF
Cgp	---	10	pF
Interelectrode Capacitance (grounded grid) [1]			
Cin	650	730	pF
Cout	235	295	pF
Cpk	---	2.5	pF

1 Measured with no special shielding, in accordance with Electronic Industries Association Standard RS-191.

RADIO FREQUENCY LINEAR AMPLIFIER
GRID DRIVEN

Class AB

ABSOLUTE MAXIMUM RATINGS:

DC PLATE VOLTAGE . . .	22.5	KILOVOLTS
DC SCREEN VOLTAGE . . .	2.5	KILOVOLTS
DC GRID VOLTAGE	-2.0	KILOVOLTS
DC PLATE CURRENT . . .	125	AMPERES
PLATE DISSIPATION . . .	1500	KILOWATTS
SCREEN DISSIPATION . .	15	KILOWATTS
GRID DISSIPATION . . .	4.0	KILOWATTS

TYPICAL OPERATION (Frequencies to 30 MHz)
CLASS AB1, Peak Envelope Conditions

Plate Voltage	20.0	kVdc
Screen Voltage	1500	Vdc
Grid Voltage **	-380	Vdc
Zero Signal Plate Current	20	Adc
Single Tone Plate Current	86.5	Adc
Single Tone Screen Current *	3.8	Adc
Peak rf Grid Voltage *	380	v
Plate Dissipation *	505	kW
Plate Load Resistance	132.2	Ohms
Plate Power Output *	1225	kW
Efficiency *	70.8	%

* Approximate value.
** Adjust for specified value of zero-signal plate current.

RADIO FREQUENCY POWER AMPLIFIER
Class C Telegraphy or FM
(Key-down Conditions)

ABSOLUTE MAXIMUM RATINGS:

DC PLATE VOLTAGE . . .	22.5	KILOVOLTS
DC SCREEN VOLTAGE . . .	2.5	KILOVOLTS
DC GRID VOLTAGE	-2.0	KILOVOLTS
DC PLATE CURRENT . . .	125	AMPERES
PLATE DISSIPATION . . .	1500	KILOWATTS
SCREEN DISSIPATION . .	15	KILOWATTS
GRID DISSIPATION . . .	4.0	KILOWATTS

* Approximate Value

TYPICAL OPERATION (Frequencies to 30 MHz)

Plate Voltage	21.5	kVdc
Screen Voltage	1000	Vdc
Grid Voltage	-700	Vdc
Plate Current	125	Adc
Screen Current *	12	Adc
Grid Current *	7.2	Adc
Calculated Driving Power	7.0	kW
Plate Dissipation *	530	kW
Screen Dissipation *	12	kW
Grid Dissipation *	1.9	kW
Plate Load Resistance	85.5	Ohms
Plate Power Output *	2158	kW
Efficiency *	80.1	%

PLATE MODULATED RADIO FREQUENCY POWER
AMPLIFIER Class C Telephony
(Carrier Conditions)

ABSOLUTE MAXIMUM RATINGS:

DC PLATE VOLTAGE . . .	17.5	KILOVOLTS
DC SCREEN VOLTAGE . . .	2.0	KILOVOLTS
DC GRID VOLTAGE	-2.0	KILOVOLTS
DC PLATE CURRENT . . .	100	AMPERES
PLATE DISSIPATION . . .	1000	KILOWATTS
SCREEN DISSIPATION . .	15	KILOWATTS
GRID DISSIPATION . . .	4.0	KILOWATTS

* Approximate value
\# 1500 kW at 100% sine-wave modulation

TYPICAL OPERATION (Frequencies to 30 MHz)

Plate Voltage	17.5	kVdc
Screen Voltage	1000	Vdc
Grid Voltage	-1000	Vdc
Plate Current	95	Adc
Screen Current *	8	Adc
Grid Current *	4.4	Adc
Peak Screen Voltage (100% modulation) . .	1000	v
Peak rf Grid Driving Voltage *	1280	v
Calculated Driving Power	6465	W
Plate Dissipation *	279	kW
Screen Dissipation *	8.0	kW
Grid Dissipation *	2.05	kW
Plate Load Resistance	85.6	Ohms
Plate Output Power *	1384	kW
Efficiency *	83.3	%

AUDIO FREQUENCY POWER AMPLIFIER OR
MODULATOR Class AB

ABSOLUTE MAXIMUM RATINGS (per tube):

DC PLATE VOLTAGE . . .	22.5	KILOVOLTS
DC SCREEN VOLTAGE . . .	2.5	KILOVOLTS
DC GRID VOLTAGE	-2.0	KILOVOLTS
DC PLATE CURRENT . . .	125	AMPERES
PLATE DISSIPATION . . .	1500	KILOWATTS
SCREEN DISSIPATION . .	15	KILOWATTS
GRID DISSIPATION . . .	4.0	KILOWATTS

TYPICAL OPERATION (Two Tubes - Sinusoidal wave)

Plate Voltage	17.5	kVdc
Screen Voltage	1500	Vdc
Grid Voltage **	-455	Vdc
Zero-Signal Plate Current	10	Adc
Max.Signal Plate Current	146.2	Adc
Max.Signal Screen Current *	7.8	Adc
Peak Audio Freq.Grid Voltage #	455	v
Max.Signal Plate Dissipation #	272	kW
Plate/Plate Load Resistance	238.5	Ohms
Plate Output Power *	2015	kW

* Approximate value.
** Adjust for stated zero-signal plate current. # Per tube.

RADIO FREQUENCY POWER AMPLIFIER
Doherty Amplifier Service

ABSOLUTE MAXIMUM RATINGS:

DC PLATE VOLTAGE . . .	22.5	KILOVOLTS
DC SCREEN VOLTAGE . . .	2.5	KILOVOLTS
DC GRID VOLTAGE	-2.0	KILOVOLTS
DC PLATE CURRENT . . .	125	AMPERES
PLATE DISSIPATION . . .	1500	KILOWATTS
SCREEN DISSIPATION . .	15	KILOWATTS
GRID DISSIPATION . . .	4	KILOWATTS

TYPICAL OPERATION (Frequencies to 30 MHz)

Peak Tube - Peak of Modulation

Plate Voltage	19.0	kVdc
Screen Voltage	1600	Vdc
Grid Voltage *	-1.8	kVdc
Peak Grid Drive Voltage *	2220	v
Peak Grid Drive Power *	10	kw
Peak Plate Power Out *	2750	kw
Plate Load Resistance	51.5	Ohms

* Approximate value.

Carrier Tube - Carrier Conditions

Plate Voltage	19.0	kVdc
Screen Voltage	1600	Vdc
Grid Voltage *	-400	Vdc
Grid Current *	0.14	Adc
Screen Current *	7.3	Adc
Plate Current	101	Adc
Peak Grid Driving Voltage *	443	v
Grid Driving Power *	65	W
Plate Power Output *	1380	kW
Plate Dissipation *	510	kW
Plate Efficiency *	71	%
Plate Load Resistance	102	Ohms

Carrier Tube - Peak of Modulation

Peak Grid Drive Voltage *	668	v
Peak Grid Driving Power *	1090	w
Plate Power Output *	2750	kW
Plate Load Resistance	51.5	Ohms

Actual Load Resistance at Combining Point = 25.7 Ohms
Screen dissipation averaged over a sinusoidal modulation cycle - Modulation Index 1

Carrier Tube	14.0	kW
Peak Tube	8.5	kW

TYPICAL OPERATION values are obtained by calculation from published characteristic curves. To obtain the specified plate current at the specified bias, screen, and plate voltages, adjustment of the rf grid voltage is assumed. If this procedure is followed, there will be little variation in output power when the tube is replaced, even though there may be some variation in grid and screen currents. The grid and screen currents which occur when the desired plate current is obtained are incidental and vary from tube to tube. These current variations cause no performance degradation providing the circuit maintains the correct voltages in the presence of the current variations.

RANGE VALUES FOR EQUIPMENT DESIGN	Min.	Max.	Unit
Filament Current, Per Section, at 18.5 Volts ac	600	700	Aac
Interelectrode Capacitance (grounded cathode) [1]			
Cin	1525	1675	pF
Cout	230	290	pF
Cgp	---	10	pF
Interelectrode Capacitance (grounded grid) [1]			
Cin	650	730	pF
Cout	235	295	pF
Cpk	---	2.5	pF

1 Measured with no special shielding, in accordance with Electronic Industries Association Standard RS-191.

APPLICATION

MECHANICAL

INITIAL UNPACKING - To insure the safety of the tube, the following unpacking instructions should be followed:

1. The shippping crate is opened by removing the four hex-head bolts just above the carrying handles.
2. Attach a lifting hoist to the lifting loop and raise slightly to support the weight of the tube.
3. Remove 8 bolts securing the mounting brackets to the corner flanges.
4. Lift the tube and place on blocks or on a stand so that its weight is supported by the lower flange.
5. Remove the mounting brackets from the tube by removing the eight hex bolts and nuts.

MOUNTING - The 8974 must be mounted vertically, base down. The full weight of the tube should rest on the screen-grid contact flange at the base of the tube, and all lifting of the tube should be done with the lifting eye which is attached to the top of the anode cooling jacket.

ANODE COOLING - Tube life can be seriously compromised by cooling water condition. If it becomes contaminated, deposits will form on the inside of the water jacket, causing localized anode heating and eventual tube failure. To insure minimum electrolysis and power loss, the water resistance at 25 Deg C should always be one megohm per cubic centimeter or higher. Relative water resistance can be continuously monitored in the reservoir by readily available instruments.

Minimum water flow requirements for the anode are shown in the table for an outlet water temperature not to exceed 70°C and with an inlet water temperature of 50°C. System pressure should not exceed 100 psi.

Anode Dissipation (kW)	Water Flow (gpm)	Approx.Jacket Press. Drop (psi)
Fil.Only	35	5
500	130	25
1000	250	75
1500	300	100

High velocity water flow is required to maintain high thermal efficiency. Cooling water must be well filtered, with effectivness the equivalent of a 100-mesh screen, to eliminate any solid material and avoid the possibility of blockage of any cooling passages, as this would immediately affect cooling efficiency and could produce localized anode overheating and failure of the tube.

EIMAC Application Bulletin #16, WATER PURITY REQUIREMENTS IN LIQUID COOLING SYSTEMS, is available on request, and contains considerable detail on purity requirements and maintenance systems.

BASE COOLING - The tube base requires air cooling with a minimum of 50 cfm of air at 50°C maximum at sea level, directed toward the base seal areas from a general purpose fan. At higher frequencies considerably greater flow may be required. It should be noted that temperatures of the ceramic/metal seals and the lower envelope areas are the controlling and final limiting factor.

Temperature-sensitive paints are available for use in checking temperatures in these areas before equipment design and air-cooling arrangements are finalized. Additional detail is given in EIMAC Application Bulletin #20, available on request.

Water cooling of the filament and screen grid supports is also required, with inlet water temperature not to exceed 50°C. Each of the three filament connectors includes both an inlet and an outlet line, with the proper connector for the inlet water shown on the tube outline drawing. Minimum flow for the F1 and F3 connectors is 1.0 gpm, at an approximate pressure drop of 15 psi. Minimum flow for the F2 connector is 4.0 gpm, at an approximate pressure drop of 55 psi. The screen grid cooling water is fed by means of 1/4-18 NPT tapped holes shown on the tube outline drawing, with a minimum flow of 2.0 gpm required, at an approximate pressure drop of 25 psi.

ALL COOLING MUST BE APPLIED BEFORE OR SIMULTANEOUSLY WITH THE APPLICATION OF ELECTRODE VOLTAGES, INCLUDING THE FILAMENT, AND SHOULD NORMALLY BE MAINTAINED FOR SEVERAL MINUTES AFTER ALL VOLTAGES ARE REMOVED TO ALLOW FOR TUBE COOLDOWN.

ELECTRICAL

ABSOLUTE MAXIMUM RATINGS - Values shown for each type of service are based on the "absolute system" and are not to be exceeded under any service conditions. These ratings are limiting values outside which serviceability of the tube may be impaired. In order not to exceed absolute ratings the equipment designer has the responsibility of determining an average design value for each rating below the absolute value of that rating by a safety factor so that the absolute values will never be exceeded under any usual conditions of supply-voltage variation, load variation, or manufacturing variation in the equipment itself. It does not necessarily follow that combinations of absolute maximum ratings can be attained simultaneously.

FILAMENT OPERATION - Filament turn-on and turn-off should be programmed. Filament voltage should be smoothly increased from zero to the operating level over a period of two minutes, and a motor-driven continuously variable autotransformer (such as a VARIAC® or a POWERSTAT®) is suggested. Inrush current must never be allowed to exceed twice normal operating current. Normal turnoff procedure should be a smooth decrease from the operating voltage to zero over a period of two minutes.

Filament life will be substantially improved if the filament is maintained at a standby voltage of 3.5 to 4.0 volts per section when the tube is not in use. It is recommended the filament be cycled up from and down to this standby level (rather than to 0 volts) in the manner indicated above in order to maximize filament life. A minimum cooling water flow of at least 1.0 gpm is required through all cooling circuits (including the anode) during standby operation.

At rated (nominal) filament voltage the peak emission capability of the tube is many times that needed for communication service. A reduction in

filament voltage will lower the filament temperature, which will substantially increase life expectancy. The correct value of filament voltage should be determined for the particular application. It is recommended the tube be operated at full nominal voltage for an initial stabilization period of 100 to 200 hours before any action is taken to operate at reduced voltage. The voltage should gradually be reduced until there is a slight degradation in performance (such as power output or distortion). The filament voltage should then be increased several tenths of a volt above the value where performance degradation was noted for operation. The operating point should be rechecked after 24 hours. Filament voltage should be closely regulated when voltage is to be reduced below nominal in this manner, to avoid any adverse influence by normal line voltage variations. A filament voltage of 17.5 volts per section is adequate for most applications.

Filament voltage should be measured at the tube base, using an accurate rms-responding meter. Periodically throughout the life of the tube the procedure outlined above for voltage reduction should be repeated, resetting voltage as required, to assure best tube life.

EIMAC Application Bulletin #18, titled "EXTENDING TRANSMITTER TUBE LIFE", contains detailed information and is available on request.

Where hum is an important system consideration it is permissible to operate the filaments with dc rather than ac power. Contact Varian EIMAC Application Engineering for special precautions when using a dc filament supply.

Care should be exercised to keep any rf power out of the filament of the tube, as this can cause excessive operating temperatures. Both sides of the filament must be bypassed to assure monopotential operation. It should be ascertained that no resonance exists in the filament circuit which could be excited during operation.

This tube is designed for commercial service, with one off/on filament cycle per day. If additional cycling is anticipated it is recommended the user contact Application Engineering at VARIAN EIMAC for additional information.

VACION® PUMP OPERATION - The tube is supplied with an ion pump and magnet, mounted on the filament structure at the base (stem). A power supply (Varian Part #921-0015) and an 8-foot cable (Varian Part #924-0020) are required for operation. The primary function of this device is to allow monitoring of the condition of the tube vacuum, as shown by an ion current meter.

With an operational tube it is recommended the VACION pump be operated full time so tube vacuum may be monitored on a continuous basis. A reading of less than 10 uAdc should be considered as normal, indicating excellent tube vacuum. In addition to other interlock circuitry it is recommended that full advantage be taken of the VACION pump readout by providing circuitry which will shut down all power to the tube in the event the readout current exceeds 50 uAdc. In the event of such a shutdown, the VACION pump should be operated alone until vacuum recovery is indicated by a reading of 10 uAdc or less, at which point the tube may again be made operational. If the vacuum current rises again it should be considered as indicating a circuit problem such that some tube element may be over-dissipating and outgassing.

In the case of a spare tube (non-operational) it is recommended the VACION pump be operated continuously if possible. Otherwise it should be operated periodically to check the condition of tube vacuum, and operated as long as necessary to achieve a reading of 10 uAdc or better.

Figure 1 shows the relationship between tube vacuum and the ion current reading. Electrode voltages should never be applied if a reading of 50 uAdc or higher is obtained. Filament voltage should never be applied with a VacIon pump current of 1.0 mA or higher. In the event poor vacuum cannot be improved by operation of the VACION pump the user should contact EIMAC and review the case with an Applications Engineering specialist.

PLATE OPERATION - The plate dissipation maximum rating of 1500 kilowatts provides a large margin of safety for most applications. The rating may be exceeded for very brief periods during setup or tuning. When used as a plate-modulated rf amplifier, plate dissipation under carrier conditions is limited to 1000 kilowatts.

Operation with significant plate current under some conditions of high instantaneous anode voltage (such as regulator service or low power and low impedance "tuning" conditions) can, as a result of the screen and grid voltages chosen, lead to anode damage and subsequent failure. If operation under such conditions is necessary EIMAC Application Engineering should be contacted for assistance in selection of operating parameters.

GRID OPERATION - The maximum grid dissipation is 4000 watts and protective measures should be taken to insure that this rating is not exceeded. Grid dissipation is approximately equal to the product of dc grid current and peak positive grid voltage. A protective spark gap device should be connected between the control grid and the cathode to guard against excessive voltage.

SCREEN OPERATION - The maximum screen grid dissipation is 15,000 watts. With no ac applied to the screen grid, dissipation is simply the product of dc screen voltage and the dc screen current. With screen modulation, dissipation is dependent on rms screen voltage and rms screen current. Plate voltage, plate loading, or bias voltage must never be removed while filament and screen voltages are present, since screen dissipation ratings will be exceeded. Suitable protective circuitry must be provided to remove screen power in case of a fault condition. A protective spark-gap device should be connected between the screen grid and the cathode to guard against excessive voltage.

Tetrode tubes may exhibit reversed screen current to a greater or lesser degree depending on individual tube design and operating conditions. The screen supply voltage must be maintained constant for any values of negative or positive screen currents which may be encountered. Dangerously high plate currents may flow if the screen power supply exhibits a rising voltage characteristic with negative screen current. Stabilization may be accomplished by use of a shunt regulator circuit in the screen voltage supply, bleeder resistors, or other suitable techniques.

PULSE OPERATION - The thermal time constants of the internal tube elements vary from a few milliseconds in the case of the grids to about 200 milliseconds for the anode. In many applications the meaning of duty as applied to a pulse chain is lost because the interpulse period is very long. For pulse lengths greater than 10 milliseconds, where the interpulse period is more than 10 times the pulse duration, the element dissipations and required cooling are governed by the watt-seconds during the pulse. Provided the watt-seconds are less than the listed maximum dissipation rating and sufficient cooling is supplied, tube life will be protected. To maintain high cooling efficiency the anode water flow must be sufficient to insure turbulent flow. EIMAC has determined that a minimum flow of 35 gpm (130 lpm) is required.

FAULT PROTECTION - In addition to the normal plate over-current interlock and coolant interlock, the tube must be protected from internal damage caused by any arc which may occur. A protective resistance should always be connected in series with the grid and anode to help absorb power supply stored energy if an arc should occur. An electronic crowbar, which will discharge power supply capacitors in a few microseconds after the start of an arc, is recommended. The protection test for each supply is to short each electrode to ground, one at a time, through a vacuum relay switch and a 6-inch length of #30 AWG copper wire. The wire will remain intact if protection is adequate. As noted in GRID OPERATION and SCREEN OPERATION a protective spark gap should be connected from grid to ground and from screen grid to ground.

EIMAC Application Bulletin #17 titled FAULT PROTECTION contains considerable detail, and is available on request.

LOAD VSWR - The load VSWR should be monitored and the detected signal used to operate the interlock system to remove plate voltage within 20 milliseconds after a fault occurs. In the case of high stored energy in the load system, care must be taken to avoid excessive return energy from damaging the tube and associated circuit components.

X-RADIATION HAZARD - High-vacuum tubes operating at voltages higher than 15 kilovolts produce progressively more dangerous X-ray radiation as the voltage is increased. This tube, operating at its rated voltages and currents, is a potential X-ray source. Only limited shielding is afforded by the tube envelope. Moreover, the X-radiation level may increase significantly with tube aging and gradual deterioration, due to leakage paths or emission characteristics as they are effected by the high voltage. X-ray shielding may be required on all sides of tubes operating at these voltages to provide adequate protection throughout the life of the tube. Periodic checks on the X-ray level should be made, and the tube should never be operated without required shielding in place. If there is any question as to the need for or the adequacy of shielding, an expert in this field should be contacted to perform an equipment X-ray survey.

In cases where shielding has been found to be required operation of the equipment with interlock switches "cheated" and cabinet doors open in order to be better able to locate an equipment malfunction can result in serious X-ray exposure.

HIGH VOLTAGE - Normal operating voltages used with this tube are deadly, and the equipment must be designed properly and operating precautions must be followed. Design all equipment so that no one can come in contact with high voltages. All equipment must include safety enclosures for high-voltage circuits and terminals, with interlock switches to open primary circuits of the power supply and to discharge high-voltage capacitors whenever access doors are opened. Interlock switches must not be bypassed or "cheated" to allow operation with access doors open. Always remember that HIGH VOLTAGE CAN KILL.

RADIO-FREQUENCY RADIATION - Avoid exposure to strong rf fields even at relatively low frequency. Absorption of rf energy by human tissue is dependent on frequency. Under 300 MHz most of the energy will pass completely through the human body with little attenuation or heating affect. Public health agencies are concerned with the hazard even at these frequencies. OSHA (Occupational Safety and Health Administration) recommends that prolonged exposure to rf radiation should be limited to 10 milliwatts per square centimeter.

INTERELECTRODE RF TUNING CHARACTERISTICS - Typical interelectrode tuning characteristics may be obtained by contacting VARIAN EIMAC Power Grid Tube Application Engineering.

INTERELECTRODE CAPACITANCE - The actual internal interelectrode capacitance of a tube is influenced by many variables in most applications, such as stray capacitance to the chassis from the tube terminals and associated wiring. To control the actual capacitance values within the tube, as the key component involved, the industry and Military Services use a standard test procedure as described in Electronic Industries Association Standard RS-191. The test is performed on a cold tube, and in the case of the 8974, with no special shielding. Other factors being equal, controlling internal tube capacitance in this way normally assures good interchangeability of tubes over a period of time. The capacitance values shown in the test specification or technical data are taken in accordance with Standard RS-191.

The equipment designer is cautioned to make allowance for the capacitance values, including tube-to-tube variation and strays, which will exist in any normal application. Measurements should be taken with mounting which represent approximate final layout if capacitance values are highly significant in the design.

SPECIAL APPLICATIONS - When it is desired to operate this tube under conditions widely different from those listed here, write to VARIAN EIMAC; attn: Applications Engineering; 301 Industrial Way; San Carlos, CA 94070 U.S.A.

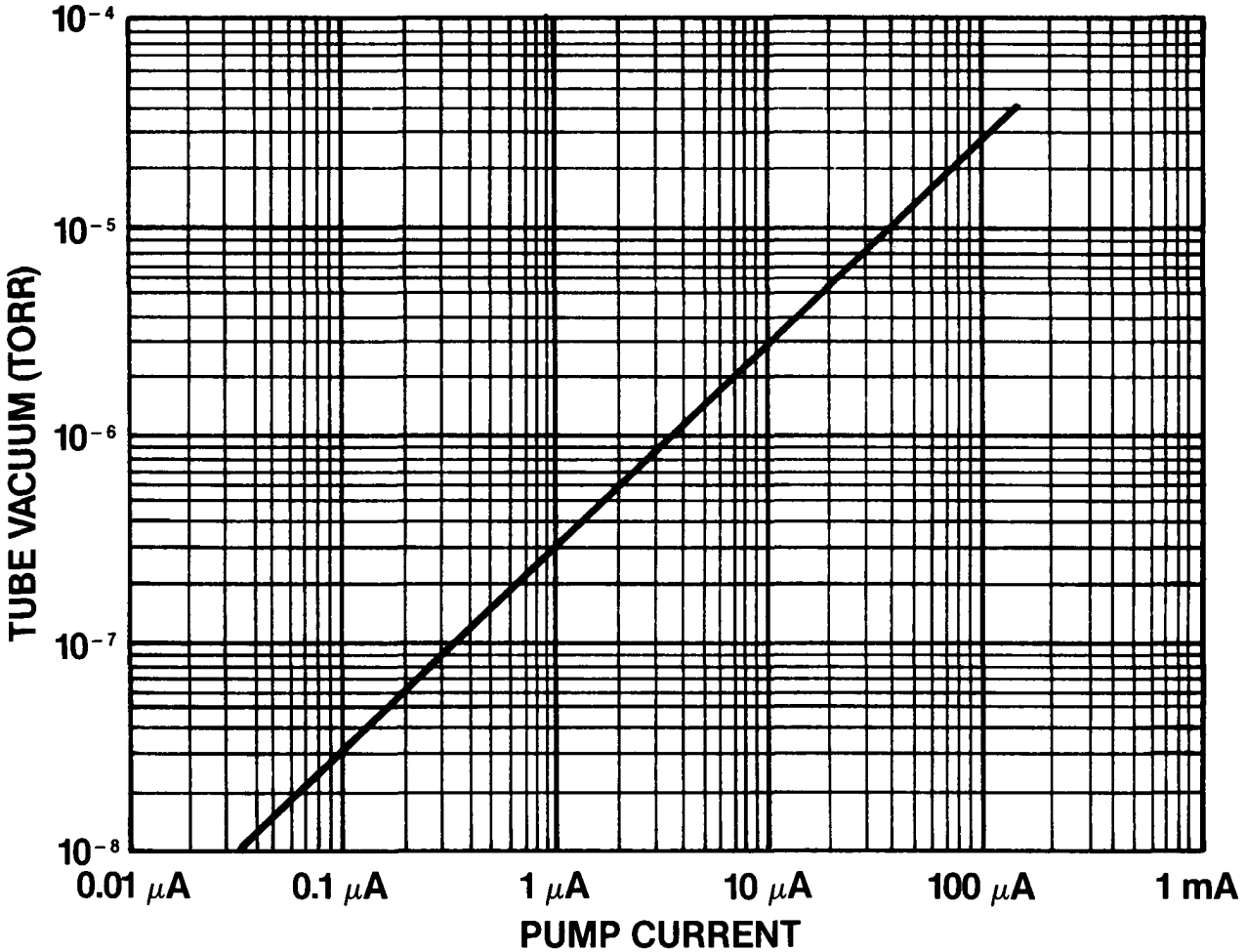

Figure 1 - Tube Vacuum VS Ion Current

OPERATING HAZARDS

PROPER USE AND SAFE OPERATING PRACTICES WITH RESPECT TO POWER TUBES ARE THE RESPONSIBILITY OF EQUIPMENT MANUFACTURERS AND USERS OF SUCH TUBES. ALL PERSONS WHO WORK WITH OR ARE EXPOSED TO POWER TUBES OR EQUIPMENT WHICH UTILIZES SUCH TUBES MUST TAKE PRECAUTIONS TO PROTECT THEMSELVES AGAINST POSSIBLE SERIOUS BODILY INJURY. DO NOT BE CARELESS AROUND SUCH PRODUCTS.

The operation of this tube may involve the following hazards, any one of which, in the absence of safe operating practices and precautions, could result in serious harm to personnel:

a. HIGH VOLTAGE - Normal operating voltages can be deadly. Remember that HIGH VOLTAGE CAN KILL.

b. RF RADIATION - Exposure to strong rf fields should be avoided, even at relatively low frequencies. CARDIAC PACEMAKERS MAY BE EFFECTED.

c. X-RADIATION - High voltage tubes can produce dangerous and possibly fatal X-Rays.

d. LOW-VOLTAGE HIGH-CURRENT CIRCUITS - Personal jewelry, such as rings, should not be worn when working with filament contacts or connectors as a short circuit can produce very high current and melting, resulting in severe burns.

e. HOT WATER - Water used to cool tubes may reach scalding temperatures. Touching or rupture of the cooling system can cause serious burns.

f. HOT SURFACES - Surfaces of tubes can reach temperatures of several hundred Degrees C and cause serious burns if touched for several minutes after all power is removed.

Please review the detailed operating hazards sheet enclosed with each tube, or request a copy from: VARIAN EIMAC, Power Grid Tube Division, 301 Industrial Way, San Carlos CA 94070.

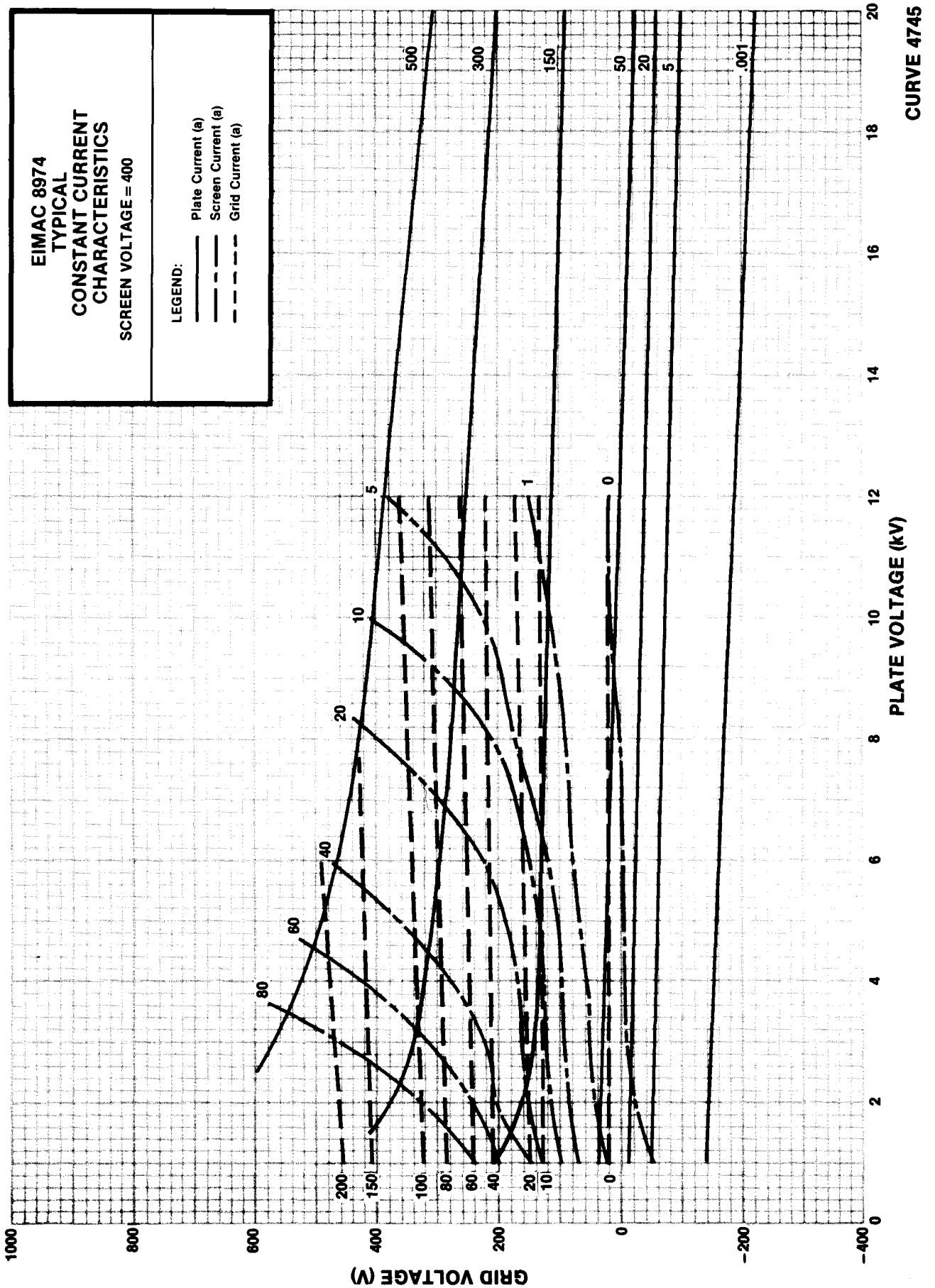
EIMAC 8974
TYPICAL
CONSTANT CURRENT
CHARACTERISTICS
SCREEN VOLTAGE = 400
LEGEND:
Plate Current (a)
Screen Current (a)
Grid Current (a)
GRID VOLTAGE (V)
PLATE VOLTAGE (kV)
CURVE 4745

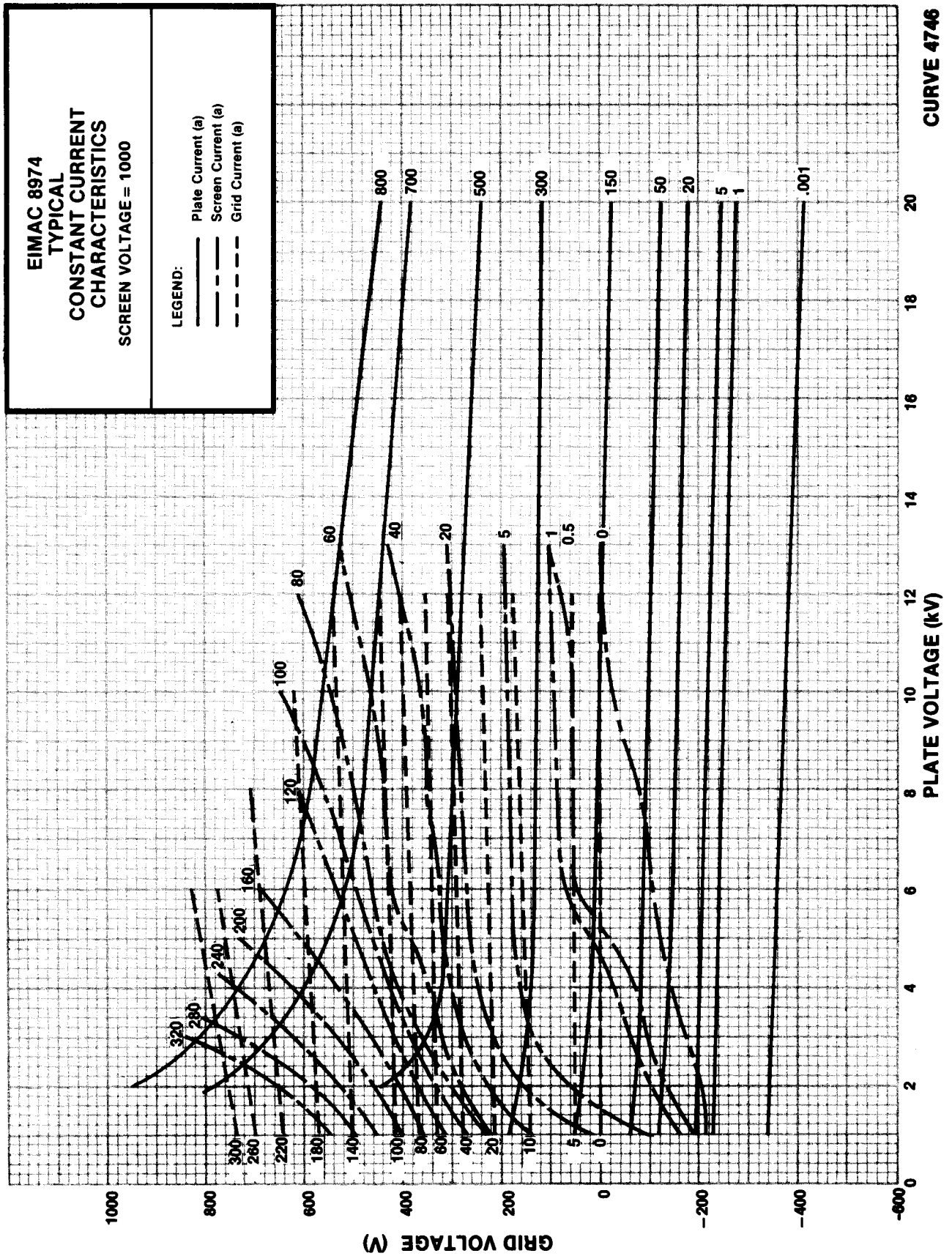
EIMAC 8974
TYPICAL
CONSTANT CURRENT
CHARACTERISTICS
SCREEN VOLTAGE = 1000
LEGEND:
Plate Current (a)
Screen Current (a)
Grid Current (a)
CURVE 4746
PLATE VOLTAGE (kV)
GRID VOLTAGE (V)
0
2
4
6
8
10
12
14
16
18
20
1000
800
600
400
200
0
-200
-400
-600
800
700
500
300
150
50
20
5
1
.001
60
40
20
5
1
0.5
0
100
80
120
160
200
240
280
320
300
260
220
180
140
100
80
60
40
20
10
5
0

EIMAC® 8974

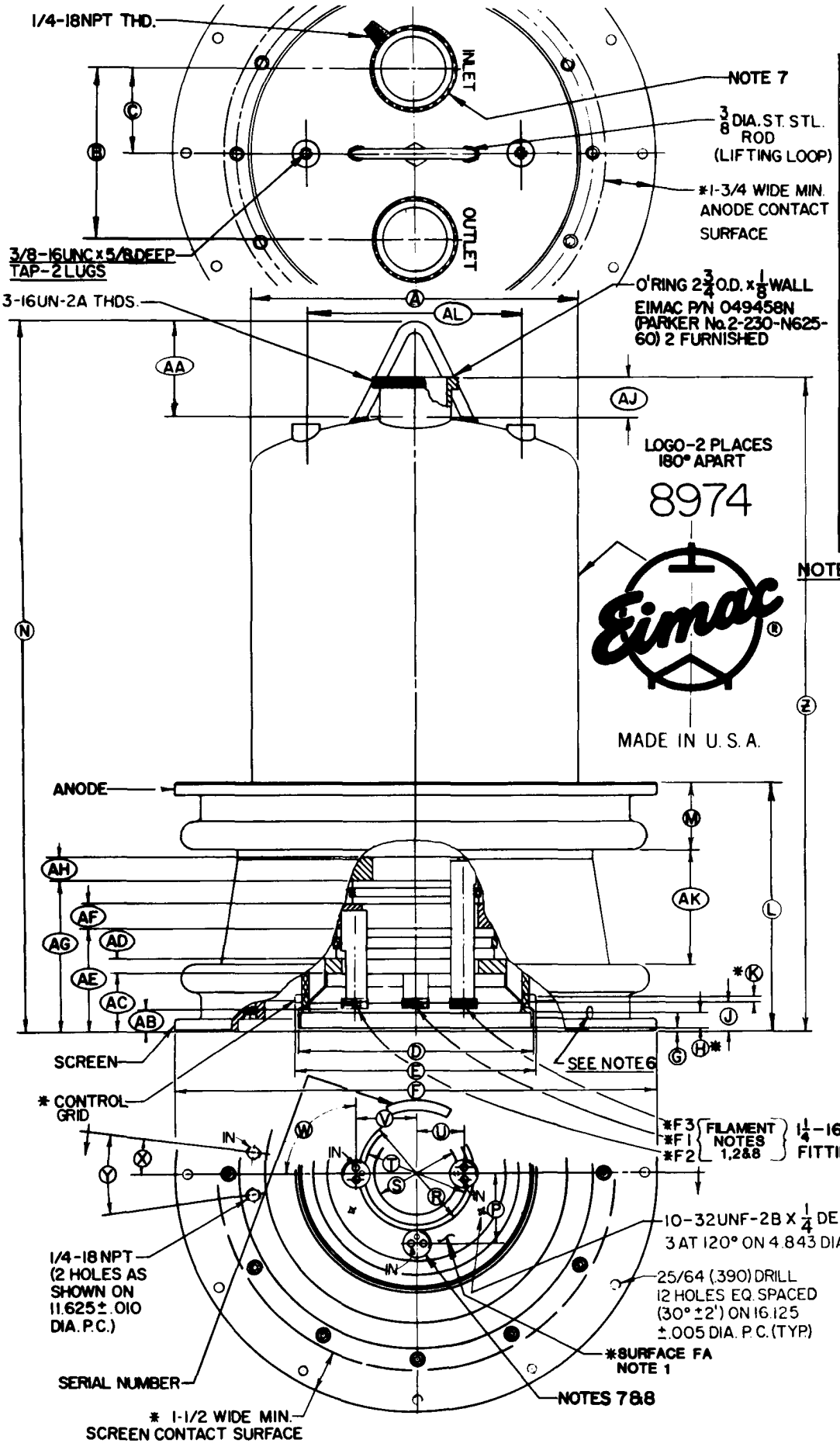

DIMENSIONAL DATA						
	INCHES			MILLIMETERS		
DIM	MIN	MAX	REF	MIN	MAX	REF
A	11.440	11.560		290.58	293.62	
B			6.000			152.40
C			3.000			76.20
D	8.235	8.265		209.17	209.93	
E	8.485	8.525		215.52	216.54	
F	16.970	17.030		431.04	432.56	
G			.025			.635
H	.310			7.87		
J	.900	1.000		22.86	25.40	
K	.180			4.57		
L	8.700	8.900		220.98	226.06	
M			2.375			60.32
N			25.312			642.92
P			2.500			63.50
R	4.113	4.137		104.47	105.08	
S	2.988	3.012		75.89	76.50	
T	3.675	3.699		93.34	93.96	
U			1.887			47.85
V			2.156			54.76
W			90°			
X			7-1/2°			
Y			15°			
Z	22.857	23.305		580.57	591.95	
AA			3.575			90.80
AB			.720			18.29
AC	1.950	2.100		49.53	53.34	
AD	.450			11.43		
AE	3.660	3.680		92.97	93.47	
AF	.725			18.42		
AG	5.300	5.450		134.62	138.43	
AH	.725			18.42		
AJ			1.375			34.92
AK			4.095			103.96
AL			8.000			203.20

NOTES:

1. CIRCUIT RETURN MAY BE MADE TO FA BY SK-2315 CONNECTOR.
2. MATE WITH EIMAC CONNECTOR SK-2310
3. D C RETURN SHOULD BE MADE TO F2
4. REF. DIMENSIONS ARE FOR INFO. ONLY & ARE NOT REQUIRED FOR INSPECTION PURPOSES.
5. (*) CONTACT SURFACES
6. 1/4 DIA. WATER DRAIN HOLE - 3 PLACES.
7. WATER INLET ON JACKET & WATER FITTING F1, ARE TO BE IN LINE & ON SAME SIDE OF TUBE.
8. A TUBE OF ANTI-SEIZE THREAD LUBRICANT IS PROVIDED WITH TUBE TO PREVENT GALLING OF FILAMENT CONNECTOR THREADS, SEE INSTR. SHEET E14-1.2 ATTACHED TO TUBE