8954

TECHNICAL DATA

VOLTAGE REGULATOR
OR SWITCH TUBE
POWER TETRODE

The EIMAC 8954 is designed for switch-tube (or modulator) and voltage regulator service, with anode current up to 8 amperes with short pulses (to 2 microseconds) and derated values of anode current at longer pulse lengths.

The tube has an oxide cathode and all electrical connections are made to solder tabs which are integral to the tube elements.

The 8954 is supplied bare-anode and is intended to be cooled by heat sink, or liquid immersion, or a combination, and is nominally rated for 600 watts of anode dissipation.

The tube is rated to operate at 5.5 kVdc in air, at sea level, or 7.5 kVdc in an insulating oil environment. The tube is designed to withstand brief fault conditions which may raise the instantaneous anode voltage to 12 kv.

GENERAL CHARACTERISTICS[1]

ELECTRICAL

Cathode: Oxide Coated, Unipotential	
Heater	6.0 V
Current	5.6 A
Cathode Heating Time (Minimum)	2.0 Min.
Direct Interelectrode Capacitance (Grounded Cathode)[2]	
Cin	50 pF
Cout	6.2 pF
Cgp	0.14 pF

1. Characteristics and operating values are based upon performance tests. These figures may change without notice as the result of additional data or product refinement. EIMAC Division of Varian should be consulted before using this information for final equipment design.

2. Capacitance values are for a cold tube as measured in a special shielded fixture in accordance with Electronic Industries Association Standard RS-191.

MECHANICAL

Base	Special, With Solder-Tab Terminals
Operating Position	Any
Maximum Operating Temperatures: Anode Core & Ceramic/Metal Seals	250°C
Cooling	Heat Sink/Liquid Immersion

(Effective 6-1-74) © 1974 by Varian Printed in U.S.A.

Maximum Overall Dimensions:

Length	2.52 In; 64.01 mm
Diameter	1.77 In; 44.96 mm
Net Weight	6.0 Oz; 170 gms

RANGE VALUES FOR EQUIPMENT DESIGN

	Min.	Max.	
Heater: Current at 6.0 Volts	5.0	6.3	A
Cathode Warmup Time	120	---	Sec
Interelectrode Capacitances (grounded cathode circuit)[1]			
Cin	40.0	60.0	pF
Cout	5.2	7.2	pF
Cgp	----	0.15	pF

1. Capacitance values are for a cold tube as measured in a special shielded fixture in accordance with Electronic Industries Association Standard RS-191.

PULSE MODULATOR OR SWITCH TUBE SERVICE

ABSOLUTE MAXIMUM RATINGS:

	In Air	In Oil	
HEATER VOLTAGE	6.0±5%	6.0±5%	VOLTS
DC PLATE VOLTAGE	5.5	7.5	KILOVOLTS
PEAK POSITIVE PLATE VOLTAGE	12	12	KILOVOLTS
DC SCREEN VOLTAGE	800	800	VOLTS
DC GRID VOLTAGE	-200	-200	VOLTS

	In Air	In Oil	
PEAK PLATE CURRENT[1]	8.0	8.0	AMPERES
PULSE LENGTH AND DUTY[1]	See Derating Chart		
PLATE DISSIPATION[2]	600	600	WATTS
SCREEN DISSIPATION	15	15	WATTS
GRID DISSIPATION	4	4	WATTS

1. Pulse length, peak current, and duty are inter-related. See DERATING CHART.
2. 600 W nominal; capability is dependent on cooling technique and design.

APPLICATION

MECHANICAL

MOUNTING - The 8954 may be operated in any position, with mounting normally controlled by the anode heat-sink configuration and location. No socket is required since all electrical connections are made to solder tabs which are integral to the tube elements.

COOLING - The tube is designed for use in a conduction-cooled or liquid-immersion-cooled system, where tube anode heat is transferred to a heat sink or the liquid dielectric coolant. Anode dissipation is normally limited only by the allowable temperature rise for the anode ceramic/metal seal and the anode core. In all cases, however, the cooling system must maintain the anode and ceramic/metal seal temperatures below 250°C, and in cases where long life and consistent performance are factors, cooling in excess of minimum requirements is normally beneficial.

In an air mounted heat-sink system, intimacy of contact between the anode surface and the sink is a factor which will effect heat transfer, and the designer is encouraged to use temperature-sensitive paint or other temperature-sensing devices in connection with any equipment design before the layout is finalized. In such a system, some air circulation around the base of the tube may also be required to maintain these ceramic/metal seals and the connection points at the solder tabs within the allowable temperature range.

ELECTRICAL

HEATER/CATHODE OPERATION - The rated heater voltage for the 8954 is 6.0 volts, as measured at the base of the tube, and variations should be restricted to plus or minus 0.3 volt for long life and consistent performance. One side of the heater is internally connected to the cathode. Heater voltage should be applied for a minimum of two minutes before high voltage is applied to the other tube elements, to allow the cathode to reach operating temperature.

ANODE CURRENT - For pulse service, either as a switch tube or modulator, or for voltage regulator applications, an anode current (during the

pulse) of 8 amperes is available with short pulses (up to 2 μs). Peak current capability, pulse length, and duty factor are inter-related and for pulse durations longer than 2 μs the DERATING CHART should be consulted. For very long pulses (1 millisecond or longer) or pure dc service, the anode current should be limited to 0.6 ampere.

HIGH VOLTAGE - For air operation, anode voltage should not exceed 5.5 kVdc at sea level. This value allows some safety factor, but at higher altitudes a reduction in voltage may be required to preclude the possibility of external tube flash-over, and the external insulating surfaces of the tube must be kept clean and free of dirt or any accumulation of grime to minimize the possibility of external breakdown. When the tube is immersed in a liquid dielectric coolant with suitable insulating properties, the allowable anode voltage is 7.5 kVdc at any altitude.

The operating voltages for this tube must be considered as potentially lethal and the equipment must be designed properly and operating precautions must be followed. The equipment must include safety enclosures for the high-voltage circuits and terminals, with interlock switches to open the primary circuits of the power supplies and to discharge high voltage condensers whenever access doors or covers are opened. Interlock switches must not be bypassed or "cheated" to allow operation with access doors open. Always remember that HIGH VOLTAGE CAN KILL .

PLATE SURGE-LIMITING IMPEDANCE - Beam-power tetrodes, such as the 8954, are built with closely spaced electrodes. This results in high voltage gradients even at normal operating voltages. A high-energy arcover between electrodes may be destructive, and therefore a series impedance in the anode lead is recommended, or the anode supply should be designed so that it has sufficient self impedance, to limit the short-circuit current to 10 times the maximum pulse-current rating. Normal overload protection techniques should also be used, not only in the anode circuit but also in the screen grid circuit, to prevent tube damage in the event of a fault condition.

GRID OPERATION - The maximum rated dc grid bias voltage is -200 Vdc and the maximum grid dissipation rating is 4 watts. In normal applications the grid dissipation will not approach the maximum rating.

SCREEN OPERATION - The maximum rated power dissipation for the screen grid is 15 watts, and the average screen input power should be kept below this level.

It is a normal characteristic of most tetrodes for the screen current to instantaneously reverse with some combinations of element voltages and currents. The screen power supply should be designed with this in mind so that the correct operating voltage will be maintained on the screen under all conditions. A current path from screen to cathode must be provided by a bleeder resistor or shunt regulator connected between screen and cathode. A series regulator circuit can be used only when an adequate bleeder resistor is provided.

Over-current protection should be provided for the screen and it may be desirable to interlock the screen power supply so that plate voltage must be on before screen voltage can be applied.

PLATE OPERATION - The anode of the 8954 is nominally rated for 600 watts of dissipation capability. This capability is dependent on a properly designed heat sink, or the use of liquid-immersion cooling with a dielectric fluid of suitable characteristics, or a combination of both. Average anode dissipation may be calculated as the product of pulse anode current, pulse tube-voltage drop during conduction, and the duty factor. Actual dissipation may often exceed the calculated value if pulse rise and fall times are appreciable compared to pulse duration. This occurs because long rise and fall times slow down the plate voltage swing and allow plate current to flow for longer periods in the high tube-voltage-drop region.

SPECIAL APPLICATION - If it is desired to operate this tube under conditions widely different from those listed here, write to: Power Grid Tube Division, EIMAC Division of Varian, 301 Industrial Way, San Carlos, California 94070, for information and recommendations.

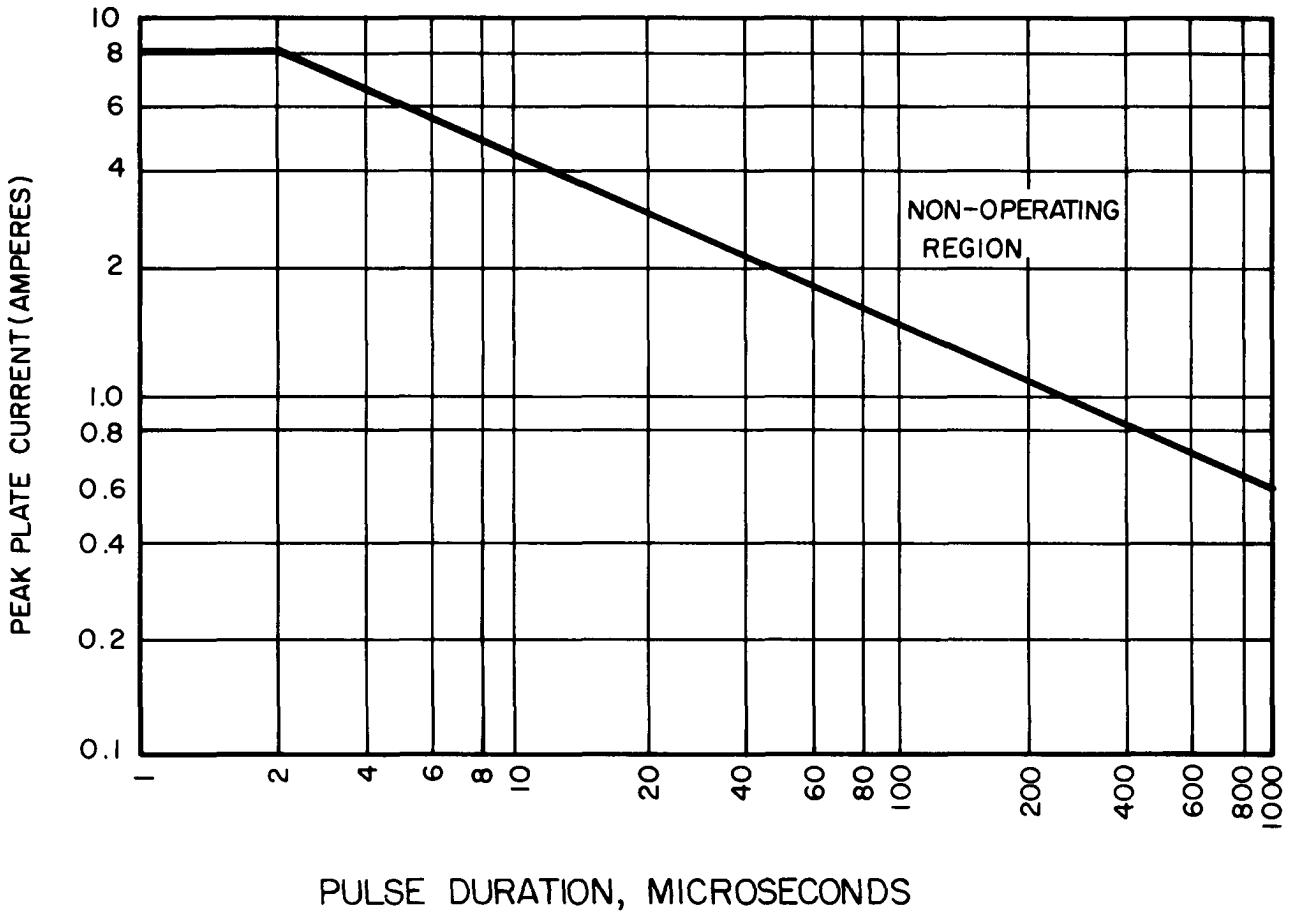

PEAK (PULSE) PLATE CURRENT CAPABILITY IS DEPENDENT ON PULSE DURATION (tp) AND DUTY FACTOR (Du). MAXIMUM PEAK PLATE CURRENT FOR A GIVEN PULSE DURATION IS SHOWN. MAXIMUM DUTY MAY THEN BE DERIVED FROM THE RELATIONSHIP:

$$0.6 = ib\sqrt{Du}$$

PULSE DE-RATING DATA, TYPE 8954

DIMENSIONAL DATA						
DIM	INCHES			MILLIMETERS		
	MIN.	MAX.	REF.	MIN.	MAX.	REF.
A	- -	- -	2.500	- -	- -	63.50
B	1.298	1.302	- -	32.96	33.07	- -
C	0.559	0.573	- -	14.19	14.55	- -
D	- -	0.485	- -	- -	12.31	- -
E	- -	2.120	- -	- -	53.84	- -
F	- -	- -	0.887	- -	- -	22.52
G	0.355	0.395	- -	9.01	10.03	- -
H	0.230	0.270	- -	5.84	6.85	- -
J	1.305	1.325	- -	33.14	33.65	- -
K	1.540	1.580	- -	39.11	40.13	- -
L	1.720	1.770	- -	43.68	44.95	- -
M	10°	20°	- -	10°	20°	- -
N	40°	50°	- -	40°	50°	- -
P	0.700	- -	- -	17.78	- -	- -
R	0.030R	0.050R	- -	0.76R	1.27R	- -
S	0.090	0.110	- -	2.28	2.79	- -
T	- -	1.130	- -	- -	28.70	- -
U	0.230	0.270	- -	5.84	6.85	- -

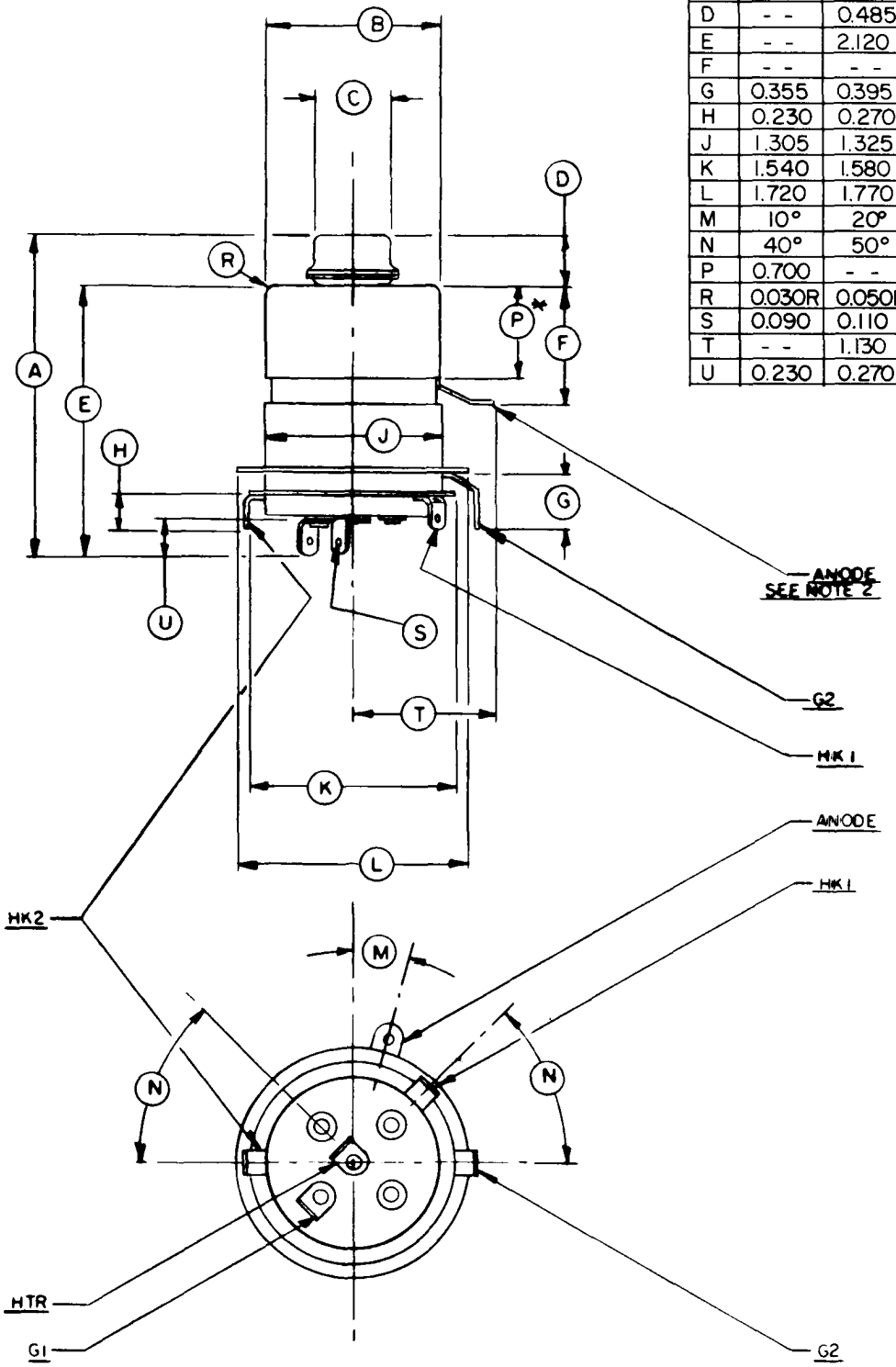

NOTES:

1. REF DIMENSIONS ARE FOR INFO ONLY & ARE NOT REQUIRED FOR INSPECTION PURPOSES.
2. ANODE TAB IS ROTATED 75°. SEE BOTTOM VIEW FOR TAB ORIENTATION.
3. (*) CONTACT SURFACE.

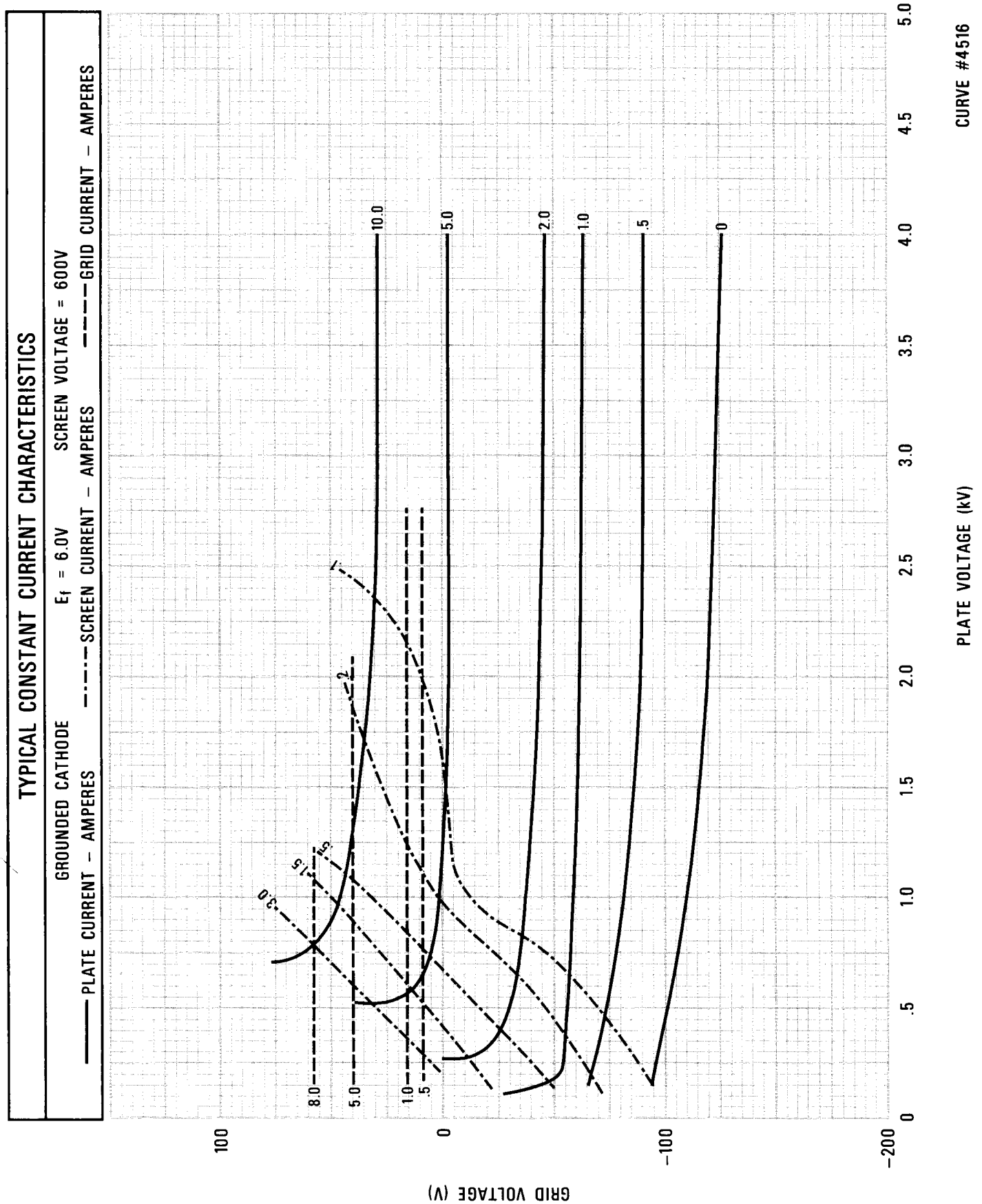
TYPICAL CONSTANT CURRENT CHARACTERISTICS
GROUNDED CATHODE
E_f = 6.0V
SCREEN VOLTAGE = 600V
PLATE CURRENT – AMPERES
SCREEN CURRENT – AMPERES
GRID CURRENT – AMPERES
10.0
5.0
2.0
1.0
.5
0
8.0
5.0
1.0
.5
3.0
1.5
.5
2
1
100
0
−100
−200
GRID VOLTAGE (V)
0
.5
1.0
1.5
2.0
2.5
3.0
3.5
4.0
4.5
5.0
PLATE VOLTAGE (kV)

CURVE #4516

TYPICAL CONSTANT CURRENT CHARACTERISTICS

GROUNDED CATHODE E_f = 6.0V SCREEN VOLTAGE = 400V

——— PLATE CURRENT – AMPERES —·—·— SCREEN CURRENT – AMPERES – – – – GRID CURRENT – AMPERES

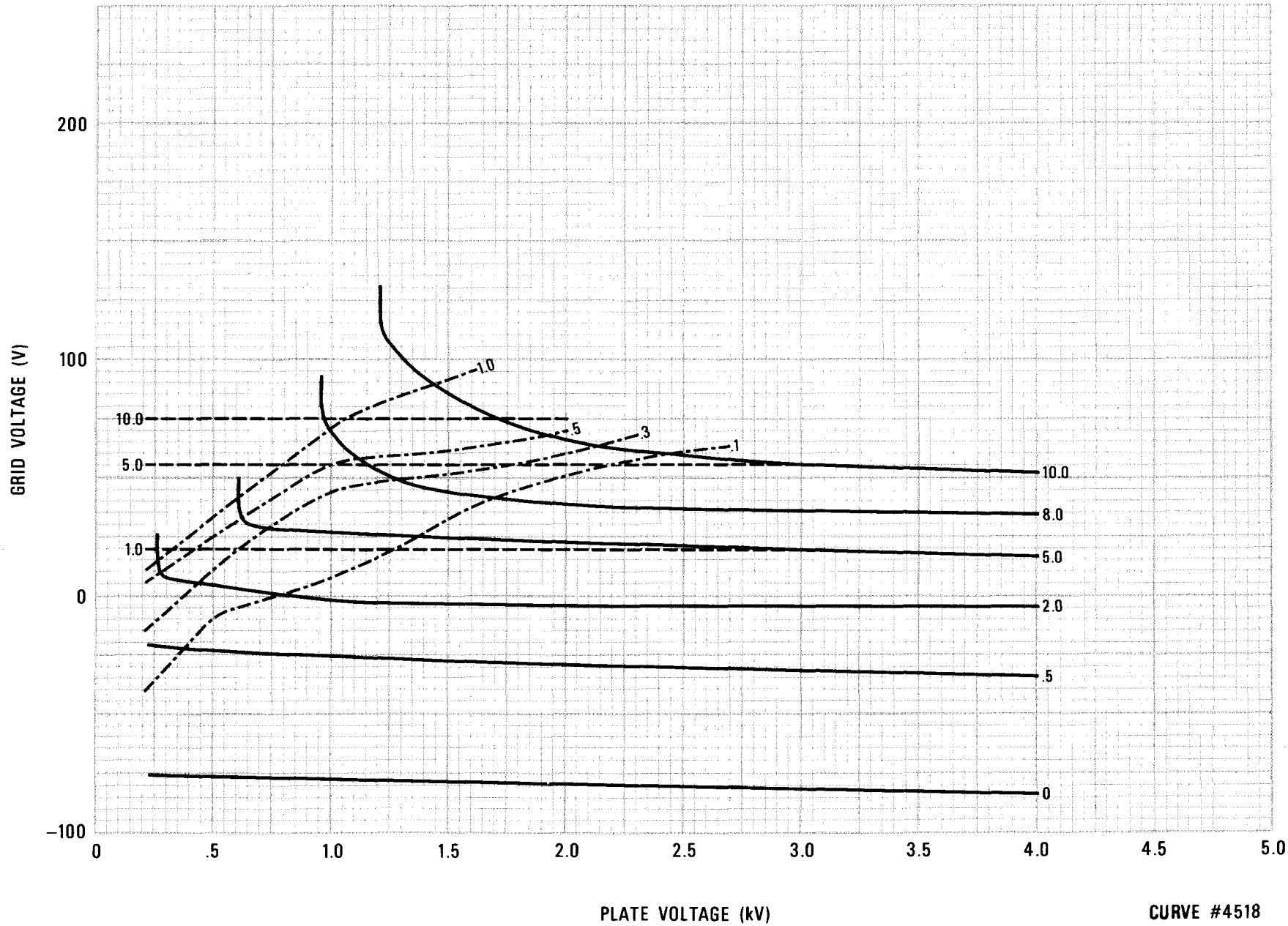

CURVE #4518

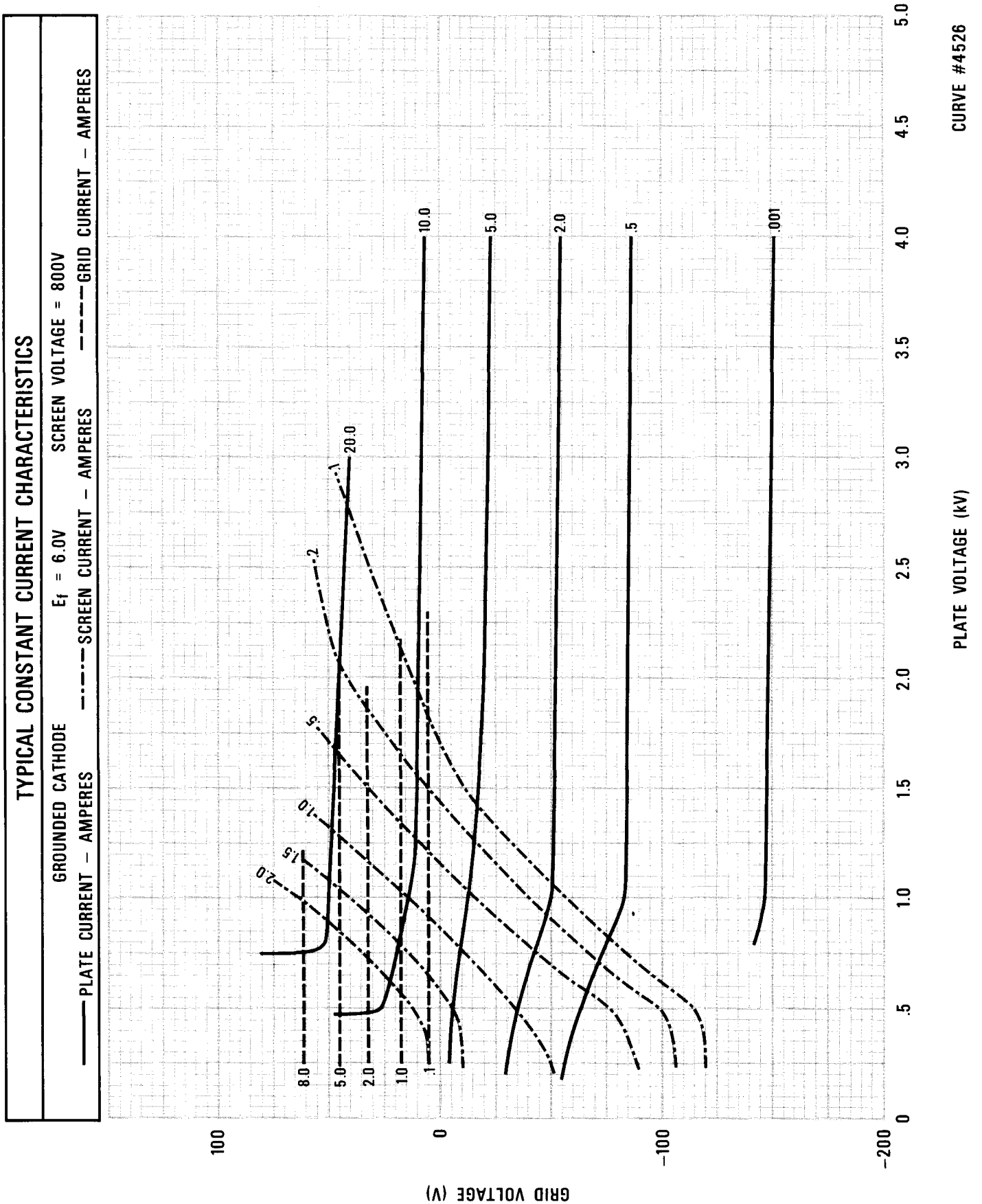
TYPICAL CONSTANT CURRENT CHARACTERISTICS
GROUNDED CATHODE
E_f = 6.0V
SCREEN VOLTAGE = 800V
PLATE CURRENT – AMPERES
SCREEN CURRENT – AMPERES
GRID CURRENT – AMPERES
GRID VOLTAGE (V)
PLATE VOLTAGE (kV)
100
0
–100
–200
0
.5
1.0
1.5
2.0
2.5
3.0
3.5
4.0
4.5
5.0
8.0
5.0
2.0
1.0
.1
20.0
.1
.2
.5
1.0
1.5
2.0
10.0
5.0
2.0
.5
.001

CURVE #4526