TECHNICAL DATA

8938
UHF
HIGH-MU
POWER TRIODE

The **EIMAC 8938** is a rugged coaxial-base ceramic and metal power triode designed for use as a cathode driven Class AB_2 or Class C amplifier.

It is recommended for VHF or UHF service as a linear amplifier, power amplifier or pulse amplifier. Linearity and power gain are both excellent due to the low ratio of grid to plate current, and the relatively high amplification factor. Low grid interception of available emission current is due to the beam forming geometry of the special grid and cathode design.

The 8938 is a practical size for use in ground based or mobile equipment in CW or PEP power levels of 1 to 2.5 kW. It is useful at frequencies higher than the upper frequency of maximum ratings, 500 MHz.

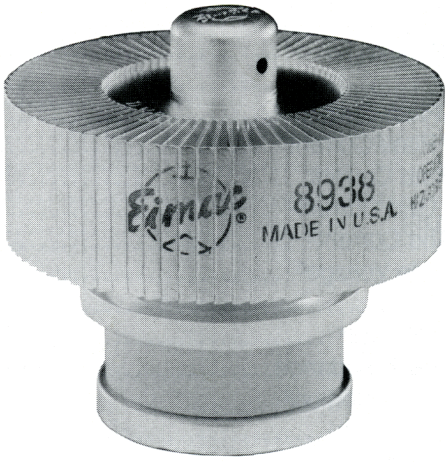

GENERAL CHARACTERISTICS[1]

ELECTRICAL

Cathode: Oxide Coated, Unipotential

Heater: Voltage	5.0 ± 0.25 Volts
Current @ 5.0 Volts	10.5 Amperes
Transconductance (Average):	
I_b = 1.0 Adc	55,000 μmhos
Amplification Factor (Average)	125
Direct Interelectrode Capacitance (Grounded Grid)[2]	
Cin	39 pF
Cout	13 pF
Cgp	0.14 pF
Ck-htr	12.8 pF
Frequency of Maximum Rating (CW)	500 MHz

[1]Characteristics and operating values are based upon performance tests. These figures may change without notice as the result of additional data or product refinement. **Varian EIMAC** should be consulted before using this information for final equipment design.

[2]Capacitance values are for a cold tube as measured in a special shielded fixture.

varian
eimac salt lake division

1678 South Pioneer Road / Salt Lake City, Utah 84104 / (801) 972-5000

Effective 3/15/89

Printed in USA

RADIO FREQUENCY LINEAR AMPLIFIER CATHODE DRIVEN (Class AB_2)

TYPICAL OPERATION
(Frequencies to 30 MHz)
Class AB_2 Cathode Driven, Peak Envelope or
Modulation Crest Conditions

Plate Voltage	3500 Vdc
Grid Voltage[1]	-20 Vdc
Zero-Signal Plate Current	300 mAdc
Single-Tone Plate Current	970 mAdc
Two-Tone Plate Current	715 mAdc
Single-Tone Grid Current[3]	39 mAdc
Two-Tone Grid Current[3]	12 mAdc
Peak rf Cathode Voltage[3]	71 Volts
Driving Power[3]	50 Watts
Useful Output Power[4]	2030 Watts
Resonant Load Impedance	2200 Ohms
Intermodulation Distortion[2]	
3rd Order Products	-44 dB
5th Order Products	-44 dB

[1]Positive cathode bias provided by zener diode.
[2]The intermodulation distortion products are referenced against one tone of a two equal tone signal.
[3]Approximate value.
[4]Delivered to the load.

ABSOLUTE MAXIMUM RATINGS

DC Plate Voltage	4000 Volts
DC Plate Current	1.0 Ampere
Plate Dissipation	1500 Watts
Grid Dissipation	25 Watts

RADIO FREQUENCY POWER AMPLIFIER (Class B or C)

TYPICAL OPERATION
(Cathode Driven Amplifier)

Frequency of Operation	400 MHz
Heater Voltage	4.3 Volts
DC Plate Voltage	3000 Volts
DC Grid Voltage	-31 Volts
DC Plate Current	1.0 Ampere
DC Grid Current	5 mA
Measured Driving Power	83 Watts
Useful Output Power	1570 Watts
Power Gain	12.8 dB

ABSOLUTE MAXIMUM RATINGS

DC Plate Voltage	4000 Volts
DC Plate Current	1.0 Ampere
Plate Dissipation	1500 Watts
Grid Dissipation	25 Watts

MECHANICAL

Maximum Overall Dimensions:
- Length ..... 3.57 in; 91.00 mm
- Diameter ..... 3.38 in; 85.85 mm

Net Weight ..... 25 oz.; 709 gm
Operating Position ..... Any

Maximum Operating Temperature:
- Ceramic/Metal Seals ..... 250°C
- Anode Core ..... 250°C

Cooling ..... Forced Air
Base ..... Coaxial
Socket (Grounded Grid) ..... EIMAC SK-2220

APPLICATION

MECHANICAL

MOUNTING - The EIMAC 8938 may be mounted in any position.

SOCKET - The EIMAC SK-2220 socket is designed for use with the 8938 tube, making contact to the two heater terminals, the cathode, and the grid terminal. The grid is grounded to the frame of the socket.

Individual contact collets are also available from EIMAC to fit the 8938 as follows:

TUBE ELEMENT	EIMAC PART NUMBER
Anode	135304
Grid	135305
Cathode	135306
Heater	135307
Heater (Center Pin)	135310

These collets are described by EIMAC drawing SK-2221-60.

COOLING - The maximum temperature limit for all external tube surfaces and the anode core is 250°C. Tube life is prolonged, however, if these areas are maintained at a lower temperature. The cooling data shown is for the anode cooler only and the flow rates indicated will hold tube temperature below 225°C with 50°C ambient temperature at sea level at low frequencies. At frequencies above 30 MHz, or at higher altitudes, the air quantity must be increased. A small amount of additional cooling air is required around the base of the tube to maintain seal and envelope temperatures in this area within ratings.

Anode Dissipation Watts	SEA LEVEL		10,000 FEET	
	Air Flow CFM	Pressure Drop Inches	Air Flow CFM	Pressure Drop Inches
500	12.8	.08	18.7	.11
1000	27.6	.24	40.0	.35
1500	50.0	.70	73.0	1.01

Note: An allowance has been made for 25 watts of grid dissipation and 50 watts of heater power.

ELECTRICAL

FILAMENT OPERATION - Rated filament voltage for the 8938 is 5.0 Volts. For CW operation at the higher end of the frequency range of the 8938, it is advisable to reduce the heater voltage by a small percentage. For a CW or average power output of 1 kW or more at 400 MHz, it is recommended that heater voltage be reduced to 4.3 Volts. At frequencies between 400 and 200 MHz, nominal heater voltage, for the power level above, should be obtained from a straight line curve defined by 4.3 Volts at 400 MHz and 5.0 Volts at 200 MHz.

In equipment intended for a broad range of frequencies, a fixed compromise heater voltage is suggested. This may be the lowest heater voltage which provides adequate cathode emission current at the lower end of the frequency range, and should be between 4.3 and 5.0 Volts.

GRID OR CATHODE BIAS - It is convenient in linear amplifier service to use a zener diode or series of zener

diodes in the cathode circuit if bias is required. The power loss is small because linear amplifier bias will generally be less than 25 Volts. Conventional grid bias sources may be used for CW or pulse applications.

UHF OPERATION - The 8938 provides very high gain at UHF with simple cavity designs, as a result of beam focusing action of a series of strip electron guns in the cathode grid region, which produces very high mu with unusually low grid interception.

Use of a high mu triode in the cathode driven configuration at UHF simplifies circuitry in many ways.

INTERELECTRODE CAPACITANCE - The actual internal interelectrode capacitance of a tube is influenced by many variables in most applications, such as stray capacitance to the chassis, capacitance added by the socket used, stray capacitance between the tube terminals, and wiring effects. To control the actual capacitance values within the tube, as the key component involved, the industry and military services use a standard test procedure as described in Electronic Industries Association Standard RS-191. This requires the use of specially constructed test fixtures which effectively shield all external tube terminals or leads from each other and eliminates any capacitance reading to "ground". The test is performed on a cold tube. Other factors being equal, controlling internal tube capacitance in this way normally assures good interchangeability of tubes over a period of time, even when the tube may be made by different manufacturers. The capacitance values shown in the manufacturer's technical data, or test specifications, normally are taken in accordance with Standard RS-191.

The equipment designer is therefore cautioned to make allowance for the actual capacitance values which will exist in any normal application. Measurements should be taken with the socket and mounting which represent approximate final layout if capacitance values are highly significant in the design.

FAULT PROTECTION - It is good practice to protect the tube from internal damage caused by an internal arc which may occur at high anode voltage.

RF RADIATION - Exposure to strong rf fields should be avoided, even at relatively low frequencies. The dangers of rf radiation are more severe at UHF and microwave frequencies and can cause serious bodily and eye injuries. CARDIAC PACEMAKERS MAY BE AFFECTED.

HOT SURFACES - When the tube is used in air and air cooled, external surfaces of the tube may reach temperatures up to 200 degrees C and higher. In addition to the anode, the cathode insulator and cathode/heater surfaces may remain hot for an extended time after the tube is shut off. To prevent serious burns, take care to avoid any bodily contact with these surfaces both during, and for a reasonable cool down period after, tube operation.

CAUTION - HIGH VOLTAGE - *Operating voltage for the 8938 can be deadly, so the equipment must be designed properly and operating precautions must be followed. Design equipment so that no one can come in contact with high voltages. All equipment must include safety enclosures for high voltage circuits and terminals, with interlock switches to open the primary circuits of the power supply and to discharge high voltage capacitors whenever access doors are opened. Interlock switches must not be bypassed or "cheated" to allow operation with access doors open. Always remember that* ***HIGH VOLTAGE CAN KILL.***

SPECIAL APPLICATIONS - If it is desired to operate this tube under conditions different from those given here, write to the Power Grid Tube Marketing Department, Varian EIMAC, 1678 South Pioneer Road, Salt Lake City, UT 84104, for information and recommendations.

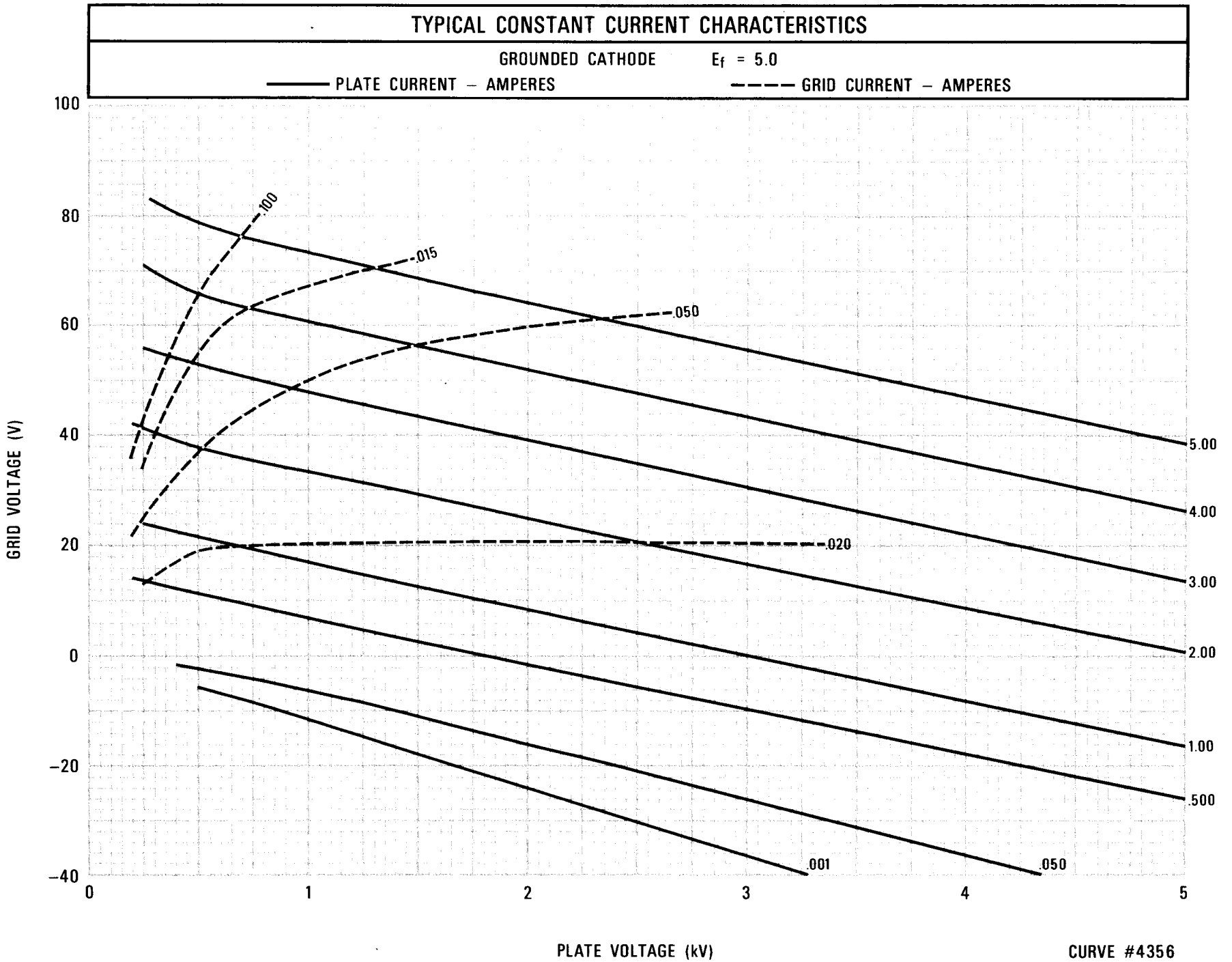
TYPICAL CONSTANT CURRENT CHARACTERISTICS
GROUNDED CATHODE
Ef = 5.0
PLATE CURRENT – AMPERES
GRID CURRENT – AMPERES
GRID VOLTAGE (V)
100
80
60
40
20
0
−20
−40
0
1
2
3
4
5
PLATE VOLTAGE (kV)
.100
.015
.050
.020
.001
.050
5.00
4.00
3.00
2.00
1.00
.500
CURVE #4356

TYPICAL CONSTANT CURRENT CHARACTERISTICS

GROUNDED GRID E_f = 5V

——— PLATE CURRENT – AMPERES – – – – GRID CURRENT – AMPERES

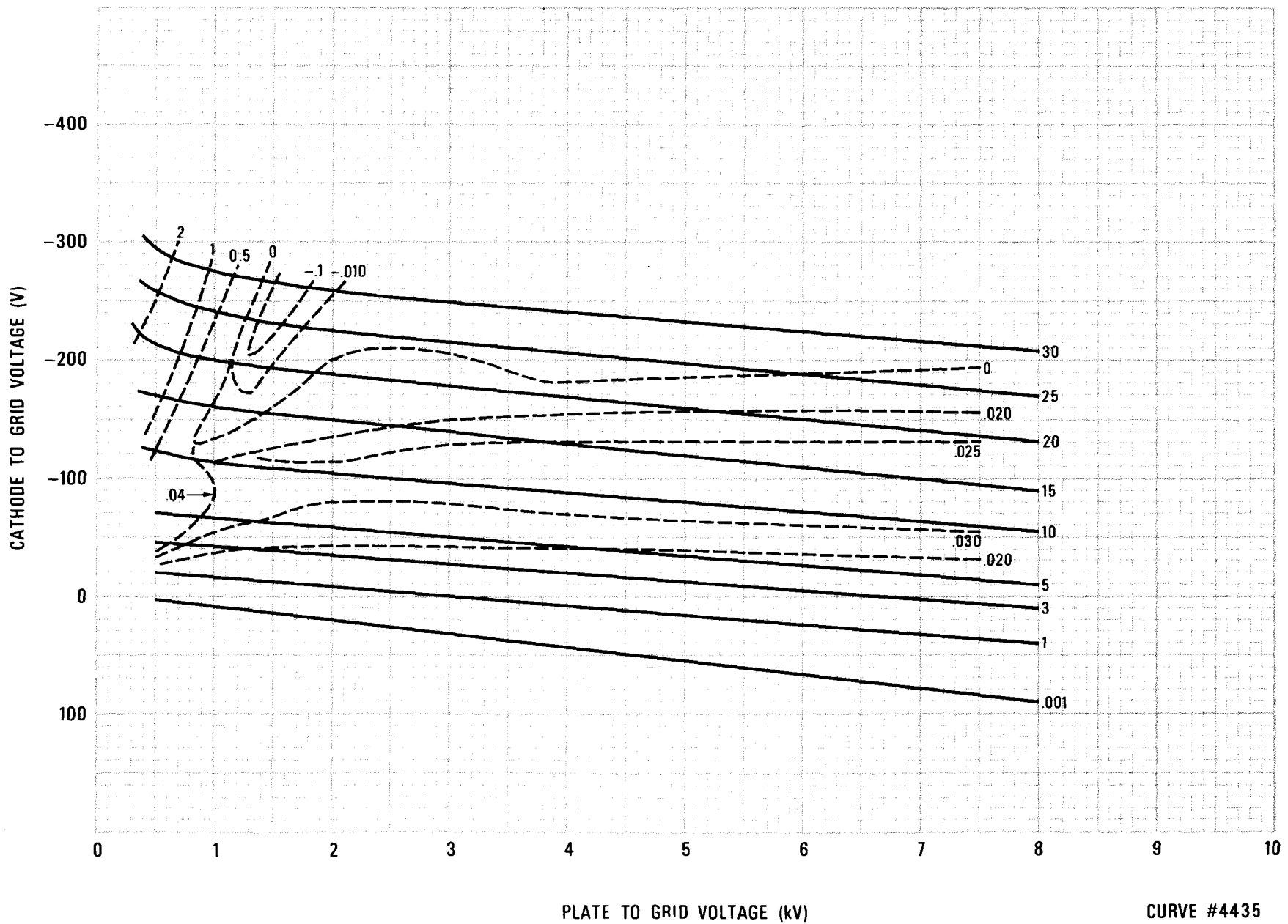

CURVE #4435

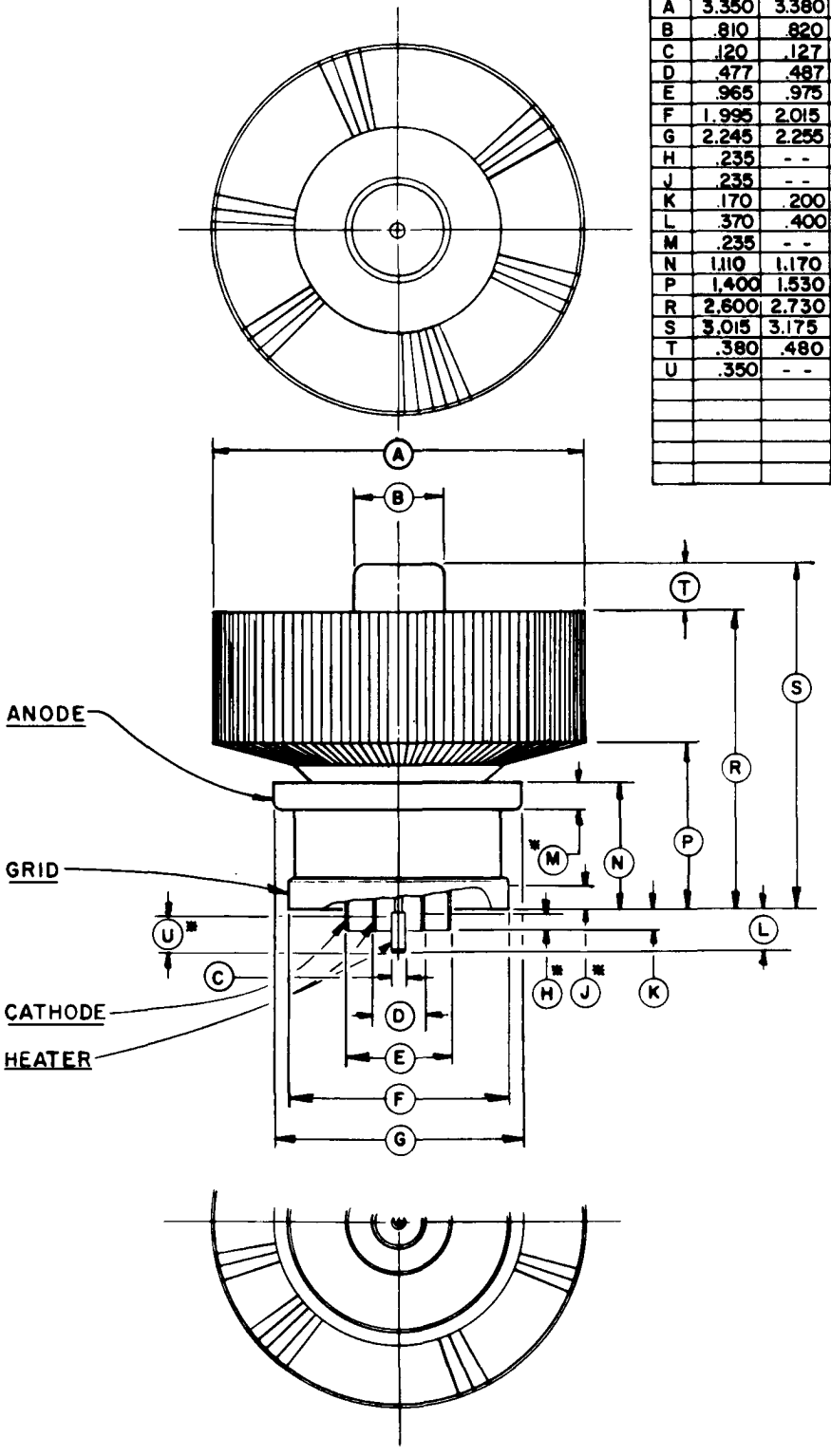

DIMENSIONAL DATA						
DIM.	INCHES			MILLIMETERS		
	MIN.	MAX.	REF.	MIN.	MAX.	REF
A	3.350	3.380	- -	85.09	85.85	- -
B	.810	.820	- -	20.57	20.83	- -
C	.120	.127	- -	3.05	3.23	- -
D	.477	.487	- -	12.12	12.37	- -
E	.965	.975	- -	24.51	24.76	- -
F	1.995	2.015	- -	50.67	51.18	- -
G	2.245	2.255	- -	57.02	57.28	- -
H	.235	- -	- -	5.97	- -	- -
J	.235	- -	- -	5.97	- -	- -
K	.170	.200	- -	4.32	5.08	- -
L	.370	.400	- -	9.40	10.16	- -
M	.235	- -	- -	5.97	- -	- -
N	1.110	1.170	- -	28.19	29.72	- -
P	1.400	1.530	- -	35.56	38.86	- -
R	2.600	2.730	- -	66.04	69.34	- -
S	3.015	3.175	- -	76.58	80.64	- -
T	.380	.480	- -	9.65	12.19	- -
U	.350	- -	- -	8.89	- -	- -

NOTES:
1. REF. DIMENSIONS ARE FOR INFO. ONLY & ARE NOT REQUIRED FOR INSPECTION PURPOSES.
2. * CONTACT SURFACE.
3. DIMENSIONS C, D, E TO BE CONCENTRIC WITH F & G WITHIN .015 DIA.
4. DIMENSIONS A & B TO BE CONCENTRIC WITH F & G WITHIN .040 DIA.