TECHNICAL DATA

8910
4CX15,000J

RADIAL BEAM
POWER TETRODE

The EIMAC 8910/4CX15,000J is a ceramic/metal, forced-air cooled power tetrode intended for use in audio or radio frequency applications. The internal structure features a mesh filament and a mechanical design which assures good strength and high rf operating efficiency.

Full ratings on the 8910/4CX15,000J apply to 110 MHz, and it is especially recommended for radio frequency linear amplifier service.

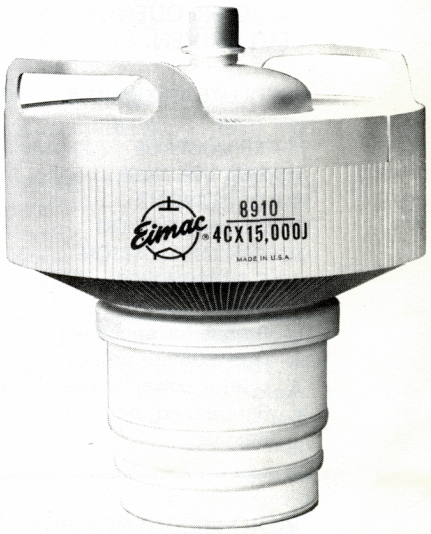

GENERAL CHARACTERISTICS[1]

ELECTRICAL

Filament; Thoriated Tungsten Mesh	
Voltage	7.5 ± 0.3 V
Current, at 7.5 volts	160 A
Amplification Factor, average	
Grid to Screen	4.5
Direct Interelectrode Capacitances (cathode grounded);[2]	
Cin	160.0 pF
Cout	26.5 pF
Cgp	1.5 pF
Direct Interelectrode Capacitances (grid and screen grounded):[2]	
Cin	67.0 pF
Cout	27.5 pF
Cpk	0.2 pF
Maximum Frequency Ratings	
CW	110 MHz

1. Characteristics and operating values are based on performance tests. These figures may change without notice as the result of additional data or product refinement. EIMAC Division of Varian should be consulted before using this information for final equipment design.

2. Capacitance values are for a cold tube as measured in a special shielded fixture in accordance with Electronic Industries Association Standard RS-191.

MECHANICAL

Maximum Overall Dimensions:	
Length	9.375 in; 238.13 mm
Diameter	7.580 in; 192.53 mm
Net Weight	12.8 lb; 5.81 kg
Operating Position	Axis vertical, base up or down
Cooling	Forced air
Operating Temperature, maximum	
Ceramic/Metal Seals and Anode Core	250°C

(Effective 10-15-71) © 1971 by Varian Printed in U.S.A.

Base	Special, concentric
Recommended Air System Socket	SK-300A
Recommended Air Chimney	SK-316

RADIO FREQUENCY LINEAR AMPLIFIER
GRID DRIVEN, Class AB

ABSOLUTE MAXIMUM RATINGS

PLATE VOLTAGE	10.0	kVdc
SCREEN VOLTAGE	2.0	kVdc
PLATE CURRENT	6.0	Adc
PLATE DISSIPATION	15.0	kW
SCREEN DISSIPATION	450	W
GRID DISSIPATION	200	W

1. Adjust for specified zero-signal plate current.
2. Approximate value.
3. Useful power is that delivered to the load.
4. Referenced against one tone of a two equal-tone signal.

TYPICAL OPERATION
Peak Envelope or Modulation Crest Conditions
Class AB1

Plate Voltage	7500	Vdc
Screen Voltage	1250	Vdc
Grid Voltage 1	-250	Vdc
Zero-Signal Plate Current	1.25	Adc
Single-Tone Plate Current	2.90	Adc
Single-Tone Screen Current 2	200	mAdc
Peak rf Grid Voltage 2	200	v
Plate Dissipation	8300	W
Single-Tone Useful Power Out 3	12	kW
Resonant Load Impedance	1450	Ω
Intermod. Distortion Products 4		
3rd Order	-41	dB
5th Order	-41	dB

RADIO FREQUENCY POWER AMPLIFIER OR OSCILLATOR
Class C Telegraphy or FM Telephony
(Key-Down Conditions)

ABSOLUTE MAXIMUM RATINGS

PLATE VOLTAGE	10.0	kVdc
SCREEN VOLTAGE	2.0	kVdc
PLATE CURRENT	5.0	Adc
PLATE DISSIPATION	15.0	kW
SCREEN DISSIPATION	450	W
GRID DISSIPATION	200	W

TYPICAL OPERATION

Plate Voltage	7,500	10,000	Vdc
Screen Voltage	750	750	Vdc
Grid Voltage	-510	-550	Vdc
Plate Current	4.65	4.55	Adc
Screen Current 1	0.59	0.54	Adc
Grid Current 1	0.30	0.27	Adc
Peak rf Grid Voltage 1	730	790	v
Calculated Driving Power	220	220	W
Plate Dissipation	8.1	9.0	kW
Plate Output Power	26.7	36.5	kW

1. Approximate value

PLATE MODULATED RADIO FREQUENCY POWER AMPLIFIER
GRID DRIVEN, Class C Telephony
(Carrier Conditions)

ABSOLUTE MAXIMUM RATINGS

PLATE VOLTAGE	8.0	kVdc
SCREEN VOLTAGE	1.5	kVdc
PLATE CURRENT	4.0	Adc
PLATE DISSIPATION	10.0	kW
SCREEN DISSIPATION	450	W
GRID DISSIPATION	200	W

TYPICAL OPERATION

Plate Voltage	6,000	8,000	Vdc
Screen Voltage	750	750	Vdc
Grid Voltage	-600	-640	Vdc
Plate Current	3.75	3.65	Adc
Screen Current 1	0.45	0.43	Adc
Grid Current 1	0.18	0.18	Adc
Peak af Screen Voltage 1			
100% modulation	740	710	v
Peak rf Grid Voltage 1	800	840	v
Calculated Driving Power	150	150	W
Plate Dissipation	5.1	5.8	kW
Plate Output Power	17.4	23.5	kW

1. Approximate value

AUDIO FREQUENCY POWER AMPLIFIER OR MODULATOR
GRID DRIVEN, Class AB_1 (Sinusoidal Wave)

ABSOLUTE MAXIMUM RATINGS (per tube)

PLATE VOLTAGE	10.0	kVdc
SCREEN VOLTAGE	2.0	kVdc
PLATE CURRENT	6.0	Adc
PLATE DISSIPATION	15.0	kW
SCREEN DISSIPATION	450	W
GRID DISSIPATION	200	W

TYPICAL OPERATION (Two Tubes)

Plate Voltage	7,500	10,000	Vdc
Screen Voltage	1,500	1,500	Vdc
Grid Voltage [1]	-350	-370	Vdc
Zero-Signal Plate Current	1.00	1.00	Adc
Maximum Signal Plate Current	8.80	8.50	Adc
Maximum Signal Screen Current [2]	0.34	0.30	Adc
Peak af Grid Voltage [2]	330	340	v
Maximum Signal Plate Dissipation	12.2	14.0	kW
Plate Output Power	41.6	57.0	kW
Load Resistance (plate to plate)	1.730	2.520	Ω

1. Adjust for specified zero-signal plate current.
2. Approximate value.

TYPICAL OPERATION values are obtained by calculations from published characteristic curves. To obtain the specified plate current at the specified bias, screen, and plate voltages, adjustment of the rf grid voltage is assumed. If this procedure is followed, there will be little variation in output power when the tube is replaced, even though there may be some variation in grid and screen currents. The grid and screen currents which occur when the desired plate current is obtained are incidental and vary from tube to tube. These current variations cause no performance degradation providing the circuit maintains the correct voltage in the presence of the current variations. If grid bias is obtained principally by means of a grid resistor, the resistor must be adjustable to produce the required bias voltage when the correct rf grid voltage is applied.

RANGE VALUES FOR EQUIPMENT DESIGN	Min.	Max.	
Heater Current, at 7.5 volts	148	168	A
Interelectrode Capacitances, cathode grounded [1]			
Cin	154.0	167.0	pF
Cout	24.0	29.0	pF
Cgp	----	2.0	pF

1. Capacitance values are for a cold tube as measured in a special shielded fixture in accordance with Electronic Industries Association Standard RS-191.

APPLICATION

MECHANICAL

MOUNTING - The 4CX15,000J must be operated with its axis vertical. The base of the tube may be down or up at the convenience of the circuit designer.

SOCKET - The EIMAC Air-System Socket Type SK-300A is designed especially for the concentric base terminals of the 4CX15,000J. The use of recommended air-flow rates through this socket provides effective forced-air cooling of the tube. Air forced into the bottom of the socket passes over the tube terminals and through the SK-316 Air Chimney, into the anode cooling fins.

COOLING - The maximum temperature rating for the external surfaces of the 4CX15,000J is 250°C. Sufficient forced-air circulation must be provided to keep the temperature of the anode at the base of the cooling fins and the temperature of the ceramic/metal seals below 250°C. Air-flow requirements to maintain seal temperatures at 225°C in 50°C ambient air are tabulated below (for operation below 30 megahertz). This data is for the tube mounted in an SK-300A socket with an SK-316 chimney.

SEA LEVEL			10,000 FEET	
Plate Dissipation * (Watts)	Air Flow (CFM)	Pressure Drop (Inches of Water)	Air Flow (CFM)	Pressure Drop (Inches of Water)
7,500	230	.7	336	1.0
12,500	490	2.7	710	4.1
15,000	645	4.6	945	7.0

* Since the power dissipated by the filament represents about 1000 watts and since grid-plus-screen dissipation can, under some conditions, represent another 600 watts, allowance has been made in preparing this tabulation for an additional 1600 watts dissipation.

The blower selected in a given application must be capable of supplying the desired air flow at a back pressure equal to the pressure drop shown above plus any drop encountered in ducts and filters.

At other altitudes and ambient temperatures the flow rate must be modified to obtain equivalent cooling. The flow rate and corresponding pressure differential must be determined individually in such cases, using rated maximum temperatures as the criteria for satisfactory cooling.

IMPACT AND VIBRATION - The 4CX15,000J is designed to operate under shock and vibration conditions which might disable a less rugged tube. Production tubes are subjected to testing to insure ability to withstand 15 G impact at 11 milliseconds duration and 2 G vibratory acceleration over the range of 5 to 55 Hz.

ELECTRICAL

FILAMENT OPERATION - The rated filament voltage for the 4CX15,000J is 7.5 volts. Filament voltage, as measured at the socket, should be maintained at this value to obtain maximum tube life. In no case should it be allowed to deviate by more than plus or minus five percent from the rated value.

ELECTRODE DISSIPATION RATINGS - The maximum dissipation ratings for the 4CX15,000J must be respected to avoid damage to the tube. An exception is the plate dissipation which may be permitted to rise above the rated maximum during brief periods, such as may occur during tuning.

GRID OPERATION - The 4CX15,000J control grid has a maximum dissipation rating of 200 watts. Precautions should be observed to avoid exceeding this rating. The grid bias and driving power should be kept near the values shown in the "Typical Operation" sections of the data sheet whenever possible. The maximum grid circuit resistance should not exceed 100,000 ohms per tube.

SCREEN OPERATION - The power dissipated by the screen of the 4CX15,000J must not exceed 450 watts.

Screen dissipation, in cases where there is no AC applied to the screen, is the simple product of the screen voltage and the screen current. If the screen voltage is modulated, the screen dissipation will depend upon loading, driving power, and carrier screen voltage.

Screen dissipation is likely to rise to excessive values when the plate voltage, bias voltage, or plate load are removed with filament and screen voltages applied. Suitable protective means must be provided to limit the screen dissipation to 450 watts in the event of circuit failure.

PLATE DISSIPATION - The plate-dissipation rating for the 4CX15,000J is 15,000 watts.

When the 4CX15,000J is operated as a plate-modulated rf power amplifier, the input power is limited by conditions not connected with the plate efficiency, which is quite high. Therefore, except during tuning there is little possibility that the 10,000 watt maximum plate dissipation rating will be exceeded.

HIGH VOLTAGE - Normal operating voltages used with this tube are deadly, and the equipment must be designed properly and operating precautions must be followed. Design all equipment so that no one can come in contact with high voltages. All equipment must include safety enclosures for high-voltage circuits and terminals, with interlock switches to open primary circuits of the power supply and to discharge high-voltage condensers whenever access doors are opened. Interlock switches must not be bypassed or "cheated" to allow operation with access doors open. Always remember that HIGH VOLTAGE CAN KILL.

X-RADIATION - High-vacuum tubes operating at voltages higher than 10 kilovolts produce progressively more dangerous X-ray radiation as the voltage is increased. This tube, operating at its rated voltages and currents, is a potential X-ray hazard. Only limited shielding is afforded by the tube envelope. Moreover, the X-ray radiation level can increase significantly with aging and gradual deterioration, due to leakage paths or emission characteristics as they are affected by the high voltage. X-ray shielding must be provided on all sides of tubes operating at these voltages to provide adequate protection throughout the tube's life. Periodic checks on the X-ray level should be made, and the tube should never be operated without adequate shielding in place when voltages above 10 kilovolts are in use. Lead glass, which attenuates X-rays, is available for viewing win-

dows. If there is any doubt as to the requirement for or the adequacy of shielding, an expert in this field should be contacted to perform an X-ray survey of the equipment.

Operation of high-voltage equipment with interlock switches "cheated" and cabinet doors open in order to be better able to locate an equipment malfunction can result in serious X-ray exposure.

RADIO FREQUENCY RADIATION - Avoid exposure to strong rf fields even at relatively low frequency. Absorption of rf energy by human tissue is dependent on frequency. Under 30 MHz, most of the energy will pass completely through the human body with little attenuation or heating effect. Public health agencies are concerned with the hazard, however, even at these frequencies, and it is worth noting that some commercial dielectric heating units actually operate at frequencies as low as the 13 and 27 MHz bands.

Many EIMAC power tubes, such as this, are specifically designed to generate or amplify radio frequency power. There may be a relatively strong rf field in the general proximity of the power tube and its associated circuitry—the more power involved, the stronger the rf field. Proper enclosure design and efficient coupling of rf energy to the load will minimize the rf field in the vicinity of the power amplifier unit itself.

INTERELECTRODE CAPACITANCE - The actual internal interelectrode capacitance of a tube is influenced by many variables in most applications, such as stray capacitance to the chassis, capacitance added by the socket used, stray capacitance between tube terminals, and wiring effects. To control the actual capacitance values within the tube, as the key component involved, the industry and the Military Services use a standard test procedure as described in Electronic Industries Association Standard RS-191. This requires the use of specially constructed test fixtures which effectively shield all external tube leads from each other and eliminates any capacitance reading to "ground".

The test is performed on a cold tube. Other factors being equal, controlling internal tube capacitance in this way normally assures good interchangeability of tubes over a period of time, even when the tube may be made by different manufacturers. The capacitance values shown in the manufacturer's technical data, or test specifications, normally are taken in accordance with Standard RS-191.

The equipment designer is therefore cautioned to make allowance for the actual capacitance values which will exist in any normal application. Measurements should be taken with the socket and mounting which represent approximate final layout if capacitance values are highly significant in the design.

SPECIAL APPLICATIONS - If it is desired to operate this tube under conditions widely different from those given here, write to the Application Engineering Dept., Power Grid Tube Division, EIMAC Division of Varian, 301 Industrial Way, San Carlos, California, 94070 for information and recommendations.

E_{c2} = 1500V

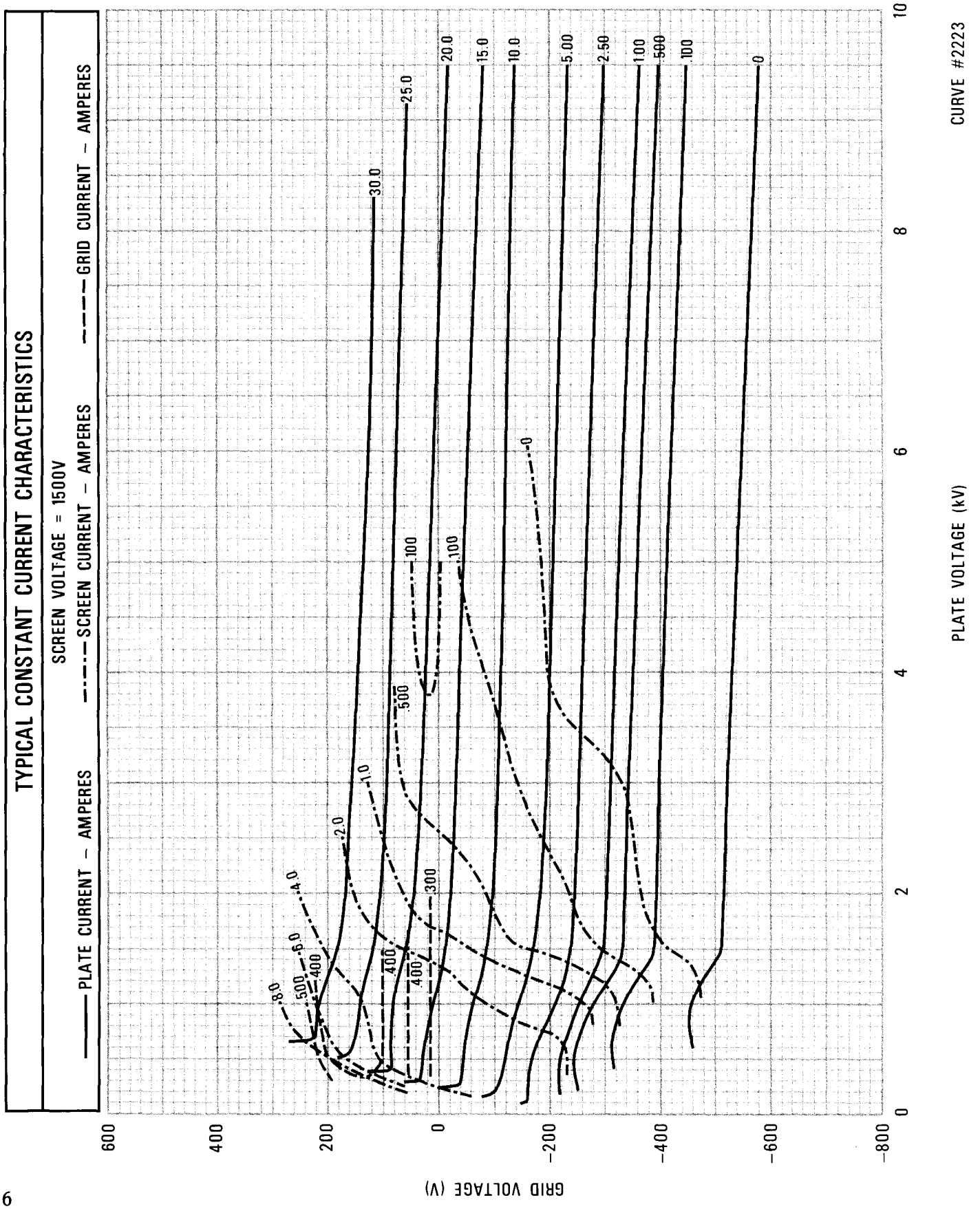
TYPICAL CONSTANT CURRENT CHARACTERISTICS
SCREEN VOLTAGE = 1500V
PLATE CURRENT – AMPERES
SCREEN CURRENT – AMPERES
GRID CURRENT – AMPERES
PLATE VOLTAGE (kV)
GRID VOLTAGE (V)
CURVE #2223
0
2
4
6
8
10
600
400
200
0
-200
-400
-600
-800
8.0
6.0
4.0
2.0
1.0
.500
.400
.300
.100
30.0
25.0
20.0
15.0
10.0
5.00
2.50
1.00
.500
.100
0

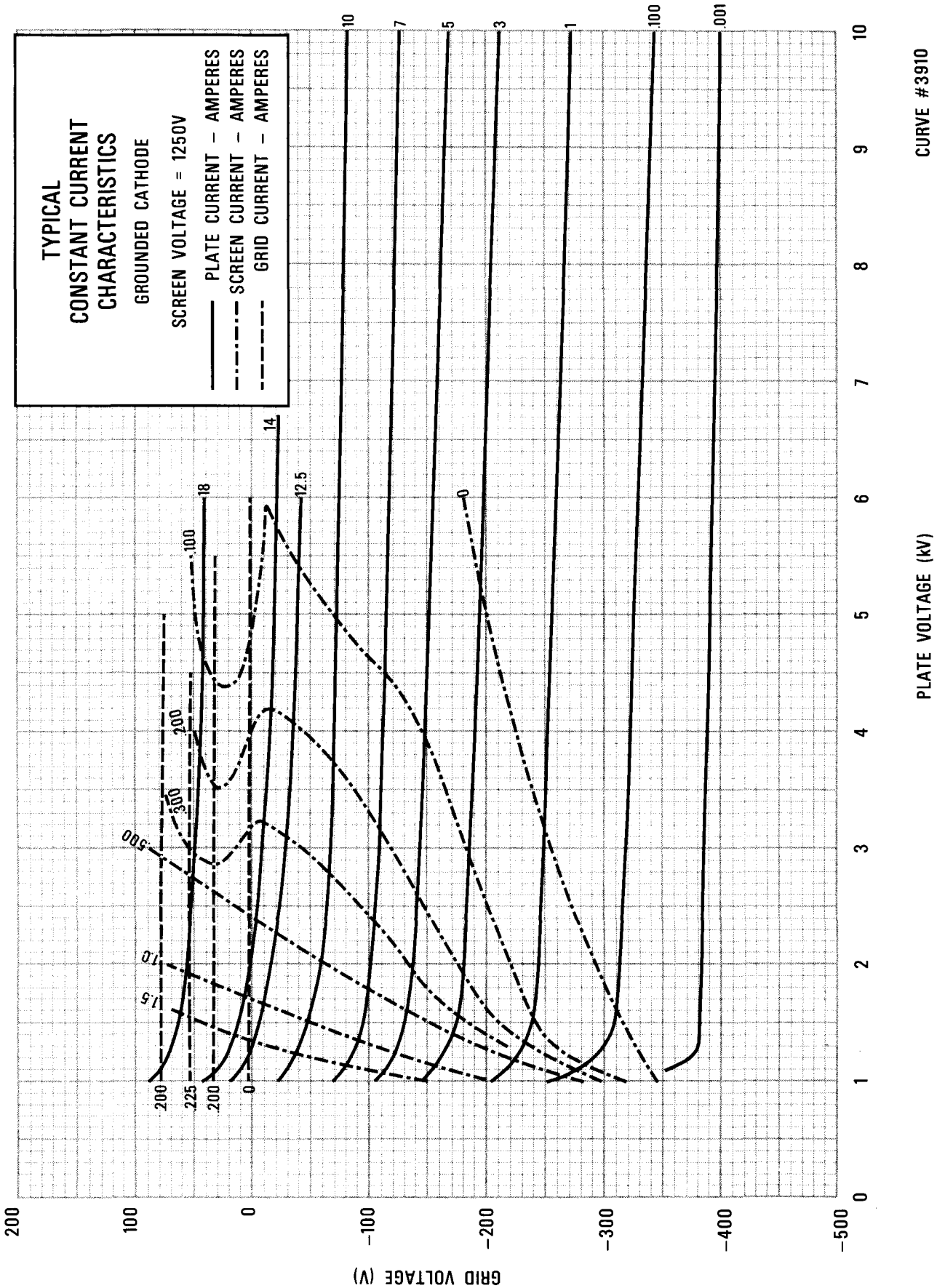
TYPICAL
CONSTANT CURRENT
CHARACTERISTICS
GROUNDED CATHODE
SCREEN VOLTAGE = 1250V
PLATE CURRENT – AMPERES
SCREEN CURRENT – AMPERES
GRID CURRENT – AMPERES
GRID VOLTAGE (V)
PLATE VOLTAGE (kV)
CURVE #3910
200
100
0
-100
-200
-300
-400
-500
0
1
2
3
4
5
6
7
8
9
10
10
7
5
3
1
.100
.001
14
12.5
18
.100
200
300
500
1.5
1.0
200
225
200
0
0

DIMENSIONAL DATA

DIM.	INCHES			MILLIMETERS		
	MIN.	MAX.	REF.	MIN.	MAX.	REF
A	7.460	7.580	- -	189.48	192.53	- -
B	0.855	0.895	- -	21.72	22.73	- -
C	0.720	0.760	- -	18.29	19.30	- -
D	1.896	1.936	- -	46.63	49.17	- -
E	3.133	3.173	- -	79.58	80.59	- -
F	3.792	3.832	- -	96.32	97.33	- -
G	3.980	4.020	- -	101.09	102.11	- -
H	0.188	- -	- -	4.78	- -	- -
J	0.188	- -	- -	4.78	- -	- -
K	0.188	- -	- -	4.78	- -	- -
L	1.764	1.826	- -	44.81	46.38	- -
M	4.659	4.783	- -	118.34	121.49	- -
N	2.412	2.788	- -	61.26	70.82	- -
P	9.000	9.375	- -	228.60	238.13	- -
R	0.986	1.050	- -	25.04	26.67	- -
S	3.560	3.684	- -	90.42	93.57	- -
T	0.375	- -	- -	9.53	- -	- -
U	4.406	4.468	- -	111.91	113.49	- -
V	3.718	3.781	- -	94.44	96.04	- -
W	0.219	- -	- -	5.56	- -	- -

NOTES:
1. REF. DIMENSIONS ARE FOR INFO. ONLY & ARE NOT REQUIRED FOR INSPECTION PURPOSES.

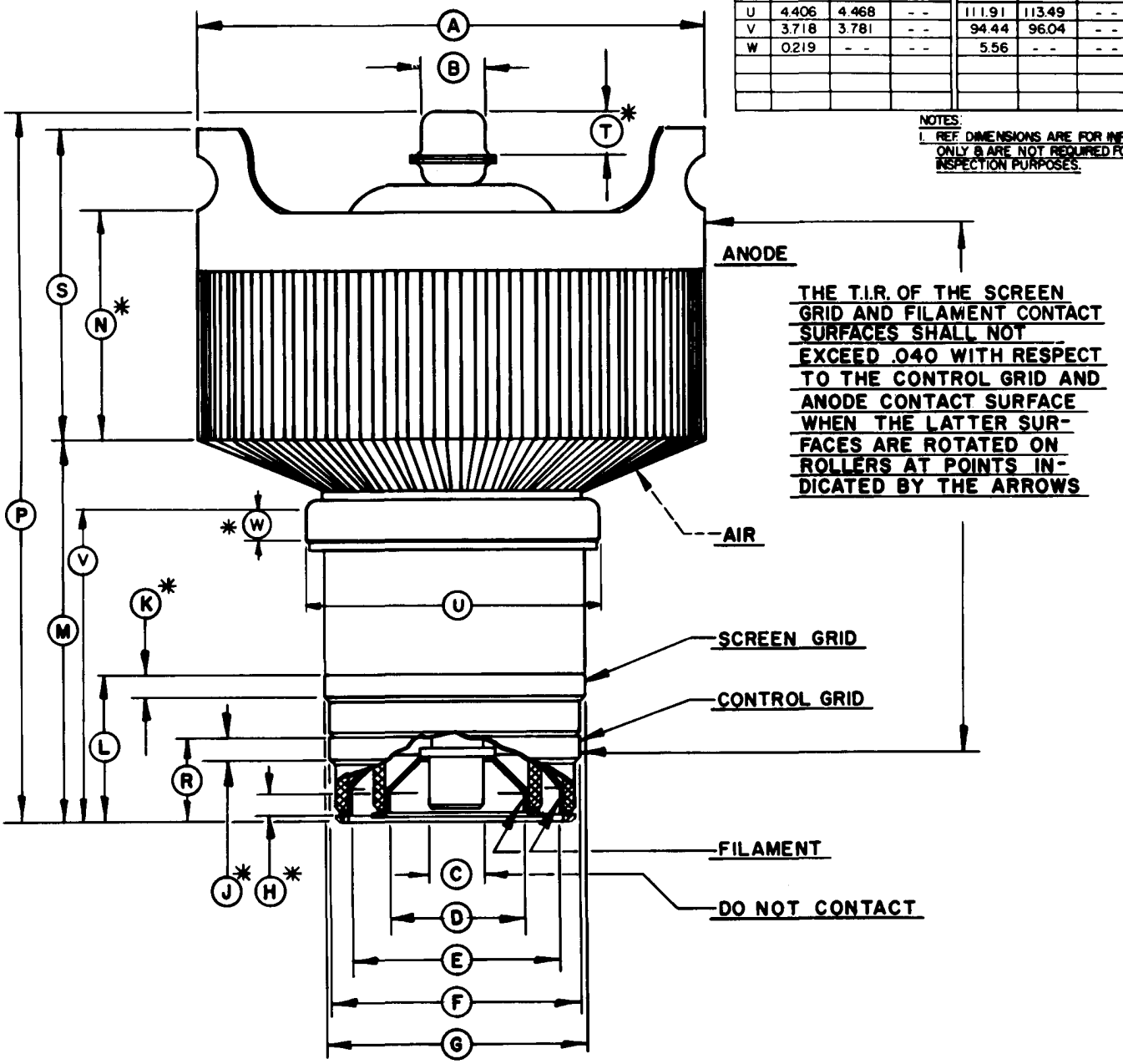

* CONTACT SURFACE