TECHNICAL DATA

8904
4CX350FJ

RADIAL BEAM
POWER TETRODE

The EIMAC 8904/4CX350FJ is a compact radial-beam tetrode with a maximum plate dissipation of 350 watts, intended for Class AB linear rf amplifier service. The tube has rugged internal construction features.

The 8904/4CX350FJ may be used as an exact replacement for the 8322/4CX350F in most applications, requiring only minor circuit adjustment and retuning. The tube has improved intermodulation distortion characteristics. It contains a 26.5 volt heater, and is recommended for new equipment designs.

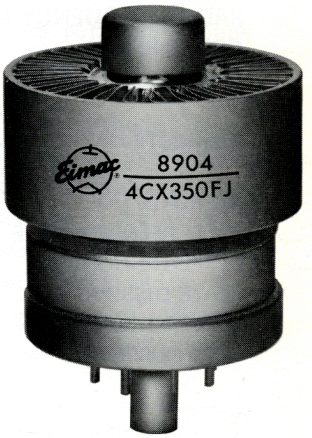

GENERAL CHARACTERISTICS[1]

ELECTRICAL

Cathode: Oxide-coated, Unipotential
- Voltage ..... 26.5 ± 1.3 V
- Current, at 26.5 volts ..... 0.65 A

Transconductance (Average):
- I_b = 150 mAdc ..... 22,000 μmhos

Amplification Factor (Average):
- Grid to Screen 17

Direct Interelectrode Capacitances (grounded cathode)[2]
- Cin ..... 22.0 pF
- Cout ..... 5.9 pF
- Cgp ..... 0.033 pF

1. Characteristics and operating values are based on performance tests. These figures may change without notice as the result of additional data or product refinement. EIMAC Division of Varian should be consulted before using this information for final equipment design.
2. Capacitance values are for a cold tube as measured in a special shielded fixture in accordance with Electronic Industries Association Standard RS-191.

MECHANICAL

Base ..... Special 9-pin, JEDEC B8-236
Recommended Air-System Socket ..... EIMAC SK-600 Series
Recommended Air Chimney ..... EIMAC SK-600 Series
Maximum Overall Dimensions:
- Length ..... 2.46 in; 62.59 mm
- Diameter ..... 1.64 in; 41.65 mm

Operating Position ..... Any
Cooling ..... Forced Air

(Effective 9-1-71) © by Varian

Printed in U.S.A.

Net Weight (Approximate)	4 oz; 113 gm
Shipping Weight (Approximate)	1.6 lb; 3.5 kg
Maximum Operating Temperature:	
Anode Core and metal/ceramic seals	250°C

RADIO FREQUENCY LINEAR AMPLIFIER
GRID DRIVEN
Class AB 1

ABSOLUTE MAXIMUM RATINGS:

DC PLATE VOLTAGE	2500	VOLTS
DC SCREEN VOLTAGE	400	VOLTS
DC PLATE CURRENT	300	MA
PLATE DISSIPATION	350	WATTS
SCREEN DISSIPATION	8	WATTS
GRID CURRENT	2	MA

1. Adjust to specified Zero-Signal Plate Current.
2. Approximate value.

TYPICAL OPERATION (Frequencies to 30 MHz)
Class AB1, Grid Driven, Peak Envelope or Modulation Crest Conditions

Plate Voltage	1400	2200	Vdc
Screen Voltage	300	400	Vdc
Grid Voltage [1]	-14	-19	Vdc
Zero-Signal Plate Current	80	100	mAdc
Single-Tone Plate Current	165	227	mAdc
Single-Tone Screen Current [2]	6	8	mAdc
Useful Output Power [3]	100	250	W
Resonant Load Impedance	3600	5000	Ω
Intermodulation Distortion [4]			
3rd Order Products	-45	-40	dB
5th Order Products	-50	-45	db

3. Power delivered to the load.
4. The IMD products are referenced against one tone of a two-equal-tone signal.

NOTE: TYPICAL OPERATION data is obtained from direct measurement. Adjustment of the rf grid voltage to obtain the specified bias, screen, and plate voltages is assumed. If this procedure is followed, there will be little variation in output power when the tube is changed, even though there may be some variation in screen current, which is incidental and which will vary from tube to tube. These current variations cause no difficulty so long as the circuit maintains the correct screen grid voltage in the presence of the variations in current.

RANGE VALUES FOR EQUIPMENT DESIGN	Min.	Max.	
Heater: Current at 26.5 volts	0.50	0.81	A
Interelectrode Capacitances[1] (grounded cathode):			
Cin	20.0	24.0	pF
Cout	5.6	6.2	pF
Cgp	---	0.038	pF

APPLICATION

MECHANICAL

MOUNTING - The 4CX350FJ may be operated in any position. An EIMAC Air-System Socket, SK-600 series, or a socket having equivalent characteristics, is required. Sockets are available with or without built-in screen bypass capacitors and may be obtained with either grounded or ungrounded cathode terminals. Air chimneys are also available for these sockets, including a unit which securely clamps the tube into place in the socket for applications where environmental stress is anticipated.

COOLING - Sufficient cooling must be provided for the anode, base seals, and body seals to maintain operating temperatures below the rated maximum value. Air requirements to maintain seal temperatures at 225°C in 50°C ambient air are shown. These values apply when the EIMAC

SK-600 or SK-610 socket is used with the SK-606 chimney, with air flowing in the base-to-anode direction.

Minimum Cooling Air Flow Requirements				
Plate Dissipation (watts)	Sea Level		10,000 Feet	
	Air Flow (cfm)	Approx. Press.drop, In. H_2O	Air Flow (cfm)	Approx. Press.drop, In. H_2O
250	5.3	0.6	7.7	0.85
300	6.5	0.9	9.5	1.25
350	7.8	1.2	12.0	1.90

Experience has shown that if reliable long-life operation is to be obtained, the cooling air flow must be maintained during standby periods when only the heater voltage is applied to the tube. The anode cooler should be inspected periodically and cleaned when necessary to remove any dirt, which may interfere with effective cooling.

The blower selected in any given application must be capable of supplying the desired air flow at a back pressure equal to the pressure drop shown, plus any drop encountered in ducts and filters, and the blower must be designed to deliver the air at the desired altitude.

It should be borne in mind that operating temperature is the sole criterion of cooling effectiveness. One method of measuring the surface temperature is by the use of a temperature-sensitive lacquer or paint. When these materials are used, thin applications must be used to avoid interference with the transfer of heat from the tube to the air stream, which would cause inaccurate indications.

SHOCK AND VIBRATION - The 4CX350FJ is recommended for applications where environmental stress is anticipated and reliable operation must be maintained under these circumstances. The tube is routinely tested at a vibration level of 10 G, over the frequency range of 28 to 750 Hertz, with full operating voltages applied, and also tested under 90 G long-duration (11 milliseconds) shock conditions, also with voltages applied. When shock or vibration stressing is expected, it is extremely important that relative motion between socket and tube be prevented or restricted by clamping the tube into place. This may be done with EIMAC Air-System Socket SK-620 or SK-630 and the EIMAC SK-636B chimney, which includes a clamping mechanism.

ELECTRICAL

HEATER - The heater voltage for the 4CX350FJ is 26.5 volts and should be maintained as closely as possible. Short-time variations of ±10% of the rated value will not damage the tube, but voltage should be maintained within ±5% of rated value to minimize variations in performance and to obtain maximum life.

CATHODE OPERATION - The cathode is internally connected to the four even-numbered base pins, and all four corresponding socket terminals should be used to make connection to the external circuits. At radio frequencies it is important to keep cathode leads short and direct and to use conductors with large areas to minimize inductive reactance in series with the cathode leads.

It is recommended that rated heater voltage be applied for a minimum of 60 seconds before other operating voltages are applied. Where the circuit design requires the cathode and heater to be operated at different potentials, the rated maximum heater-to-cathode voltage is 150 volts, regardless of polarity.

STANDBY OPERATION - When equipment is designed for very low-duty operation, where standby periods of many hours or even days at one time are anticipated, it is good engineering practice to include circuitry for reduction of the heater voltage of an oxide-cathode tube during the standby periods. This will greatly minimize the release of sublimation products within the tube. A reduction in heater voltage of 10% from the nominal value is recommended during such long standby periods, with simultaneous switching to normal voltage when the equipment is switched from STANDBY to OPERATE. A reduction in heater voltage of more than 10% is possible if operation is not attempted for several seconds after switching from the STANDBY to the OPERATE mode.

CONTROL-GRID OPERATION - The grid dissipation rating of the 4CX350FJ is zero watts. The grid current rating of 2.0 milliamperes allows the flow of positive grid current for peak-signal monitoring purposes.

SCREEN-GRID OPERATION - The maximum rated power dissipation for the screen grid of the

4CX350FJ is 8.0 watts, and the screen input power should be kept below that level. The product of the peak screen voltage and the indicated dc screen current approximates the screen input power except when the screen current indication is near zero or negative. In the usual tetrode amplifier, where no signal voltage appears between cathode and screen, the peak screen voltage is equal to the dc screen voltage.

If tuning of a linear amplifier circuit is to be done under single-tone conditions, extra care should be exercised to be sure the screen dissipation rating is not exceeded, as this is often the limiting factor during this type of operation.

Protection for the screen can be provided by an over-current relay and by interlocking the screen supply so the plate voltage must be applied before screen voltage can be applied.

The screen current may reverse under certain conditions and produce negative current indications on the screen milliameter. This is a normal characteristic of most tetrodes. The screen power supply should be designed with this characteristic in mind, so that the correct operating voltage will be maintained on the screen under all conditions. A current path from the screen to cathode must be provided by a bleeder resistor or shunt regulator connected between screen and cathode and arranged to pass approximately 15 milliamperes per connected screen. A series regulator circuit can be used only when an adequate bleeder resistor is provided.

PLATE OPERATION - The maximum rated plate-dissipation power for the 4CX350FJ is 350 watts. The maximum dissipation rating may be exceeded for brief periods during circuit adjustment without damage to the tube.

At frequencies up to approximately 30 Megahertz the top cap on the anode cooler may be used for a plate terminal. At higher frequencies a circular clamp or spring-finger collet encircling the outer surface of the anode cooler should be used.

MULTIPLE OPERATION - Tubes operating in parallel or push-pull must share the load equally. It is good engineering practice to provide for individual metering and individual adjustment of the bias or screen voltage to equalize inputs. Where overload protection is provided, it should be capable of protecting the surviving tube(s) in the event one tube should fail.

UHF OPERATION - The 4CX350FJ is useful in the UHF region. Operation at these frequencies should be conducted with heavy plate loading and the lowest driving power consistent with satisfactory performance. It is often preferable to operate at a sacrifice in efficiency to obtain increased tube life.

INTERELECTRODE CAPACITANCE - The actual internal interelectrode capacitance of a tube is influenced by many variables in most applications, such as stray capacitance to the chassis, capacitance added by the socket used, stray capacitance between tube terminals, and wiring effects. To control the actual capacitance values within the tube, as the key component involved, the industry and the Military Services use a standard test procedure as described in Electronic Industries Association Standard RS-191. This requires the use of specially constructed test fixtures which effectively shield all external tube leads from each other and eliminates any capacitance reading to "ground". The test is performed on a cold tube. Other factors being equal, controlling internal tube capacitance in this way normally assures good interchangeability of tubes over a period of time, even when the tube may be made by different manufacturers. The capacitance values shown in the manufacturer's technical data, or test specifications, normally are taken in accordance with Standard RS-191.

The equipment designer is therefore cautioned to make allowance for the actual capacitance values which will exist in any normal application. Measurements should be taken with the socket and mounting which represent approximate final layout if capacitance values are highly significant in the design.

HIGH VOLTAGE - The 4CX350FJ operates at voltages which can be deadly, and the equipment must be designed properly and operating precautions must be followed. Equipment must be designed so that no one can come in contact with high voltages. All equipment must include safety enclosures for high-voltage circuits and terminals, with interlock switches to open the primary circuits of the power supplies and to discharge high-

voltage condensers whenever access doors are opened. Interlock switches must not be bypassed or "cheated" to allow operation with access doors open. Always remember that HIGH VOLTAGE CAN KILL.

SPECIAL APPLICATIONS - If it is desired to operate this tube under conditions widely different from those given here, write to Power Grid Tube Division, EIMAC Division of Varian, 301 Industrial Way, San Carlos, CA 94070, for information and recommendations.

PIN No. 1: SCREEN GRID
PIN No. 2: CATHODE
PIN No. 3: HEATER
PIN No. 4: CATHODE
PIN No. 5: I.C. DO NOT USE FOR EXTERNAL CONNECTION
PIN No. 6: CATHODE
PIN No. 7: HEATER
PIN No. 8: CATHODE
CENTER PIN: CONTROL GRID

DIMENSIONAL DATA				
DIM.	INCHES		MILLIMETERS	
	MIN.	MAX.	MIN.	MAX.
A	2.324	2.464	59.03	62.59
B	1.610	1.640	40.89	41.66
C	1.810	1.910	45.97	48.51
D	0.750	0.810	19.05	20.57
E	0.710	0.790	18.03	20.07
F	--	1.406	--	35.71
G	0.187	--	4.75	--
H	BASE: B8-236 (JEDEC DESIGNATION)			
J	0.559	0.573	14.20	14.55
K	0.240	--	6.10	--

NOTES:
1. REF. DIMS. ARE FOR INFO. ONLY AND ARE NOT REQD. FOR INSPECTION PURPOSES.
2. (✱) CONTACT SURFACE

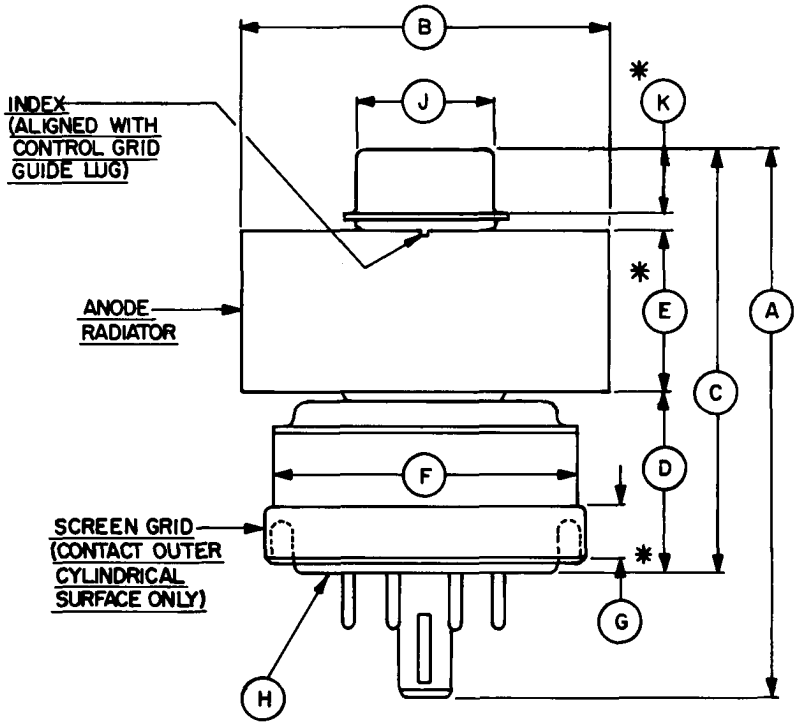

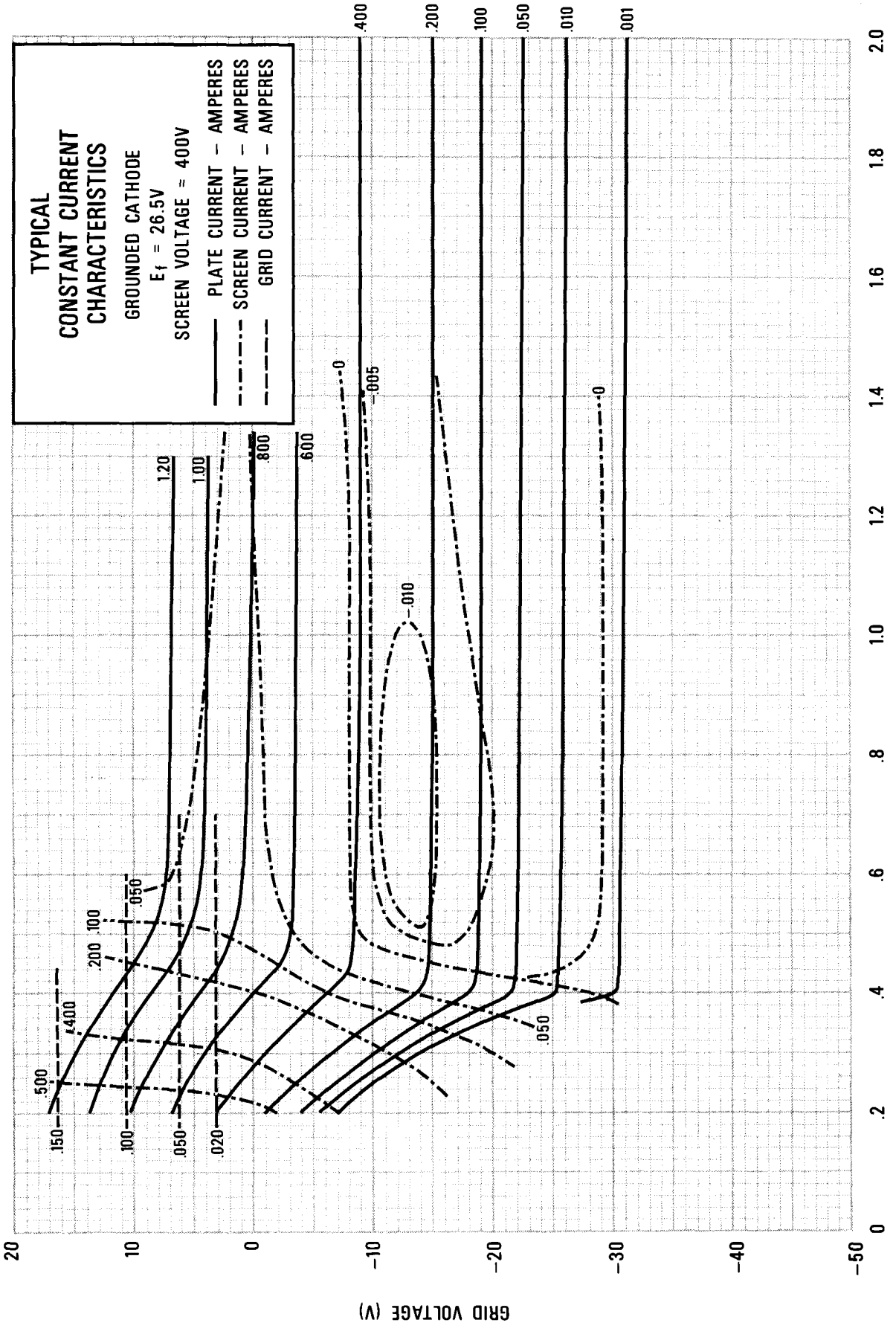
TYPICAL
CONSTANT CURRENT
CHARACTERISTICS
GROUNDED CATHODE
E_f = 26.5V
SCREEN VOLTAGE = 400V
PLATE CURRENT – AMPERES
SCREEN CURRENT – AMPERES
GRID CURRENT – AMPERES
PLATE VOLTAGE (kV)
GRID VOLTAGE (V)
CURVE #4335

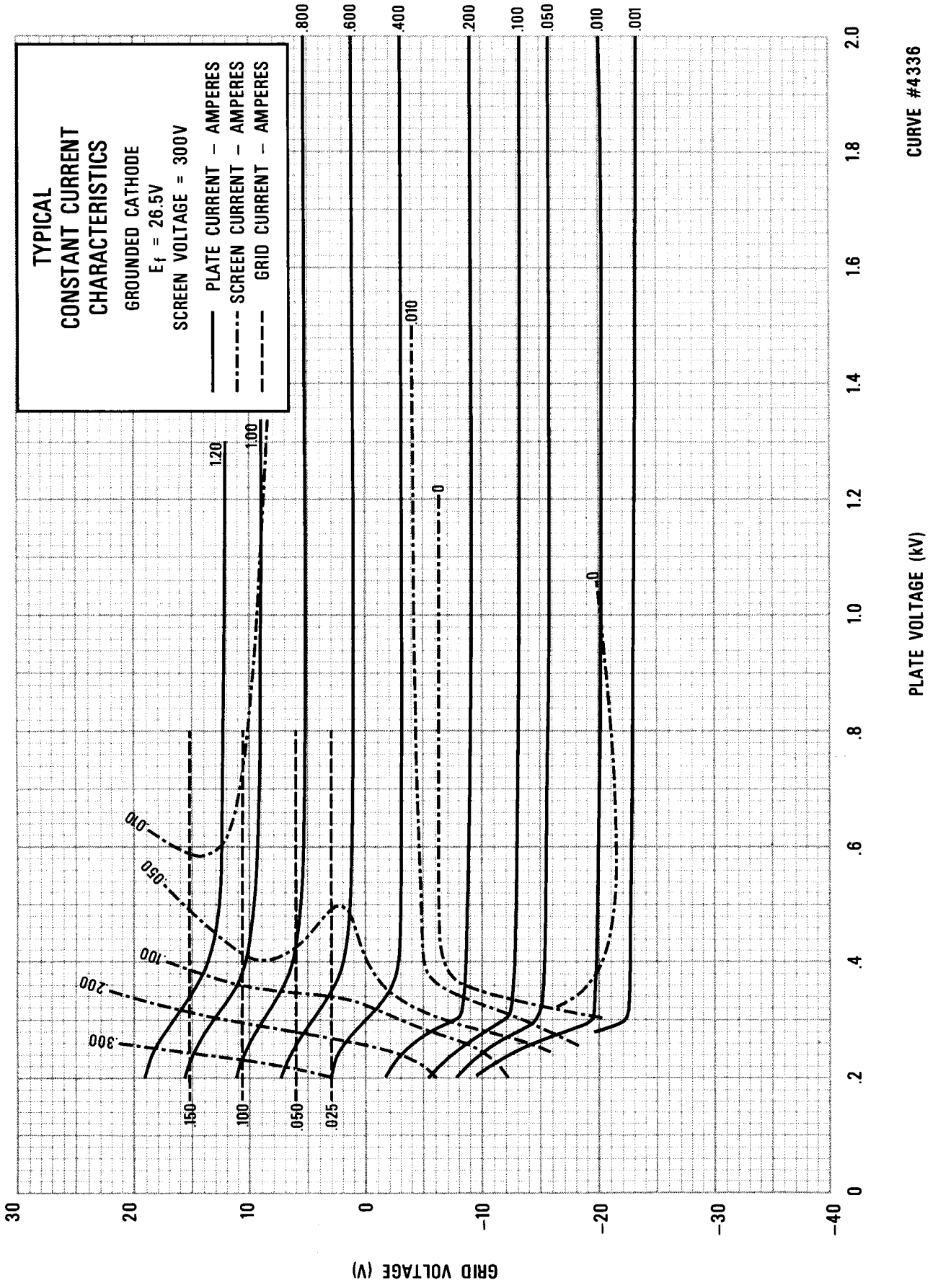
TYPICAL
CONSTANT CURRENT
CHARACTERISTICS
GROUNDED CATHODE
Ef = 26.5V
SCREEN VOLTAGE = 300V
PLATE CURRENT – AMPERES
SCREEN CURRENT – AMPERES
GRID CURRENT – AMPERES
.800
.600
.400
.200
.100
.050
.010
.001
.010
.050
.100
.200
.300
.150
.100
.050
.025
1.20
1.00
.010
0
0
0
2.0
1.8
1.6
1.4
1.2
1.0
.8
.6
.4
.2
0
30
20
10
0
-10
-20
-30
-40
GRID VOLTAGE (V)
PLATE VOLTAGE (kV)

CURVE #4336