8876

TECHNICAL DATA

RADIAL-BEAM
POWER TETRODE

The 8876 is a ceramic/metal forced-air cooled, external-anode radial-beam tetrode with a maximum plate dissipation rating of 250 watts and a maximum input-power rating of 500 watts. The 8876 is designed for very long life and reliable performance in oscillator, amplifier, or modulator service. In most applications, it may be used as a direct replacement for the 7203/4CX250B, with only minor circuit retuning required.

GENERAL CHARACTERISTICS[1]

ELECTRICAL

Cathode: Oxide Coated, Unipotential	
Heater: Voltage	6.0 ± 0.3 V
Current, at 6.0 volts	2.4 A
Cathode-Heater Potential, maximum	±150 V
Amplification Factor (Average):	
Grid to Screen	5
Direct Interelectrode Capacitances (grounded cathode)[2]	
Cin	17.0 pF
Cout	4.5 pF
Cgp	0.04 pF
Direct Interelectrode Capacitances (grounded grid and screen)[2]	
Cin	13.6 pF
Cout	4.5 pF
Cpk	0.01 pF
Frequency of Maximum Rating:	
CW	500 MHz

1. Characteristics and operating values are based upon performance tests. These figures may change without notice as the result of additional data or product refinement. EIMAC Division of Varian should be consulted before using this information for final equipment design.
2. Capacitance values are for a cold tube as measured in a special shielded fixture in accordance with Electronic Industries Association Standard RS-191.

MECHANICAL

Maximum Overall Dimensions:	
Length	2.46 in; 62.5 mm
Diameter	1.64 in; 41.7 mm
Net Weight	4 oz; 113 gm
Operating Position	Any
Maximum Operating Temperature:	
Ceramic/Metal Seals	250°C
Anode Core	250°C

(Effective 6-15-71) © 1971 Varian Printed in U.S.A.

Cooling . . . . . Forced Air
Base . . . . . Special 9-pin JEDEC-B8-236
Recommended Socket . . . . . EIMAC SK-600 Series
Recommended Chimney . . . . . EIMAC SK-600 Series

RADIO FREQUENCY LINEAR AMPLIFIER GRID DRIVEN (SSB)

Class AB_1

MAXIMUM RATINGS:

DC PLATE VOLTAGE	2000	VOLTS
DC SCREEN VOLTAGE	400	VOLTS
DC GRID VOLTAGE	-250	VOLTS
DC PLATE CURRENT	0.25	AMPERE
PLATE DISSIPATION	250	WATTS
SCREEN DISSIPATION	12	WATTS
GRID DISSIPATION	2	WATTS

TYPICAL OPERATION (Frequencies to 175 MHz)
Class AB1, Grid Driven, Peak Envelope or Modulation Crest Conditions

Plate Voltage	1000	1500	2000	Vdc
Screen Voltage	350	350	350	Vdc
Grid Voltage[1]	-55	-55	-55	Vdc
Zero-Signal Plate Current	100	100	100	mAdc
Single Tone Plate Current	250	250	250	mAdc
Two-Tone Plate Current	190	190	190	mAdc
Single-Tone Screen Current[2]	10	8	5	mAdc
Two-Tone Screen Current[2]	2	-1	-2	mAdc
Single-Tone Grid Current[2]	0	0	0	mAdc
Peak rf Grid Voltage[2]	50	50	50	v
Plate Output Power	120	215	300	W
Resonant Load Impedance	2000	3000	4000	Ω

1. Adjust to specified zero-signal dc plate current.
2. Approximate value.

RADIO FREQUENCY LINEAR AMPLIFIER GRID DRIVEN, CARRIER CONDITIONS

Class AB_1

MAXIMUM RATINGS:

DC PLATE VOLTAGE	2000	VOLTS
DC SCREEN VOLTAGE	400	VOLTS
DC GRID VOLTAGE	-250	VOLTS
DC PLATE CURRENT	0.25	AMPERE
PLATE DISSIPATION	250	WATTS
SCREEN DISSIPATION	12	WATTS
GRID DISSIPATION	2	WATTS

TYPICAL OPERATION (Frequencies to 175 MHz)
Class AB1, Grid Driven

Plate Voltage	1000	1500	2000	Vdc
Screen Voltage	350	350	350	Vdc
Grid Voltage[1]	-55	-55	-55	Vdc
Zero-Signal Plate Current	100	100	100	mAdc
Carrier Plate Current	150	150	150	mAdc
Carrier Screen Current	-3	-4	-4	mAdc
Peak rf Grid Voltage[2]	25	25	25	v
Plate Output Power	30	50	65	W

1. Adjust to specified zero-signal dc plate current.
2. Approximate value

RADIO FREQUENCY POWER AMPLIFIER OR OSCILLATOR

Class C Telegraphy or FM Telephony
(Key-Down Conditions)

MAXIMUM RATINGS:

DC PLATE VOLTAGE	2000	VOLTS
DC SCREEN VOLTAGE	300	VOLTS
DC GRID VOLTAGE	-250	VOLTS
DC PLATE CURRENT	0.25	AMPERE
PLATE DISSIPATION	250	WATTS
SCREEN DISSIPATION	12	WATTS
GRID DISSIPATION	2	WATTS

TYPICAL OPERATION (Frequencies to 175 MHz)					500 MHz
Plate Voltage	500	1000	1500	2000	2000 Vdc
Screen Voltage	250	250	250	250	300 Vdc
Grid Voltage	-90	-90	-90	-90	-90 Vdc
Plate Current	250	250	250	250	250 mAdc
Screen Current[1]	45	38	21	19	10 mAdc2
Grid Current[1]	35	31	28	26	25 mAdc2
Peak rf Grid Voltage[1]	114	114	112	112	--- v
Measured Driving Power[1]	4.0	3.5	3.2	2.9	--- W
Plate Input Power	125	250	375	500	500 W
Plate Output Power	70	190	280	390	300 W[2]
Heater Voltage	6.0	6.0	6.0	6.0	5.7 V

1. Approximate value.
2. Measured values for a typical cavity amplifier circuit.

PLATE MODULATED RADIO FREQUENCY POWER AMPLIFIER-GRID DRIVEN

Class C Telephony (Carrier Conditions)

MAXIMUM RATINGS:

DC PLATE VOLTAGE	1500	VOLTS
DC SCREEN VOLTAGE	300	VOLTS
DC GRID VOLTAGE	-250	VOLTS
DC PLATE CURRENT	0.20	AMPERE
PLATE DISSIPATION[1]	165	WATTS
SCREEN DISSIPATION[2]	12	WATTS
GRID DISSIPATION[2]	2	WATTS

TYPICAL OPERATION (Frequencies to 175 MHz)

Plate Voltage	500	1000	1500	Vdc
Screen Voltage	250	250	250	Vdc
Grid Voltage	-100	-100	-100	Vdc
Plate Current	200	200	200	mAdc
Screen Current[3]	31	22	20	mAdc
Grid Current[3]	15	14	14	mAdc
Peak rf Grid Voltage[3]	118	117	117	v
Calculated Driving Power	1.8	1.7	1.7	W
Plate Input Power	100	200	235	W

1. Corresponds to 250 watts at 100% sine-wave modulation.
2. Average, with or without modulation.
3. Approximate value.

AUDIO FREQUENCY POWER AMPLIFIER OR MODULATOR

Class AB , Grid Driven (Sinusoidal Wave)

MAXIMUM RATINGS (Per Tube)

DC PLATE VOLTAGE	2000	VOLTS
DC SCREEN VOLTAGE	400	VOLTS
DC GRID VOLTAGE	-250	VOLTS
DC PLATE CURRENT	0.25	AMPERE
PLATE DISSIPATION	250	WATTS
SCREEN DISSIPATION	12	WATTS
GRID DISSIPATION	2	WATTS

1. Approximate value

TYPICAL OPERATION (Two Tubes)

Plate Voltage	1000	1500	2000	Vdc
Screen Voltage	350	350	350	Vdc
Grid Voltage[1/3]	-55	-55	-55	Vdc
Zero-Signal Plate Current	200	200	200	mAdc
Max Signal Plate Current	500	500	500	mAdc
Max Signal Screen Current[1]	20	16	10	mAdc
Max Signal Grid Current[1]	0	0	0	mAdc
Peak af Grid Voltage[2]	50	50	50	v
Peak Driving Power	0	0	0	W
Plate Input Power	500	750	1000	W
Plate Output Power	240	430	600	W
Load Resistance (plate to plate)	3500	6200	9500	Ω

2. Per tube.
3. Adjust to give stated zero-signal plate current.

NOTE: TYPICAL OPERATION data are obtained from direct measurement or by calculation from published characteristic curves. Adjustment of the rf grid voltage to obtain the specified plate current at the specified bias, screen and plate voltages is assumed. If this procedure is followed, there will be little variation in output power when the tube is changed, even though there may be some variation in grid and screen current. The grid and screen currents which result when the desired plate current is obtained are incidental and vary from tube to tube. These current variations cause no difficulty so long as the circuit maintains the correct voltage in the presence of the variations in current. In the case of Class C Service, if grid bias is obtained principally by means of a grid resistor, the resistor must be adjustable to obtain the required bias voltage when the correct rf grid voltage is applied.

RANGE VALUES FOR EQUIPMENT DESIGN

	Min.		Max.	
Heater: Current at 6.0 volts	2.2	---	2.7	A
Cathode Warmup Time	60	---	---	sec.
Interelectrode Capacitances[1] (grounded cathode connection)				
Cin	15.0	---	18.0	pF
Cout	4.0	---	5.0	pF
Cgp	---	---	0.06	pF

1. Capacitance values are for a cold tube as measured in a special shielded fixture in accordance with Electronic Industries Association Standard RS-191.

APPLICATION

MECHANICAL

MOUNTING - The 8876 may be operated in any position. An EIMAC Air-System Socket, SK-600 series, or a socket having equivalent characteristics, is required. Sockets are available with or without built-in screen capacitors and may be obtained with either grounded or ungrounded cathode terminals.

COOLING - Sufficient forced-air cooling must be provided for the anode, base seals, and body seals to maintain operating temperatures below the rated maximum values. Air requirements to maintain anode core temperatures at 200°C with an inlet air temperature of 50°C are tabulated below. These requirements apply when a socket of the EIMAC SK-600 series and an EIMAC SK-606 chimney are used with air flow in the base to anode direction.

SEA LEVEL			10,000 FEET	
Plate Dissipation(watts)	Air Flow (CFM)	Pressure Drop(In.of water)	Air Flow (CFM)	Pressure Drop(In.of water)
200	5.0	0.52	7.3	0.76
250	6.4	0.82	9.3	1.20

The blower selected in a given application must be capable of supplying the desired airflow at a back pressure equal to the pressure drop shown above plus any drop encountered in ducts and filters. The blower must be designed to deliver the air at the desired altitude.

At 500 MHz or below, base cooling air requirements are satisfied automatically when the tube is operated in an EIMAC Air-System Socket and the recommended air flow rates are used. Experience has shown that if reliable long life operation is to be obtained, the cooling air flow must be maintained during standby periods when only the heater voltage is applied to the tube. The anode cooler should be inspected periodically and cleaned when necessary to remove any dirt which might interfere with effective cooling.

VIBRATION - This tube is designed to provide reliable service under ordinary shock and vibration conditions, such as encountered in mobile installations. However, when severe shock, or high-level and high-frequency vibration are expected, it is suggested that the EIMAC 4CX300A or 4CX250R be employed.

ELECTRICAL

HEATER - The rated heater voltage for the 8876 is 6.0 volts and the voltage must be maintained within ±5% to obtain good tube life and stable performance. Regulation to a tolerance better than ±5% normally will be beneficial as regards life expectancy.

At frequencies above approximately 300 MHz transit-time effects begin to influence the cathode temperature. The amount of driving power diverted to heating the cathode by back-bombardment will depend upon frequency, plate current, and driving power. When the tube is driven to maximum input as a class-C amplifier, the heater voltage should be reduced according to the table below;

300 MHz or lower	6.00 volts
301 to 400 MHz	5.85 volts
401 to 500 MHz	5.70 volts

CATHODE OPERATION - The oxide coated unipotential cathode must be protected against excessively high emission currents. The maximum rated dc input current is 200 mA for plate-modulated operation and 250 mA for all other types of operation except pulse.

The cathode is internally connected to the four even-numbered base pins and all four of the corresponding socket terminals should be used to make connection to the external circuits. At radio frequencies it is important to keep the cathode leads short and direct and to use conductors with large areas to minimize the inductive reactances in series with the cathode leads.

It is recommended that rated heater voltage be applied for a minimum of 60 seconds before other operating voltages are applied. If faster warmup is required, an over-voltage of 8.0 volts may be applied to the heater and held for 30 seconds, at which time the voltage must be reduced to the rated value. Full operating cathode temperature is reached in 30 seconds with this technique. From a cold start, it is imperative that the over-voltage be held not over 30 seconds, and if the tube has not completely cooled since previous use, a shorter period of over-voltage must be used.

Where the circuit design requires the cathode and heater to be operated at different potentials, the rated maximum heater-to-cathode voltage is 150 volts regardless of polarity.

GRID OPERATION - The maximum rated dc grid bias voltage is -250 volts and the maximum grid dissipation rating is 2.0 watts. In ordinary audio and radio-frequency amplifiers the grid dissipation usually will not approach the maximum rating. At operating frequencies above the 100 MHz region, driving power requirements for amplifiers increase noticeably. At 500 MHz as much as 20 watts of driving power may have to be supplied. However, most of the driving power is absorbed in circuit losses other than grid dissipation, so that grid dissipation is increased only slightly. Satisfactory 500 MHz operation of the tube in a stable amplifier is indicated by grid-current values below approximately 15 mA.

The grid voltage required by different tubes may vary between limits approximately 20% above and below the center value, and means should be provided in the equipment to accommodate such variation. It is especially important that variations between individual tubes be compensated when tubes are operated in parallel or push-pull circuits, to assure equal load sharing.

The maximum permissible grid-circuit resistance per tube is 100,000 ohms.

SCREEN OPERATION - The maximum rated power dissipation for the screen is 12 watts, and the screen input power should be kept below that level. The product of the peak screen voltage and the indicated dc screen current approximates the screen input power except when the screen current indication is near zero or negative.

In the usual tetrode amplifier, where no signal voltage appears between cathode and screen, the peak screen voltage is equal to the dc screen voltage.

When signal voltages appear between screen and cathode, as in the case of screen-modulated amplifiers or cathode-driven tetrode amplifiers, the peak screen-to-cathode voltage is the sum of the dc screen voltage and the peak ac or rf signal voltage applied to screen or cathode.

Protection for the screen should be provided by an over-current relay and by interlocking the screen supply so that plate voltage must be applied before screen voltage can be applied.

The screen current may reverse under certain conditions and produce negative current indications on the screen milliammeter. This is a normal characteristic of most tetrodes. The screen power supply should be designed with this characteristic in mind so that the correct operating voltage will be maintained on the screen under all conditions. A current path from screen to cathode must be provided by a bleeder resistor, gaseous voltage regulator tubes, or an electron tube *shunt* regulator connected between screen and cathode and arranged to pass approximately 15 milliamperes per connected screen. An electron tube *series* regulator can be used only when an adequate bleeder resistor is provided.

Self-modulation of the screen in plate-modulated tetrode amplifiers using these tubes may not be satisfactory because of the screen-voltage screen-current characteristics. Screen modulation from a tertiary winding on the modulation transformer or by means of a small separate modulator tube will usually be more satisfactory. Screen-voltage modulation factors between 0.75 and 1.0 will result 100% modulation for plate-modulated rf amplifiers using the 8876.

PLATE OPERATION - The maximum rated plate dissipation power is 250 watts. In plate-modulated applications the carrier plate dissipation power must be limited to 165 watts to avoid exceeding the plate dissipation rating with 100% sine wave modulation. The maximum dissipation rating may be exceeded for brief periods during circuit adjustment without damage to the tube.

MULTIPLE OPERATION - Tubes operating in parallel or push-pull must share the load equally. It is good engineering practice to provide individual metering and individual adjustment of bias or screen voltage to equalize the inputs.

Where overload protection is provided, it should be capable of protecting the surviving tube (s) in the event that one tube fails.

VHF OPERATION - The 8876 is suitable for use in the VHF region. Such operation should be conducted with heavy plate loading, minimum bias, and the lowest driving power consistent with satisfactory performance. It is often preferable to operate at a sacrifice in efficiency to obtain increased tube life.

HIGH VOLTAGE - Normal operating voltages used with the 8876 are deadly, and the equipment must be designed properly and operating precautions must be followed. Design all equipment so that no one can come in contact with high voltages. All equipment must include safety enclosures for high-voltage circuits and terminals, with interlock switches to open primary circuits of the power supply and to discharge high-voltage condensers whenever access doors are opened. Interlock switches must not be bypassed or "cheated" to allow operation with access doors open. Always remember that HIGH VOLTAGE CAN KILL.

INTERELECTRODE CAPACITANCE - The actual internal interelectrode capacitance of a tube is influenced by many variables in most applications, such as stray capacitance to the chassis, capacitance added by the socket used, stray capacitance between tube terminals, and wiring effects. To control the actual capacitance values within the tube, as the key component involved, the industry and the Military Services use a standard test procedure as described in Electronic Industries Association Standard RS-191. This requires the use of specially constructed test fixtures which effectively shield all external tube leads from each other and eliminates any capacitance reading to "ground". The test is performed on a cold tube. Other factors being equal, controlling internal tube capacitance in this way normally assures good interchangeability of tubes over a period of time, even when the tube may be made by different manufacturers. The capacitance values shown in the manufacturer's technical data, or test specifications, normally are taken in accordance with Standard RS-191.

The equipment designer is therefore cautioned to make allowance for the actual capacitance values which will exist in any normal application. Measurements should be taken with the socket and mounting which represent approximate final layout if capacitance values are highly significant in the design.

SPECIAL APPLICATIONS - If it is desired to operate these tubes under conditions widely different from those given here, write to Power Grid Tube Division, EIMAC Division of Varian, San Carlos, Calif. 94070 for information and recommendations.

PIN DESIGNATION

PIN NO. 1	SCREEN GRID
PIN NO. 2	CATHODE
PIN NO. 3	HEATER
PIN NO. 4	CATHODE
PIN NO. 5	I.C. DO NOT USE FOR EXTERNAL CONNECTION.
PIN NO. 6	CATHODE
PIN NO. 7	HEATER
PIN NO. 8	CATHODE
CENTER PIN-CONTROL GRID	

DIMENSIONAL DATA				
DIM.	INCHES		MILLIMETERS	
	MIN.	MAX.	MIN.	MAX.
A	2.342	2.464	59.03	62.59
B	1.610	1.640	40.89	41.66
C	1.810	1.910	45.97	48.51
D	0.750	0.810	19.05	20.57
E	0.710	0.790	18.03	20.07
F	--	1.406	--	35.71
G	0.187	--	4.75	--
H	BASE: B8-236 (JEDEC DESIGNATION)			
J	0.559	0.573	14.20	14.55
K	0.240	--	6.10	--

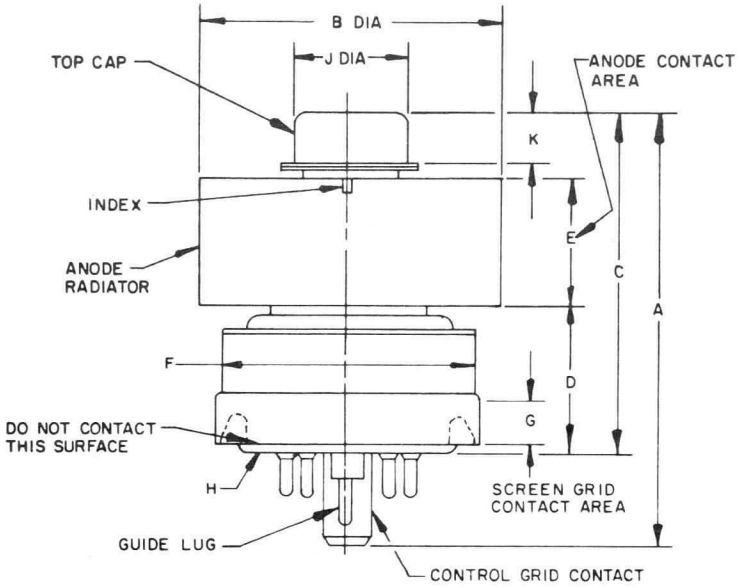

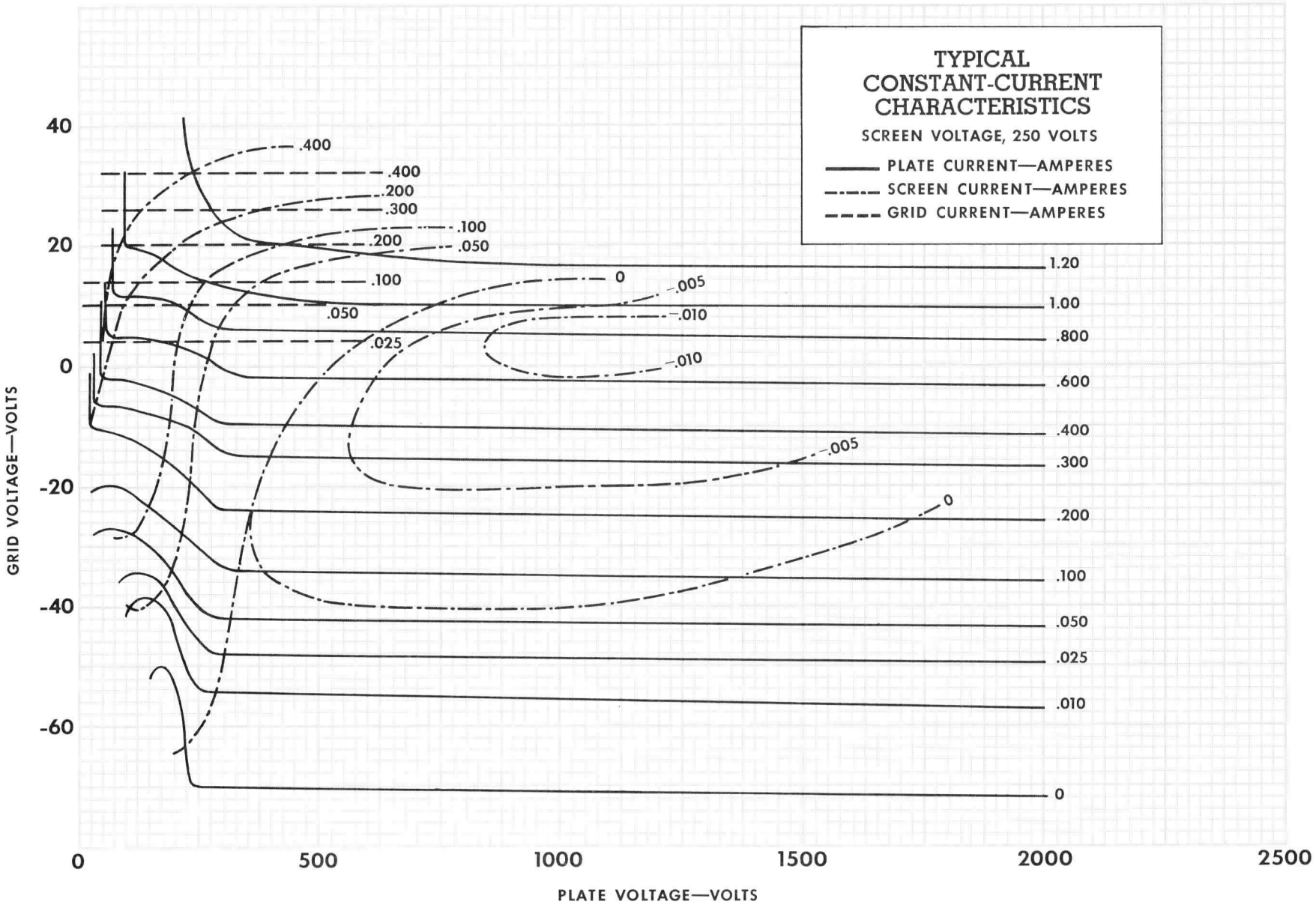
TYPICAL
CONSTANT-CURRENT
CHARACTERISTICS
SCREEN VOLTAGE, 250 VOLTS
PLATE CURRENT—AMPERES
SCREEN CURRENT—AMPERES
GRID CURRENT—AMPERES
GRID VOLTAGE—VOLTS
PLATE VOLTAGE—VOLTS
40
20
0
-20
-40
-60
0
500
1000
1500
2000
2500
1.20
1.00
.800
.600
.400
.300
.200
.100
.050
.025
.010
0
.400
.400
.200
.300
.100
.200
.050
.100
.050
.025
0
-.005
-.010
-.010
-.005
0

8876

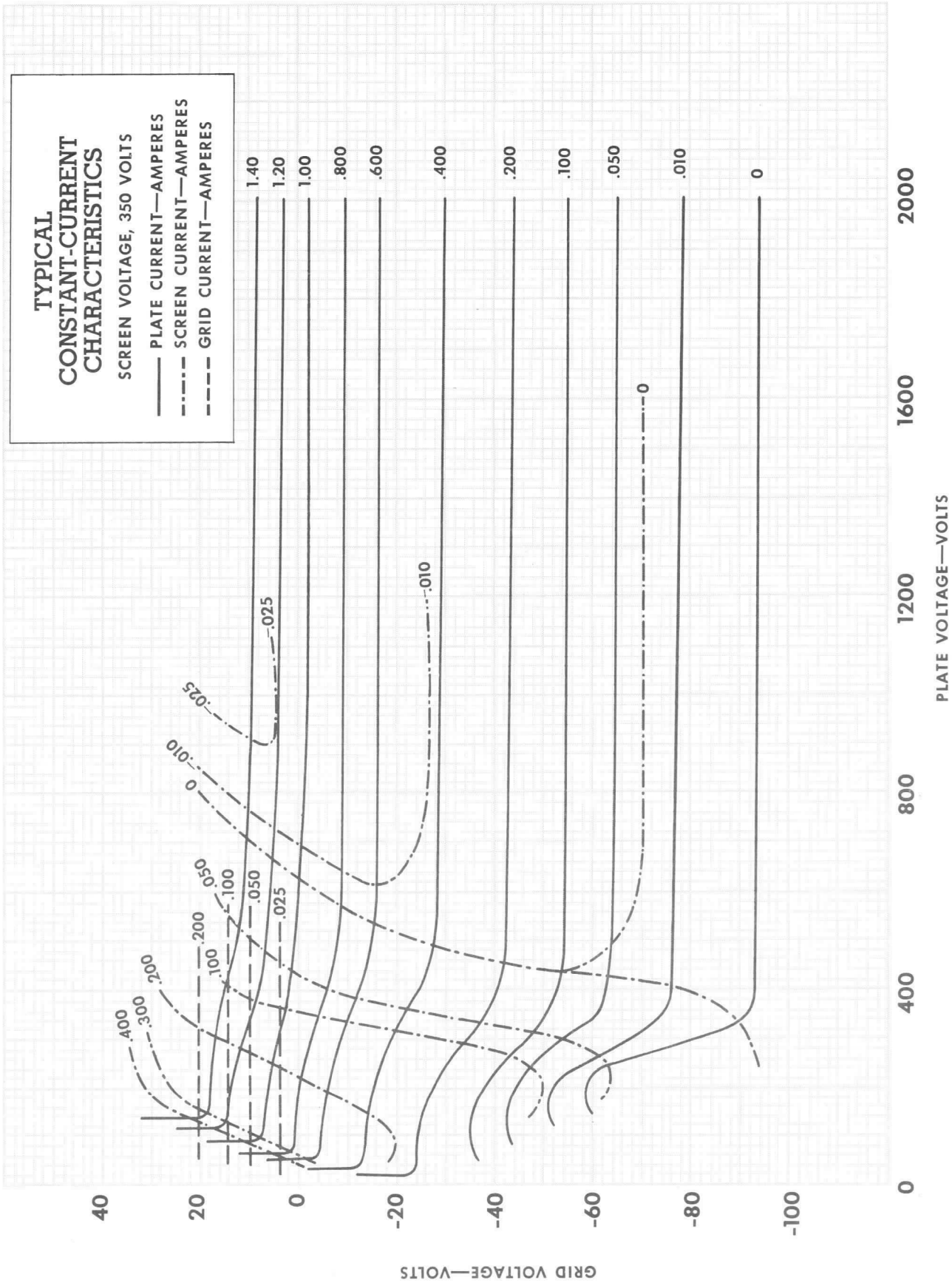
TYPICAL
CONSTANT-CURRENT
CHARACTERISTICS
SCREEN VOLTAGE, 350 VOLTS
PLATE CURRENT—AMPERES
SCREEN CURRENT—AMPERES
GRID CURRENT—AMPERES
1.40
1.20
1.00
.800
.600
.400
.200
.100
.050
.010
0
.025
.010
0
.025
.010
0
.050
.100
.050
.025
.200
.100
.200
.300
.400
40
20
0
-20
-40
-60
-80
-100
GRID VOLTAGE—VOLTS
0
400
800
1200
1600
2000
PLATE VOLTAGE—VOLTS