TECHNICAL DATA

8873 8874 8875 HIGH-MU TRIODES

8873

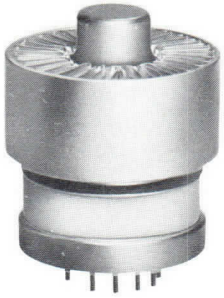

8874

8875

The EIMAC 8873, 8874, and 8875 are compact external-anode ceramic/metal triodes intended for use in Class AB or C amplifiers in radio-frequency applications. The three types differ only in method of cooling and anode dissipation: the anode of the 8873 is designed for conduction cooling and is rated for 200 watts; the 8875 anode has a transverse cooler for forced-air cooling and is rated for 300 watts; and the 8874 requires axial-flow forced-air cooling and is rated for 400 watts. Grounded-grid operation is attractive since a power gain as high as twenty times can be obtained with these types in a cathode-driven circuit.

GENERAL CHARACTERISTICS[1]

ELECTRICAL

Cathode: Oxide Coated, Unipotential	
Heater Voltage	6.3 ± 0.3 V
Heater Current, at 6.3 volts	3.0 A
Cathode-Heater Potential (maximum)	±150 V
Tranconductance, average	
Ib = 250 mAdc	29,000 μmhos
Direct Interelectrode Capacitances, (cathode grounded, in shielded fixture)[2]	
Cin	20.5 pF
Cout	0.03 pF
Cgp	6.0 pF
Direct Interelectrode Capacitances, (grid grounded, in shielded fixture)[2]	
Cin	20.5 pF
Cout	6.0 pF
Cpk	0.03 pF
Ck-htr	6.0 pF
Frequency of Maximum Rating:	
CW	500 MHz

1. Characteristics and operating values are based upon peformance tests. These figures may change without notice as the result of additional data or product refinement. Varian, EIMAC Division should be consulted before using this information for final equipment design.
2. Capacitance values are for a cold tube as measured in a special shielded fixture in accordance with Electronic Industries Association Standard RS-191.

3981(Revised 8-1-79) © 1970, 1971, 1973, 1977, 1979 by Varian Printed in U.S.A.

MECHANICAL

Maximum Overall Dimensions:

	TYPE 8873	TYPE 8874	TYPE 8875
Length	2.14 in. 54.41 mm	2.14 in. 54.41 mm	2.18 in. 55.50 mm
Diameter	1.64 in. 41.66 mm	1.64 in. 41.66 mm	2.52 in. 64.01 mm
Net Weight	8.50 oz. 240.9 gm	4.30 oz. 121.9 gm	8.60 oz. 243.8 gm
Operating Position	Any	Any	Any

Cooling: (Type 8873)

Conduction cooled. Recommended Beryllium Oxide thermal link ..... EIMAC SK-1920

(Type 8874)

Air flow at 50°C and sea level ..... 8.6 ft^3/Min.

Pressure Drop, across tube anode cooler at 8.6 ft^3/Min ..... 0.37 in H_2O

(Type 8875)

Air flow at 25°C and sea level, and
Pressure Drop across tube anode cooler } See Application Section, Cooling 8875

Operating Temperature, Maximum, all three types,

Ceramic/Metal seals and Anode Core ..... 250°C

Base: (all types) ..... Large Wafer Elevenar 11-Pin with Ring (JEDEC No. E11-81)

Recommended Socket ..... E.F. Johnson #124-311-100*

Available grid Collet, for base grid ring contact ..... EIMAC Part No. 882931

*NOTE: The E.F. Johnson socket is available from EIMAC as Part No. 154353.

RANGE VALUES FOR EQUIPMENT DESIGN

	Min.	Max.
Heater Current, at 6.3 volts	2.8	3.4 A
Cathode Warmup Time	60	--- sec.
Plate Current (Ef = 6.3 V, Eb = 1000 Vdc, Ec = 0 Vdc)	35	80 mAdc
Grid Cut-off (Ef = 6.3 V, Eb = 2000 Vdc, Ib = 1.0 mAdc)	---	-16 Vdc
Interelectrode Capacitances (cathode grounded, in shielded fixture)[1]		
Cin	18.0	23.0 pF
Cout	---	0.04 pF
Cgp	5.0	7.0 pF
Interelectrode Capacitances (grid grounded, in shielded fixture)[1]		
Cin	18.0	23.0 pF
Cout	5.0	7.0 pF
Cpk	---	0.04 pF

1. Capacitance values are for a cold tube as measured in a special shielded fixture in accordance with Electronic Industries Association Standard RS-191.

RADIO FREQUENCY LINEAR AMPLIFIER CATHODE DRIVEN

Class AB_2

MAXIMUM RATINGS:

DC PLATE VOLTAGE	2200	VOLTS
DC PLATE CURRENT	0.350	AMPERE
PLATE DISSIPATION (nominal values)		
TYPE 8873 (with heat sink)	200	WATTS
TYPE 8874	400	WATTS
TYPE 8875	300	WATTS
GRID DISSIPATION	5	WATTS

TYPICAL OPERATION
Class AB_2 (Cathode driven) Peak Envelope Modulation
Crest or Key-Down Conditions[1]

Frequency	30	150	432	MHz
Plate Voltage	2000	2000	2000	Vdc
Cathode Voltage	8.2	9.8	8.2	Vdc
Zero-Signal Plate Current	22	10	22	mAdc
Single-Tone IVS Plate Current[2]	500	400	500	mAdc
Two-Tone Plate Current[3]	312	245	300	mAdc
Single-Tone Grid Current[4]	30	23	98	mAdc
Two-Tone Grid Current[4]	12	10	39	mAdc
Peak rf Grid/Cathode Voltage[4]	67	50	67	v
Peak Driving Power[4]	26	17.5	27	w
Peak Power Input	1000	800	1000	W
Useful Output Power[4]	587	526	505	W
Resonant Load Impedance	2140	--	--	Ω
Intermodulation Distortion[5]				
3rd Order	-35	--	--	dB
5th Order	-36	--	--	dB

1. Short-term duty should not exceed 50%. During brief test periods, "on" time must be kept as short as possible, with sufficient "off" time to allow for tube cooling.
2. Key down condition. With 50% duty, current will be half the value shown.
3. Two equal-tone modulation. During brief test periods, allow sufficient "off" time for tube cooling. Values will be lower with voice modulation for the same PEP level.
4. Approximate values.
5. The intermodulation distortion products are referenced against one tone of a two equal-tone signal.

RADIO FREQUENCY POWER AMPLIFIER OR OSCILLATOR

Class C Telegraphy or FM
(Key-Down Conditions)

MAXIMUM RATINGS:

DC PLATE VOLTAGE	2200	VOLTS
DC GRID VOLTAGE	-100	VOLTS
DC PLATE CURRENT	0.350	AMPERE
PLATE DISSIPATION (nominal values)		
TYPE 8873 (with heat sink)	200	WATTS
TYPE 8874	400	WATTS
TYPE 8875	300	WATTS
GRID DISSIPATION	5	WATTS

TYPICAL OPERATION (Frequencies to 110 MHz)

Plate Voltage	2000	Vdc
Grid Voltage[1]	-10	Vdc
Plate Current	250	mAdc
Grid Current[1]	40	mAdc
Measured Driving Power	9	WATTS
Plate Input Power	500	WATTS
Plate Dissipation	195	WATTS
Useful Output Power	305	WATTS

1. Approximate value.

PULSE MODULATOR OR REGULATOR

MAXIMUM RATINGS:

DC PLATE VOLTAGE	3500	VOLTS
PEAK ANODE CURRENT	6	AMPERE
GRID DISSIPATION	5	WATTS

PLATE DISSIPATION (nominal values):

TYPE 8873 (with heat sink)	200	WATTS
TYPE 8874	400	WATTS
TYPE 8875	300	WATTS

APPLICATION

MOUNTING & SOCKETING - The 8873, 8874, and 8875 may be mounted in any position. Sockets such as E.F. Johnson #124-311-100, or equivalent, may be used as long as there are no unusual circumstances which would allow the ceramic/metal anode and base seal temperatures to exceed 250°C. The internal construction of these tubes is such that heat transfer to the tube base is minimized, but in operation there is some heat flow from the tube base to the socket. Mounting should be such that free movement of air past the base by convection is possible, or, if forced-air cooling is being provided for the anode, some of this air may be bled off to provide for some circulation past the tube base.

The 8873 mounting is normally controlled by its heat sink configuration and location. Where possible, the socket can be mounted on a bracket which in turn is mounted to the heat sink so that the one sink will act for removal of heat from the tube anode and also the tube base. The EIMAC SK-1920 beryllium oxide (BeO) thermal link is available for use between the 8873 anode and the heat sink. BeO is a ceramic material which exhibits high thermal conductance, similar to aluminum, and high electrical resistance and low loss typical of ceramics. Properly installed, it provides a low thermal resistance path allowing the anode heat to be transferred to the heat sink, while providing electrical isolation between the anode and the sink.

The 8874 requires forced-air cooling for its anode, which can often be accomplished most easily by means of a pressurized anode-compartment chassis, with air passing through the anode cooler and then exhausting. In such an installation, some air can be bled past the socket mount to provide base cooling if this is required.

The 8875 has a large transverse cooler on its anode, requiring forced-air cooling directed crossways.

HEATER/CATHODE OPERATION - The rated heater voltage for the 8873, 8874, and 8875 is 6.3 volts, as measured at the base of the tube, and variations should be restricted to plus or minus 0.3 volt for long life and consistent performance. At frequencies above approximately 300 MHz it may be necessary to reduce heater voltage to compensate for rf transit-time heating of the cathode after dynamic operation of the tube has started. The back heating is a function of frequency, grid current, grid-bias, anode current, duty cycle, and circuit design and adjustment. The following heater operating voltages are recommended:

Frequency (MHz)	Heater Voltage
300 or lower	6.3
301 to 400	6.0
401 to 500	5.7

The potential between the heater and the cathode should be limited to plus or minus 150 Vdc.

CATHODE WARMUP TIME - In normal service it is recommended that the heater voltage be applied for a minimum of 60 seconds before anode voltage and drive boltage are applied, to allow proper conditioning of cathode surface.

If it is desired to apply anode voltage simultaneously with heater voltage, enough bias voltage must also be applied so that no conduction can take place until drive voltage is applied after the full 60 seconds of warmup time.

ANODE CURRENT RATING AND TUNEUP PROCEDURE - The 8873, 8874, and 8875 are rated for 350 mAdc of continuous anode current. In intermittent voice (A3J emission) and interrupted carrier keying (A1 emission) service, which would be normal single-sideband-suppressed-carrier or keyed CW operation, and where short-term duty does not exceed 50%, the dc anode current (per tube) may be 500 mA during the "on" time. With 50% duty, the average current (per tube) would be 250 mA. During very short test periods, the tubes may be operated at full 500 mA value but care must be taken to keep the "on" time as short as possible, with sufficient "off" time to allow for tube cooling.

Initial tuneup should preferable be done with reduced anode voltage and drive, and if done at the correct values, little or no retuning will be necessary when switching to full operating level. For the 2000 volt Intermittent Voice Service (IVS) condition, tuneup is recommended at 1500 volts and reduced grid drive. When anode voltage and drive are then raised, the full one kilowatt PEP IVS condition will be achieved with little or no retuning required.

COOLING - 8873 - This tube is designed for use in a conduction-cooled system by using a beryllium oxide (BeO) thermal link between the anode and the heat sink. The heat sink in turn can be cooled by natural (free) convection, forced-air convection, liquid cooling, or a combination of these methods. The design choice is determined by the tube application, but in all cases the cooling system must maintain the anode and the ceramic-metal seal temperatures below 250°C.

Intimacy of contact and pressure are two factors which will effect transfer of heat from the tube anode through the BeO thermal link to the heat

sink. A good thermally conductive compound should be used in the interface (between anode and BeO, and between BeO and heat sink) to reduce the thermal resistance of the joint. Examples of commercially available thermal joint compound are:

WAKEFIELD 120 - Wakefield Engineering Co., Wakefield, Mass. 01880
DOW CORNING 340 - Dow Corning Corp., Midland, Michigan 48640
ASTRODYNE THERMAL BOND 312 - Astrodyne Inc., Burlington, Mass 01803
G.E. INSULGREASE G641 - G.E. Company, Cleveland, Ohio 44117

The method of fastening the tube to the heat sink should provide reasonable compression to reduce interface thermal resistance. A device such as the DE-STA-CO toggle clamp, modified by replacing the rubber nose with a ½-inch ceramic insulator, can provide a simple means of holding the tube securely and providing adequate compression.

The EIMAC SK-1920 BeO thermal link is recommended for use between the tube anode and the heat sink, as it is the correct size and thickness to match the physical and electrical characteristics of the 8873 tube.

IMPORTANT - BEFORE HANDLING OR ATTEMPTING TO USE ANY BERYLLIUM OXIDE THERMAL LINK CAREFULLY READ THE MATERIAL ON PAGE 6 REGARDING THIS MATERIAL.

A heat sink capable of handling 200 watts of continuous dissipation from the 8873 can be made with a section of finned aluminum alloy extrusion, such as Wakefield A-2494, or equivalent, cut to approximately 8 inches by 4 inches, backed with a ⅛-inch copper plate the same size. Thermal joint compound is used between the copper plate and the flat aluminum surface, with the two secured together at enough points to assure good continuous contact. The backed extrusion is mounted so as to allow for free air convection around the fins. The tube is then mounted, with the EIMAC SK-1920 thermal link, in the approximate center of the copper surface, with thermal joint compound again used between the tube anode and the BeO link, and between the BeO link and the copper. A device such as the modified DE-STA-CO toggle clamp is used to hold the tube securely in place.

Socketing is accomplished with one of the units mentioned earlier, mounted so as to allow for free air convection around the base of the tube and the socket, and on a bracket which returns to the same heat sink if possible. The designer is cautioned to allow for some lateral movement in the socket mount, and to make sure the anode is flat against the BeO thermal link so that good conduction contact exists before the socket mounts are tightened down. If the tube anode, the thermal link, and the heat sink are not making good flat contact, heat transfer will be seriously affected.

If unusually high ambient temperatures are expected, or more than 200 watts capability is required, a small fan can be used to move air past the sink cooling fins. With any conduction-cooled power tube, dissipation capability is almost completely dependent on the ability of the heat-sink system to carry heat away and the temperature limitations of the tube itself. Thus the 200-watt dissipation rating of the 8873 is a nominal value only, as illustrated by the fact that the same tube, with an axial-flow air radiator installed (the 8874) is rated for 400 watts of dissipation under specified cooling conditions.

In all cases, temperature of the tube anode and the ceramic/metal seals is the limiting factor, and the equipment designer is encouraged to use temperature-sensitive paint or other temperature-sensing devices in connection with any equipment design before the layout is finalized.

8874 -Forced-air cooling must be provided to maintain the anode core and seal temperatures within maximum rating. The cooling data shown is for sea level, with cooling air at 50°C, and is sufficient to limit tube temperatures to 225°C. The pressure drop figures shown are for the anode cooler only, as would be the case with a pressurized anode compartment of an equipment, where air would be required to pass through the anode cooler and then through an insulated duct to the outside of the cabinet. Some air from the pressurized anode compartment can be bled by the socket for base cooling, either by means of a somewhat oversize socket-mounting hole, or a series of small holes drilled in the chassis near the edges of the socket, in order to provide a small amount of air circulation around the base pins of the tube.

8874

Anode Diss.	Air Flow (CFM)	Approx. Press. Drop (In. H_2O)
200W	4.0	0.11
300W	6.0	0.22
400W	8.6	0.37

8875 - Forced-air cooling must be provided to maintain the anode core and seal temperatures within the maximum rating. Cooling data is shown for sea level, with cooling air at 25°C.

These figures are for the case where the cooling air is supplied from a small general-purpose fan in close proximity to the tube and directing air across the tube and through the anode cooler.

The recommended cooling is sufficient to limit tube temperatures to 225°C. The required air velocity can be checked with a simple manometer, as shown in the accompanying figure.

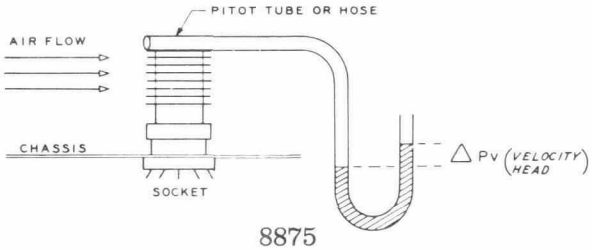

8875

Anode Diss.	Cooling Air Velocity	Vel. Head (Δ Pv) Inches of H_2O
200W	870 Ft/Min.	0.045
300W	1600 Ft/Min.	0.16

With all three tube types, the equipment designer is cautioned that it is not good practice to operate at, or close to, the absolute maximum temperature ratings for the metal/ceramic seals. Where long life and consistent performance are factors, cooling in excess of the minimum requirements outlined here is normally beneficial.

DANGER - BERYLLIUM OXIDE CERAMICS (BeO) Do not alter, grind, lap, fire, chemically clean, or perform any other operation on the SK-1920 Beryllium Oxide thermal link used with the 8873, or any other equivalent section of BeO used with the 8873. Normal use of BeO ceramics has never been considered hazardous, but the user should avoid any operation which would create BeO dust particles in the air, or fumes, which could be breathed, as these are considered dangerous.

It should be noted that none of these three tubes contains any BeO in the envelope, or internally. Only the SK-1920 thermal link is made of BeO, because of its insulating qualities combined with its high thermal conductivity.

HIGH VOLTAGE - The 8873, 8874, and 8875 operate at voltages which can be deadly, and the equipment must be designed properly and operating precautions must be followed. Equipment must be designed so that no one can come in contact with high voltages. All equipment must include safety enclosures for high-voltage circuits and terminals, with interlock switches to open the primary circuits of the power supplies and to discharge high voltage condensers whenever access doors are opened. Interlock switches must not be bypassed or "cheated" to allow operation with access doors open. Always remember that HIGH VOLTAGE CAN KILL.

OUTPUT CAPACITANCE - The interelectrode capacitance figures given in the General Characteristics are measured in a shielded fixture and do not include additonal external capacitance. Including the stray capacitance between the anode and the heat sink used with the 8873 tube will typically raise the output capacitance to somewhat more than double the measured internal value.

INTERMODULATION DISTORTION - Typical Operating Conditions, with distortion values included, are the result of data taken during actual operation a 2 Megahertz. Intermodulation values listed are those measured at the full peak envelope power noted and are referenced against one tone of a two-equal tone signal.

INPUT CIRCUIT - When any of these types is operated as a grounded-grid rf amplifier, the use of a resonant tank in the cathode circuit is recommended in order to obtain greatest linearity and power output. For best results with a single-ended amplifier it is suggested that the cathode tank circuit operate at a "Q" of five or more.

FAULT PROTECTION - All power tubes operate at voltages which can cause severe damage in the event of an internal arc, especially in those cases where large amounts of stored energy or follow-on current are involved.
Some means of protection is advised in all cases, and it is recommended that a series resistor of 25 to 50 ohms be used in the anode circuit to limit

peak current and provide a means of dissipating the energy in the event of a tube or circuit arc. For an oxide-cathode type such as these tubes are a maximum of 4 joules total energy should be permitted to be dumped into an internal arc. Amounts in excess of this may permanently damage the cathode or the grid structure.
Additional information is found in EIMAC's Application Bulletin #17 titled "FAULT PROTECTION", available on request.

SPECIAL APPLICATIONS - If it is desired to operate this tube under conditions widely different from those given here, write to Power Grid Tube Division, Varian, EIMAC Division, 301 Industrial Way, San Carlos, California 94070 for information and recommendations.

OPERATING HAZARDS

PROPER USE AND SAFE OPERATING PRACTICES WITH RESPECT TO POWER TUBES ARE THE RESPONSIBILITY OF EQUIPMENT MANUFACTURERS AND USERS OF SUCH TUBES. ALL PERSONS WHO WORK WITH OR ARE EXPOSED TO POWER TUBES OR EQUIPMENT WHICH UTILIZES SUCH TUBES MUST TAKE PRECAUTIONS TO PROTECT THEMSELVES AGAINST POSSIBLE SERIOUS BODILY INJURY. DO NOT BE CARELESS AROUND SUCH PRODUCTS.

The operation of power tubes involves one or more of the following hazards, any one of which, in the absence of safe operating practices and precautions, could result in serious harm to personnel:

a. HIGH VOLTAGE - Normal operating voltages can be deadly.

b. RF RADIATION - Exposure to strong rf fields should be avoided, even at relatively low frequencies. The dangers of rf radiation are more severe at UHF and microwave frequencies and can cause serious bodily and eye injuries. CARDIAC PACEMAKERS MAY BE AFFECTED.

c. X-RAY RADIATION - High voltage tubes can produce dangerous and possibly fatal x-rays.

d. BERYLLIUM OXIDE POISONING - Dust or fumes from BeO ceramics used as thermal links with some conduction-cooled power tubes are highly toxic and can cause serious injury or death.

e. GLASS EXPLOSION - Many electron tubes have glass envelopes. Breaking the glass can cause an implosion, which will result in an explosive scattering of glass particles. Handle glass tubes carefully.

f. HOT WATER - Water used to cool tubes may reach scalding temperatures. Touching or rupture of the cooling system can cause serious burns.

g. HOT SURFACES - Surfaces of air-cooled radiators and other parts of tubes can reach temperatures of several hundred degrees centigrade and cause serious burns if touched.

Please review the detailed operating hazards sheet enclosed with each tube or request a copy from the address shown below: Power Grid Tube Division, EIMAC Division of Varian, 301 Industrial Way, San Carlos, California 94070.

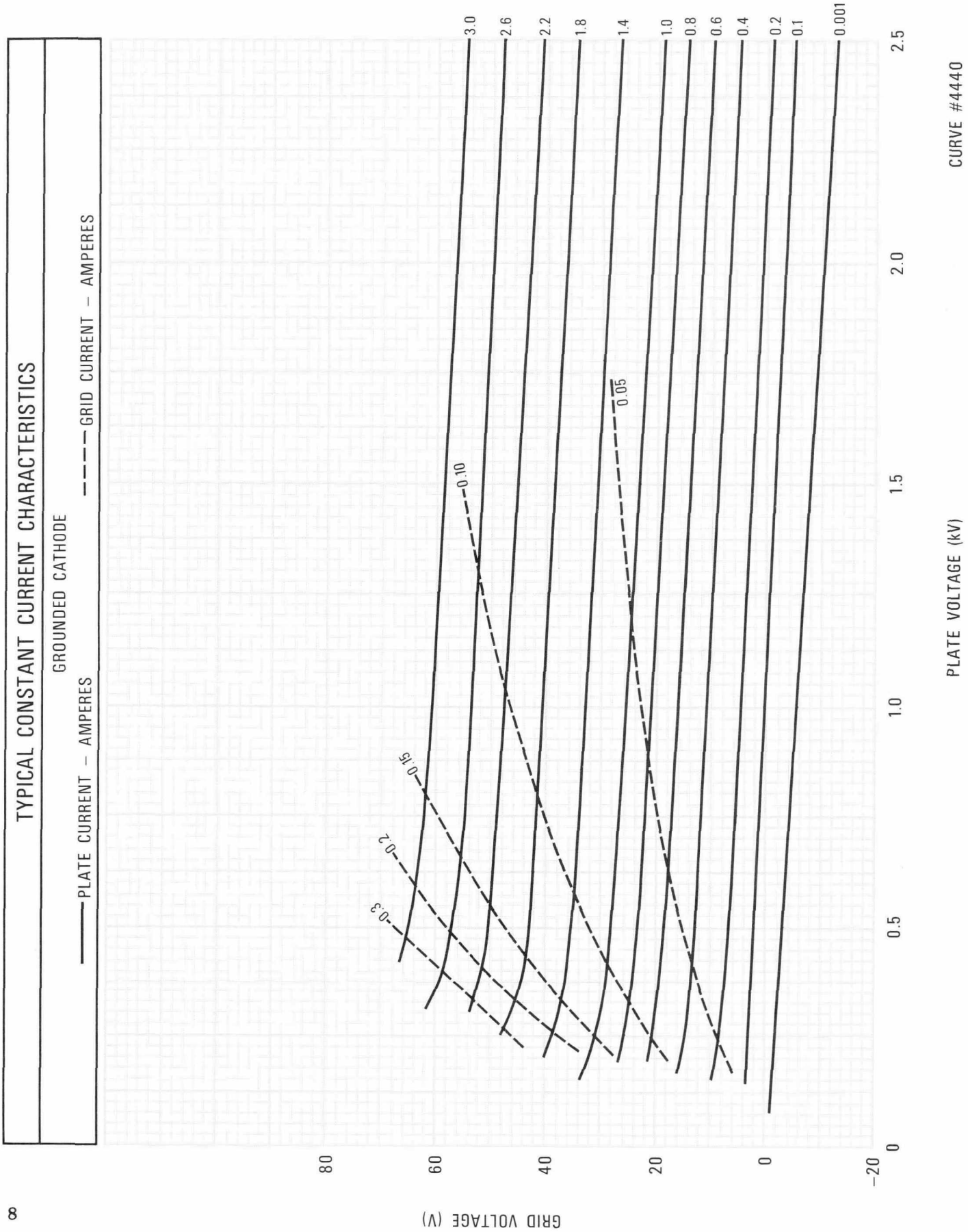
TYPICAL CONSTANT CURRENT CHARACTERISTICS
GROUNDED CATHODE
PLATE CURRENT – AMPERES
GRID CURRENT – AMPERES
3.0
2.6
2.2
1.8
1.4
1.0
0.8
0.6
0.4
0.2
0.1
0.001
0.10
0.05
0.15
0.2
0.3
0
0.5
1.0
1.5
2.0
2.5
80
60
40
20
0
–20
GRID VOLTAGE (V)
PLATE VOLTAGE (kV)
CURVE #4440

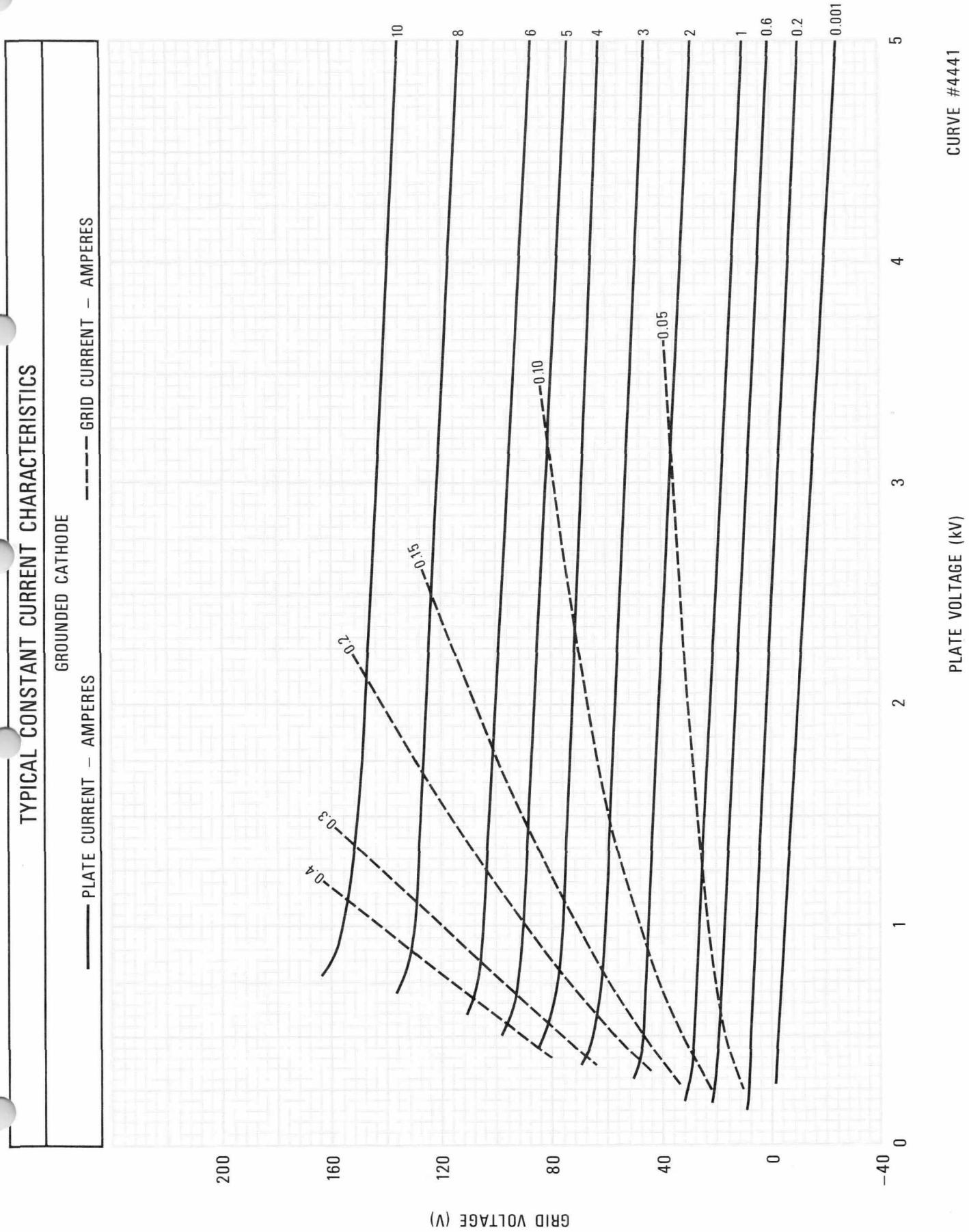
TYPICAL CONSTANT CURRENT CHARACTERISTICS
GROUNDED CATHODE
PLATE CURRENT – AMPERES
GRID CURRENT – AMPERES
10
8
6
5
4
3
2
1
0.6
0.2
0.001
0.4
0.3
0.2
0.15
0.10
0.05
200
160
120
80
40
0
−40
0
1
2
3
4
5
GRID VOLTAGE (V)
PLATE VOLTAGE (kV)
CURVE #4441

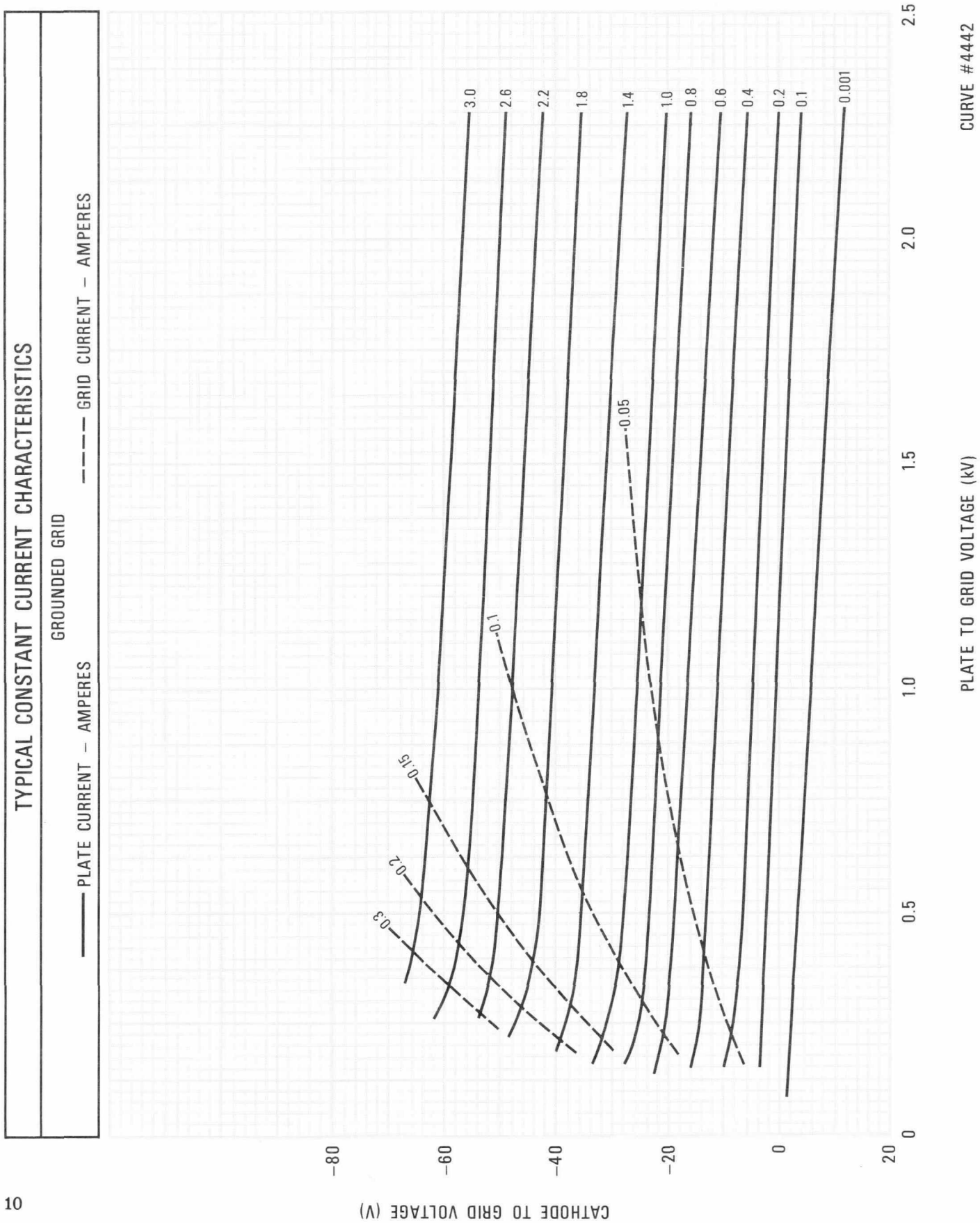
TYPICAL CONSTANT CURRENT CHARACTERISTICS
GROUNDED GRID
PLATE CURRENT - AMPERES
GRID CURRENT - AMPERES
3.0
2.6
2.2
1.8
1.4
1.0
0.8
0.6
0.4
0.2
0.1
0.001
0.05
0.1
0.15
0.2
0.3
0
0.5
1.0
1.5
2.0
2.5
20
0
-20
-40
-60
-80
PLATE TO GRID VOLTAGE (kV)
CATHODE TO GRID VOLTAGE (V)

CURVE #4442

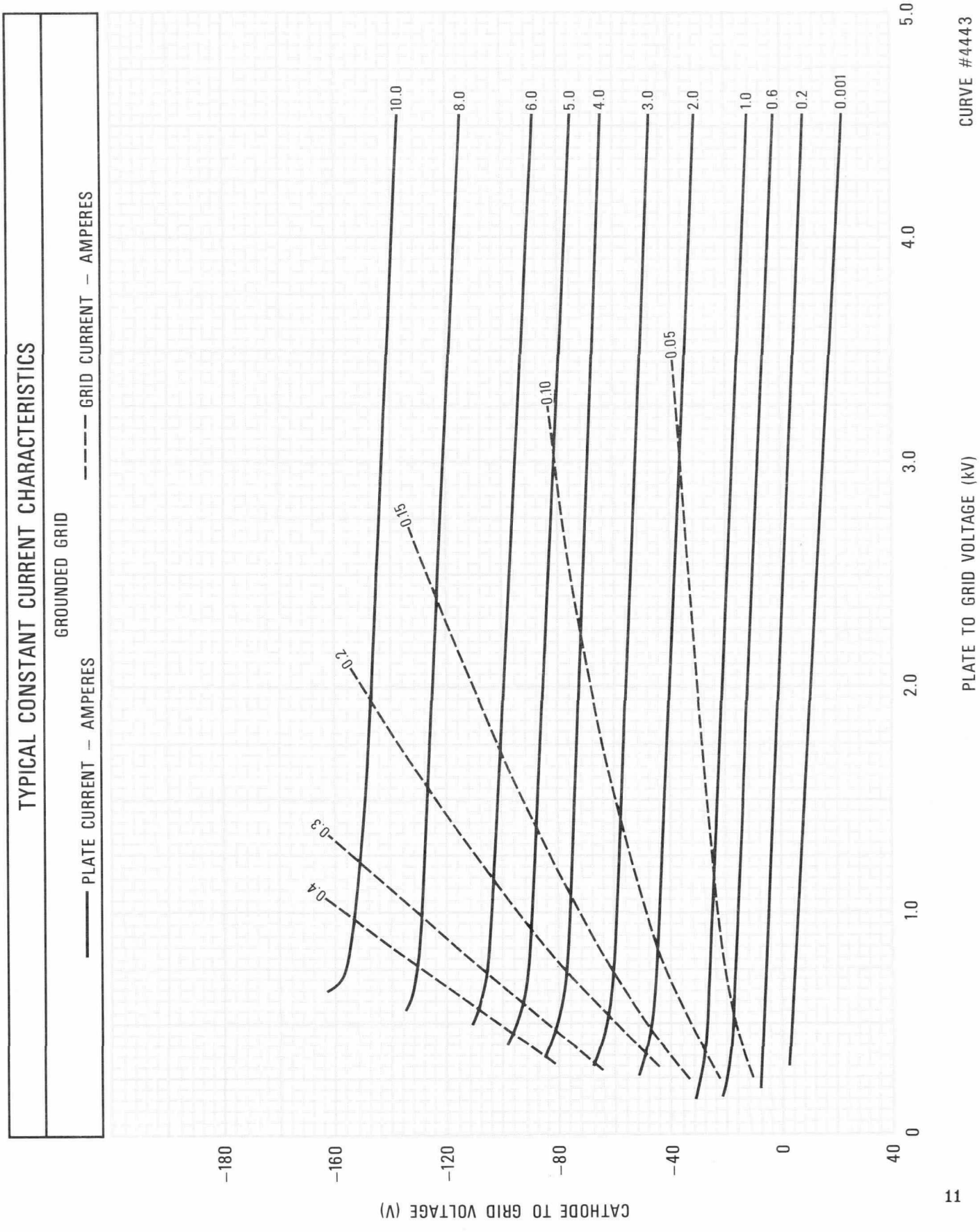
TYPICAL CONSTANT CURRENT CHARACTERISTICS
GROUNDED GRID
PLATE CURRENT – AMPERES
GRID CURRENT – AMPERES
10.0
8.0
6.0
5.0
4.0
3.0
2.0
1.0
0.6
0.2
0.001
0.05
0.10
0.15
0.2
0.3
0.4
CATHODE TO GRID VOLTAGE (V)
-180
-160
-120
-80
-40
0
40
PLATE TO GRID VOLTAGE (kV)
0
1.0
2.0
3.0
4.0
5.0

CURVE #4443

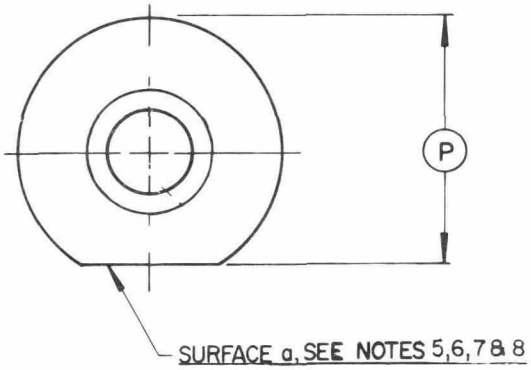

PIN NO. 1 CATHODE
PIN NO. 2 CATHODE
PIN NO. 3 CATHODE
PIN NO. 4 CONTROL GRID
PIN NO. 5 HEATER
PIN NO. 6 HEATER
PIN NO. 7 CONTROL GRID
PIN NO. 8 CATHODE
PIN NO. 9 CATHODE
PIN NO. 10 CATHODE
PIN NO. 11 CONTROL GRID

DIMENSIONAL DATA						
DIM	INCHES			MILLIMETERS		
	MIN.	MAX.	REF.	MIN.	MAX.	REF.
A	2.002	2.142	- -	50.85	54.41	- -
B	1.610	1.640	- -	40.89	41.66	- -
C	1.810	1.910	- -	45.97	48.51	- -
D	0.750	0.810	- -	19.05	20.57	- -
E	0.710	0.790	- -	18.03	20.07	- -
F	- -	1.406	- -	- -	35.71	- -
G	0.187	- -	- -	4.75	- -	- -
H	BASE E11-81 (JEDEC DESIGNATION)					
J	0.559	0.573	- -	14.20	14.55	- -
K	0.240	- -	- -	6.10	- -	- -
L	- -	- -	0.027	- -	- -	0.69
N	89°	91°	- -	89°	91°	- -
P	1.525	1.540	- -	38.73	39.12	- -
R	1.417	1.433	- -	35.99	36.40	- -

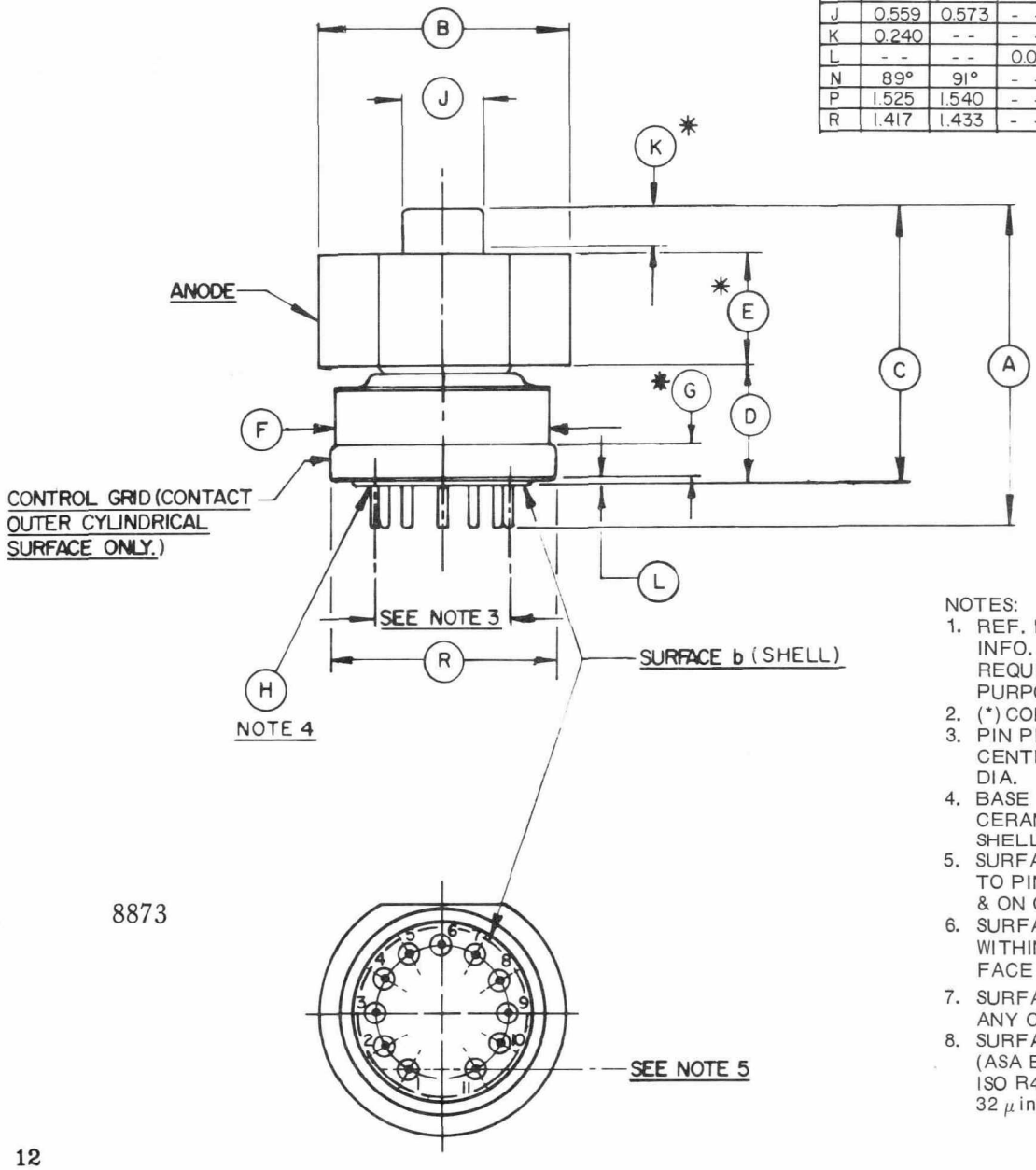

NOTES:
1. REF. DIMENSIONS ARE FOR INFO. ONLY & ARE NOT REQUIRED FOR INSPECTION PURPOSES.
2. (*) CONTACT SURFACE.
3. PIN PITCH DIA. TO BE CONCENTRIC TO B WITHIN .040 DIA.
4. BASE IS BASIC JEDEC EXCEPT CERAMIC WAFER IS INSIDE SHELL.
5. SURFACE a TO BE PARALLEL TO PINS I & II AXIS WITHIN 2° & ON OPPOSITE SIDE.
6. SURFACE a MUST BE FLAT WITHIN .001 & PERP. TO SURFACE b WITHIN N LIMITS.
7. SURFACE a TO BE FREE OF ANY CODING OR LABELING.
8. SURFACE a ROUGHNESS (ASA B46.1-1962 OR ISO R468-66) — 32 μin. 6.8 μm.

PIN No.1: CATHODE
PIN No.2: CATHODE
PIN No.3: CATHODE
PIN No.4: GRID
PIN No.5: HEATER
PIN No.6: HEATER
PIN No.7: GRID
PIN No.8: CATHODE
PIN No.9: CATHODE
PIN No.10: CATHODE
PIN No.11: GRID

DIMENSIONAL DATA						
DIM	INCHES			MILLIMETERS		
	MIN.	MAX.	REF.	MIN.	MAX.	REF.
A	2.002	2.142	- -	50.85	54.41	- -
B	1.610	1.640	- -	40.89	41.66	- -
C	1.810	1.910	- -	45.97	48.51	- -
D	0.750	0.810	- -	19.05	20.57	- -
E	0.710	0.790	- -	18.03	20.07	- -
F	- -	1.406	- -	- -	35.71	- -
G	0.187	- -	- -	4.75	- -	- -
H	BASE: E11-81 (JEDEC DESIGNATION)					
J	0.559	0.573	- -	14.20	14.55	- -
K	0.240	- -	- -	6.10	- -	- -
L	- -	- -	0.027	- -	- -	0.69
M	1.417	1.433	- -	35.99	36.40	- -

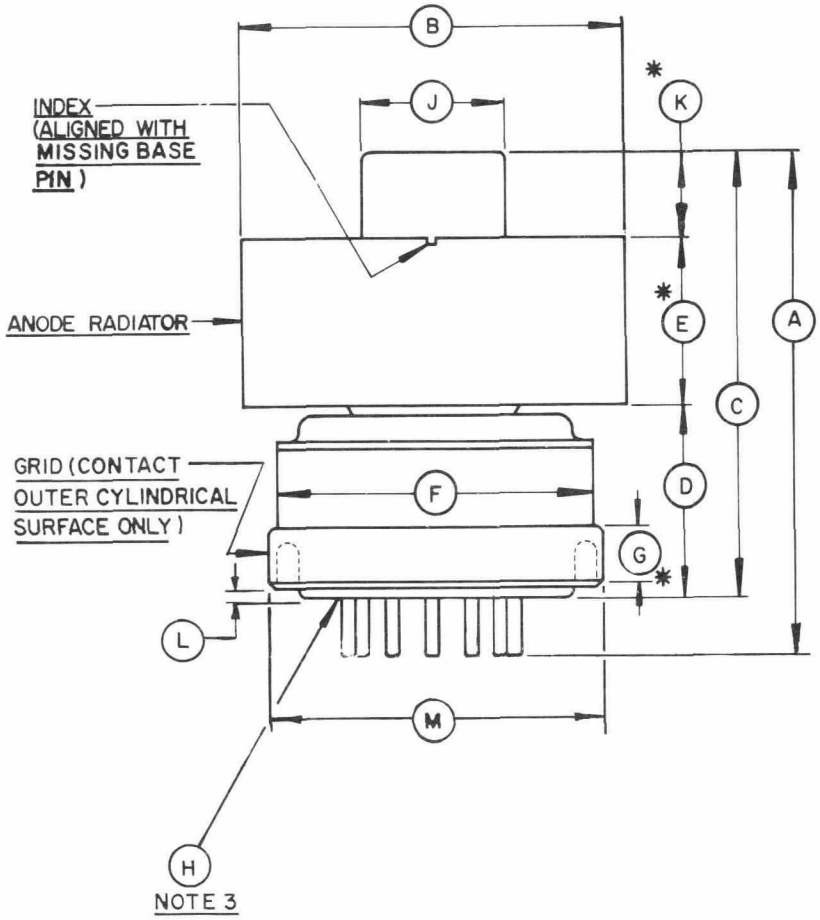

NOTES:
1. REF. DIMS. ARE FOR INFO. ONLY AND ARE NOT REQD. FOR INSPECTION PURPOSES.
2. (✱) CONTACT SURFACES.
3. BASE IS BASIC JEDEC EXCEPT CERAMIC WAFER IS INSIDE SHELL

8874

PIN No. 1, 2, 3, 8, 9, 10 CATHODE
PIN No. 4, 7, 11 CONTROL GRID
PIN No. 5, 6 HEATER

DIMENSIONAL DATA						
	INCHES			MILLIMETERS		
DIM.	MIN.	MAX.	REF.	MIN.	MAX.	REF.
A		2.185			55.50	
B	2.480	2.520		62.99	64.01	
C	1.867	1.997		47.42	50.72	
D	1.544	1.674		39.22	42.52	
E	.780	.860		19.81	21.48	
F			1.406			35.71
G	.187			4.75		
H	BASE E11-81 (JEDEC DESIGNATION)					
J	.559	.573		14.20	14.55	
K	.240			6.10		
L		2.050			52.07	
M			.135			3.43
N			.050			1.27
P			.838			21.28
R	1.417	1.433		35.99	36.40	

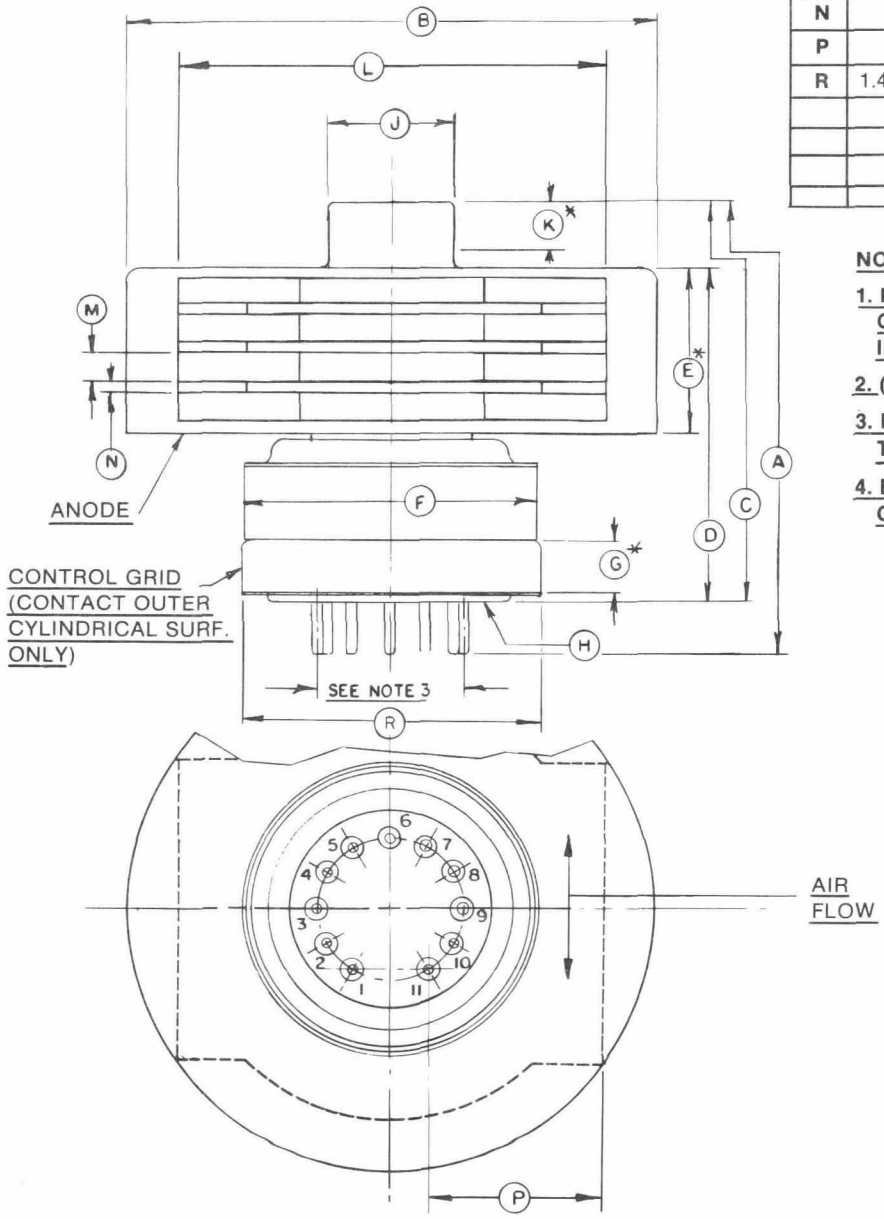

NOTES:

1. REF DIMENSIONS ARE FOR INFO ONLY & ARE NOT REQUIRED FOR INSPECTION PURPOSES.
2. (*) CONTACT SURFACE.
3. PIN PITCH DIA. TO BE CONCENTRIC TO B WITHIN .040 DIA.
4. BASE IS BASIC JEDEC EXCEPT CERAMIC WAFER IS INSIDE SHELL.

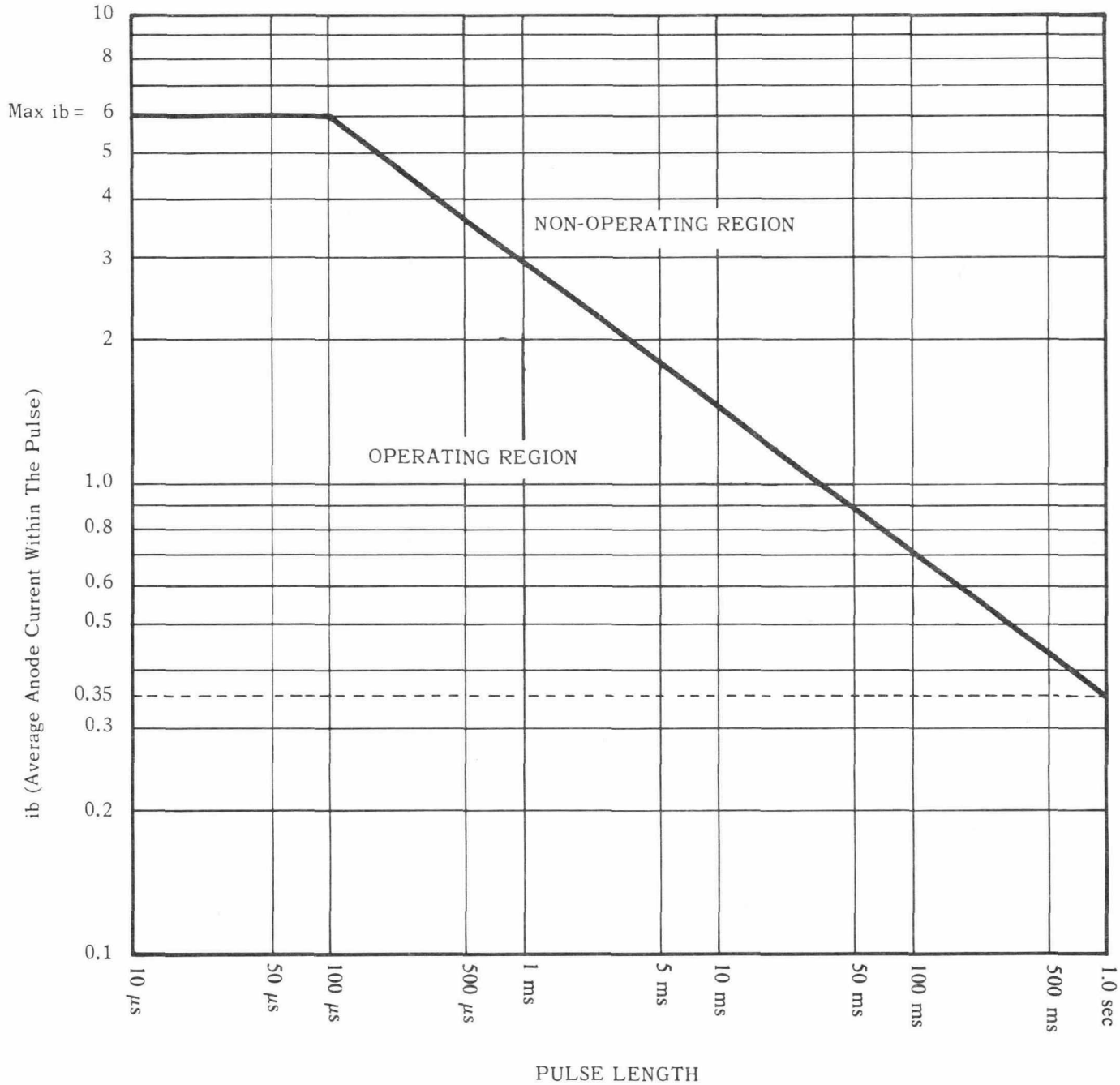

Pulse anode current (ib) capability is dependent on pulse length (tp) and duty factor (Du). Maximum ib for a given tp is shown; maximum Du may then be derived from the relationship: $0.350 = ib \sqrt{Du}$

PULSE DERATING CHART, TYPES 8873, 8874, 8875

PULSE MODULATOR OR REGULATOR SERVICE