8755/8755A

TECHNICAL DATA

HIGH-MU
PLANAR TRIODE

The 8755/8755A is a miniature, ceramic/metal, rugged planar triode for advanced airborne and space applications up to 3.0 GHz.

The 8755/8755A may be used as an amplifier, oscillator, or frequency multiplier in the grid- or plate-pulsed mode, as well as a modulator or regulator tube. In addition to low interelectrode capacitances, high transconductance and amplification factor, the 8755/8755A has an anode designed to produce frequency stability, and an arc-resistant cathode, both assuring stable, reliable and long-life operation under adverse conditions.

The 8755/8755A is supplied without radiator and may be conduction, convection, heat sink, or liquid cooled. Radiators for forced-air cooling, permitting an anode dissipation up to 150 watts, can be furnished on separate order.

The 8755/8755A is especially designed for applications where high rf pulse power is required. It can also be readily used in switch tube applications up to 8 kV dc.

The 8755A is identical to the 8755 in all respects except that the 8755A is furnished with a spewing shield. With this, this tube will exhibit longer life in the same applications and should be used where long tube life is of major concern.

GENERAL CHARACTERISTICS[1]

ELECTRICAL

Cathode: Oxide Coated, Unipotential		
Heater: Voltage	6.3 ± 0.3	V
Current, at 6.3 volts	1.30	A
Transconductance (Average):		
I_b = 160 mA (200 mA/cm^2)	38	mmhos
Amplification Factor (Average):	135	
Direct Interelectrode Capacitances (Grounded Cathode)[2]		
Cgk	9.5	pF
Cpk	0.06	pF
Cgp	1.05	pF
Cut-off Bias[3]	-20	V max.

1. Characteristics and operating values are based upon performance tests. These figures may change without notice as the results of additional data or product refinement. EIMAC Division of Varian should be consulted before using this information for final equipment design.

2. Capacitance values for a cold tube as measured in a special shielded fixture. When the cathode is heated to the proper temperature, the grid-cathode capacitance will increase from the cold value by approximately 1 pF due to thermal expansion of the cathode.

3. Measured with one milliampere plate current and a plate voltage of 1 kVdc.

(Revised 6-1-71) © by Varian Printed in U.S.A.

MECHANICAL

Maximum Overall Dimensions:	
Length	1.37 in; 34.75 mm
Diameter	0.785 in; 19.94 mm
Net Weight	0.56 oz; 16 gm
Operating Position	Any
Maximum Operating Temperature:	
Ceramic/Metal Seals	250°C
Anode Core	250°C
Cooling	Conduction, convection, forced-air[1] or liquid
Terminals	Coaxial, special

1. Using one of the EIMAC radiators shown on the cooling curves.

ENVIRONMENTAL

Shock, 11 ms, non-operating	60 G
Vibration, operating, all axes 55 to 500 Hz	10 G
Altitude, max (in a suitably designed circuit)	70,000 ft.

GRID PULSED OR PLATE PULSED AMPLIFIER OR OSCILLATOR

MAXIMUM RATINGS/ABSOLUTE VALUES

DC PLATE VOLTAGE (GRID PULSED)	8000	VOLTS
PEAK PULSE PLATE VOLTAGE (PLATE PULSED)	10,000	VOLTS
DC GRID VOLTAGE	-200	VOLTS
INSTANTANEOUS PEAK GRID-CATHODE VOLTAGE		
Grid negative to cathode	-700	VOLTS
Grid positive to cathode	150	VOLTS
PULSE PLATE CURRENT	5.0	AMPERES
PULSE GRID CURRENT	2.5	AMPERES
PLATE DISSIPATION[1]	150	WATTS
GRID DISSIPATION	1.5	WATTS
FREQUENCY	3.0	GIGAHERTZ
PULSE DURATION[2]	6	μsec
DUTY FACTOR[2]	.0033	

TYPICAL OPERATION
Grid-Pulsed rf Power Amplifier (1182 MHz)

DC Plate Voltage	1750	Vdc
Peak Plate Current	1.0	a
DC Grid Voltage Approx.	-20	V
Peak Grid Current	1.7	a
Filament Voltage	5.6	V
Useful Power Output (Approx.)	650	w
Plate Efficiency	37%	
RF Input Power	65	w
Gain	10	db

1. Using one of the EIMAC radiators shown on the cooling curves.
2. For application requiring longer pulse duration and/or higher duty cycle consult the nearest Varian Electron Tube and Devices Field Office, or the Product Manager, EIMAC Division of Varian, Salt Lake City, Utah.

PULSE MODULATOR OR PULSE AMPLIFIER SERVICE

MAXIMUM RATINGS/ABSOLUTE VALUES

DC PLATE VOLTAGE	8000	VOLTS
PEAK PLATE VOLTAGE	10,000	VOLTS
DC GRID VOLTAGE	-200	VOLTS
INSTANTANEOUS PEAK GRID-CATHODE VOLTAGE		
Grid negative to cathode	-750	VOLTS
Grid positive to cathode	150	VOLTS
PULSE CATHODE CURRENT	7.5	AMPERES
DC PLATE CURRENT	150	MILLIAMPERES
PLATE DISSIPATION[1]	150	WATTS
GRID DISSIPATION	1.5	WATTS
PULSE DURATION[2]	6	μs
DUTY FACTOR[2]	.0033	
CUT-OFF MU	90	

1. Using one of the EIMAC radiators shown on the cooling curves.
2. For application requiring longer pulse duration and/or higher duty cycle consult the nearest Varian Electron Tube and Device Field Office, or the Product Manager EIMAC Division of Varian, Salt Lake City, Utah.

RANGE VALUES FOR EQUIPMENT DESIGN

	Min.	Max.	
Heater: Current at 6.3 volts	1.20	1.40	A
Cathode Heating Time	60	---	sec.
Interelectrode Capacitances [1] (grounded cathode connection)			
Cgk	8.5	10.5	pF
Cpk	---	0.06	pF
Cgp	0.9	1.2	pF

1. Capacitance values for a cold tube as measured in a special shielded fixture. When the cathode is heated to the proper temperature, the grid-cathode capacitance will increase from the cold value by approximately 1 pF due to thermal expansion of the cathode.

APPLICATION

COOLING - The 8755/8755A can be cooled by conduction, convection, forced-air or liquid cooling. The tube is designed to permit high-temperature operation up to the limit indicated. However, if long life is the prime objective, tube terminal and seal temperatures should be kept well below 250°C. If forced-air cooling is provided, auxiliary air flow, apart from the air flowing through the radiator, should be provided to cool the tube envelope and other tube terminals. Some conduction cooling is always provided through the contact terminals. However, these terminals usually exhibit poor heat transfer, often having a temperature gradient across them as high as 50°C. Cooling curves are given for the three radiators which are suitable for use with the 8755/8755A.

For further details on cooling or other aspects of tube operation, refer to EIMAC bulletin #15, "Operating Data for Planar Triodes."

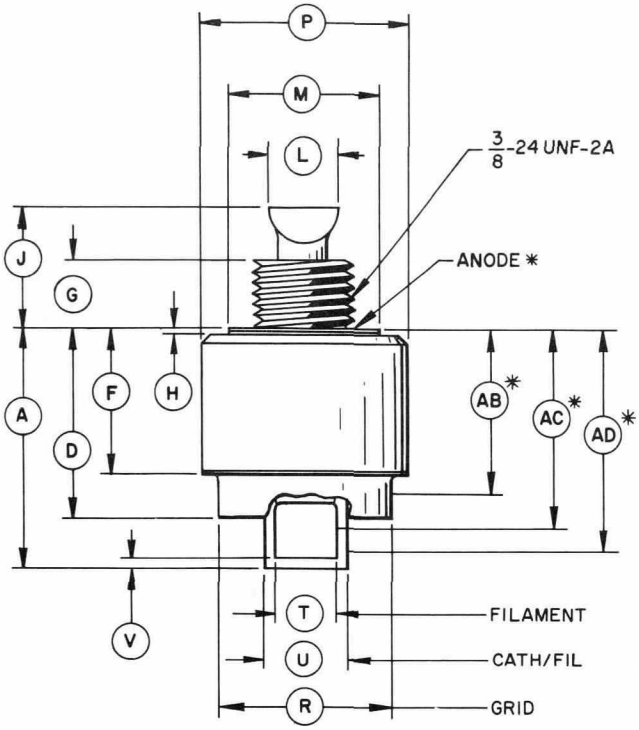

DIMENSIONAL DATA						
DIM.	INCHES			MILLIMETERS		
	MIN.	MAX.	REF.	MIN.	MAX.	REF.
A	- -	1.020	- -	- -	25.91	- -
D	0.740	0.800	- -	18.80	20.32	- -
F	- -	0.570	- -	- -	14.48	- -
G	0.150	0.170	- -	3.81	4.32	- -
H	- -	0.040	- -	- -	1.02	- -
J	- -	0.350	- -	- -	8.89	- -
L	- -	0.260	- -	- -	6.60	- -
M	0.545	0.570	- -	13.84	14.48	- -
P	0.775	0.785	- -	19.69	19.94	- -
R	0.650	0.670	- -	16.51	17.02	- -
T	0.210	0.225	- -	5.33	5.72	- -
U	0.310	0.330	- -	7.87	8.38	- -
V	- -	0.040	- -	- -	1.02	- -
AB	0.590	0.740	- -	14.99	18.80	- -
AC	0.760	0.885	- -	19.30	22.48	- -
AD	0.800	0.975	- -	20.32	24.77	- -

NOTES

1. REF. DIMS. ARE FOR INFO. ONLY AND ARE NOT REQ'D. FOR INSPECTION PURPOSES.
2. (*) CONTACT SURFACE.
3. ANODE FLANGE IS ELECTRICAL CONTACT. STUD IS FOR HEAT TRANSFER.

EIMAC RADIATORS

RADIATOR 014653

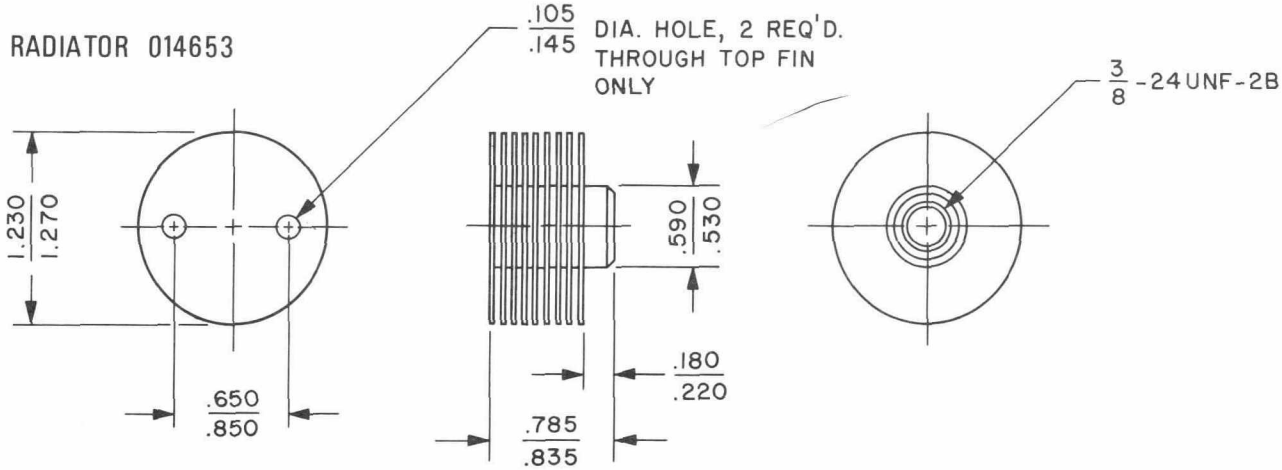

RADIATOR 158594

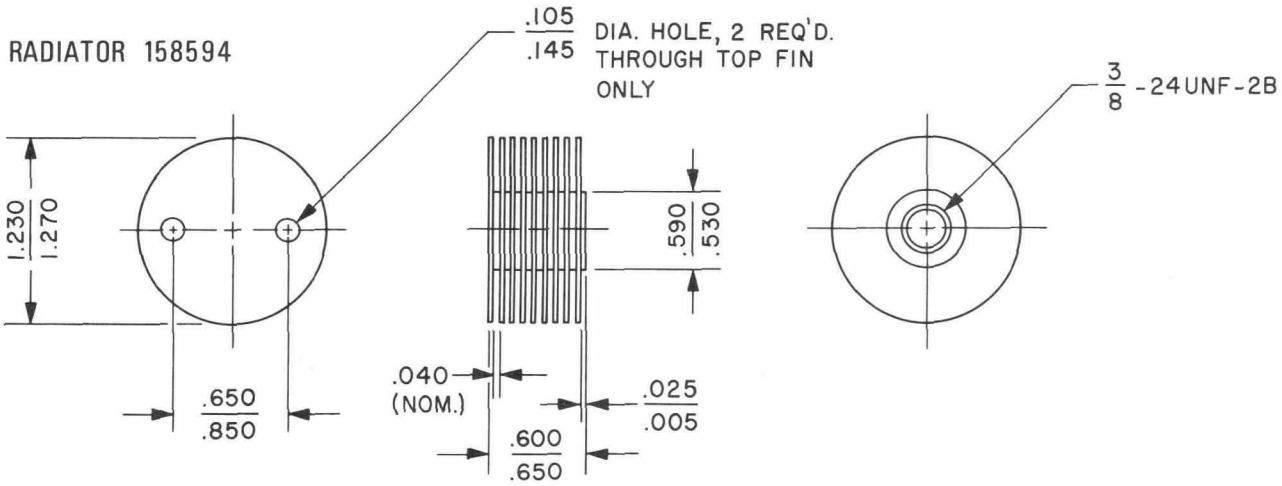

RADIATOR 158593

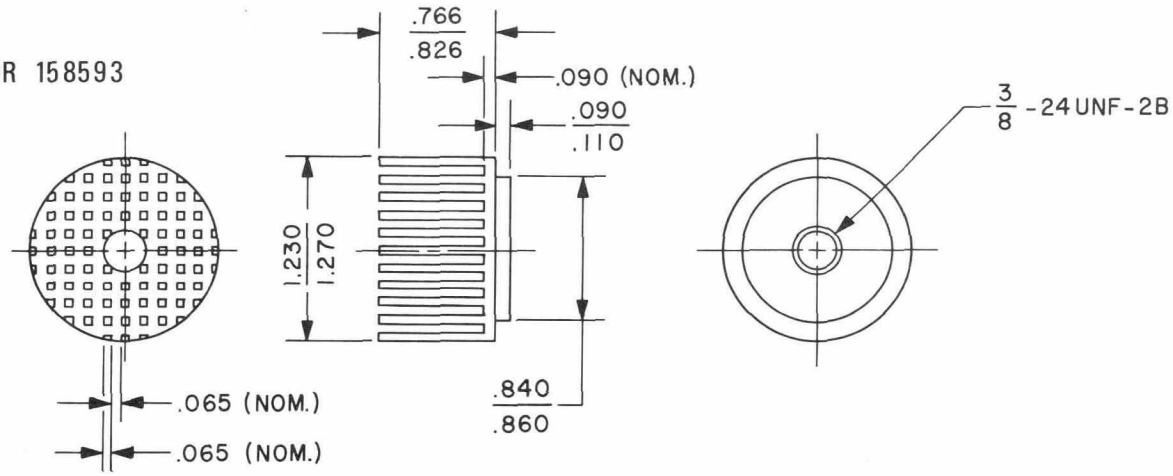

COMBINED CORRECTION FACTORS FOR INLET AIR TEMPERATURE AND ALTITUDE

(RELATIVE TO 25°C AND SEA LEVEL)

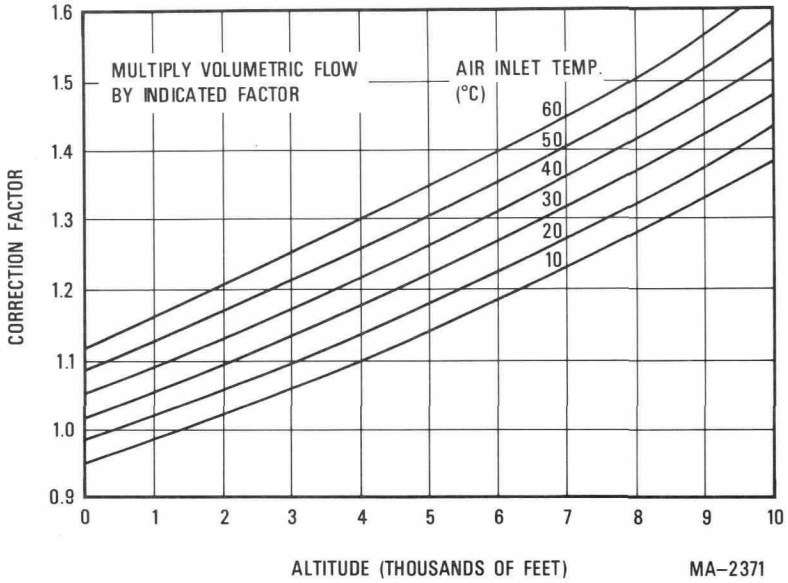

PLATE DISSIPATION VARIATION WITH COOLING AIR FLOW

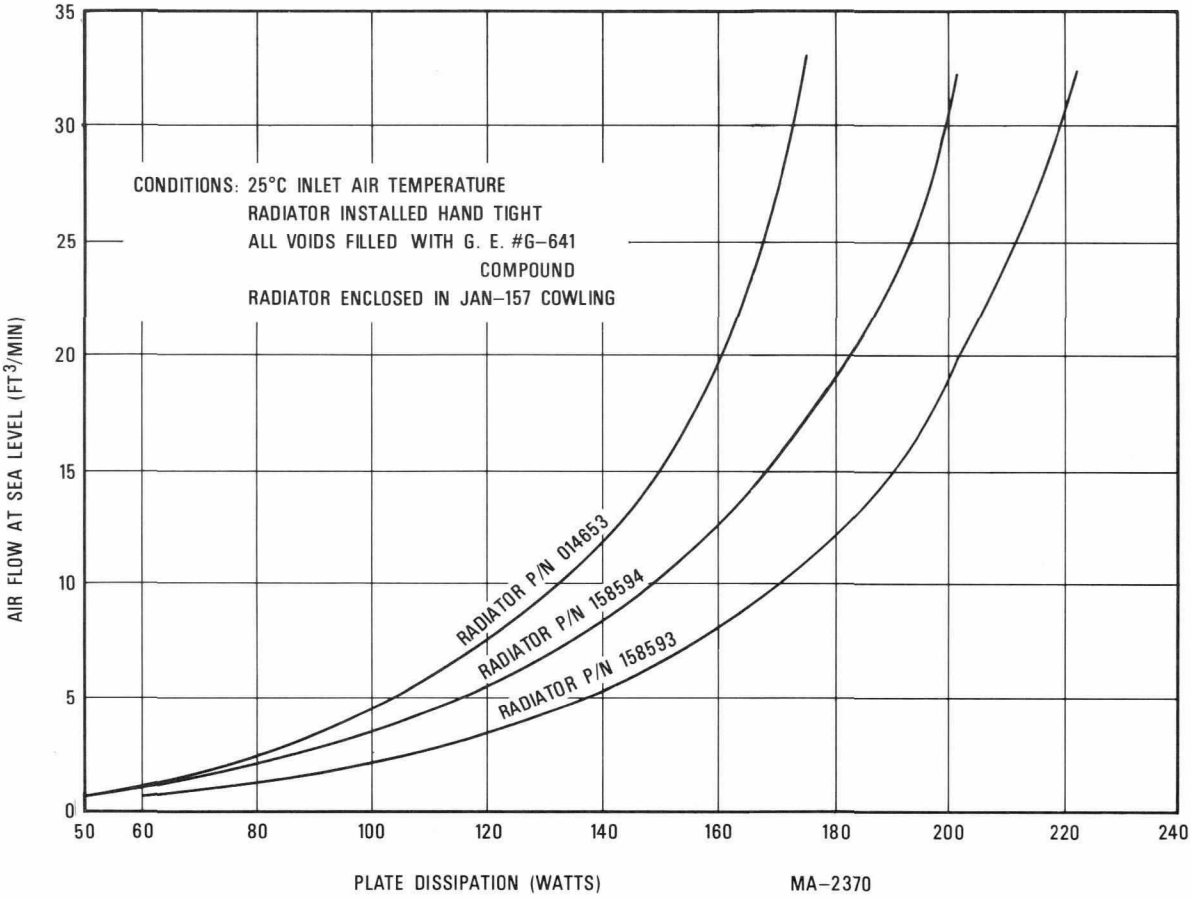

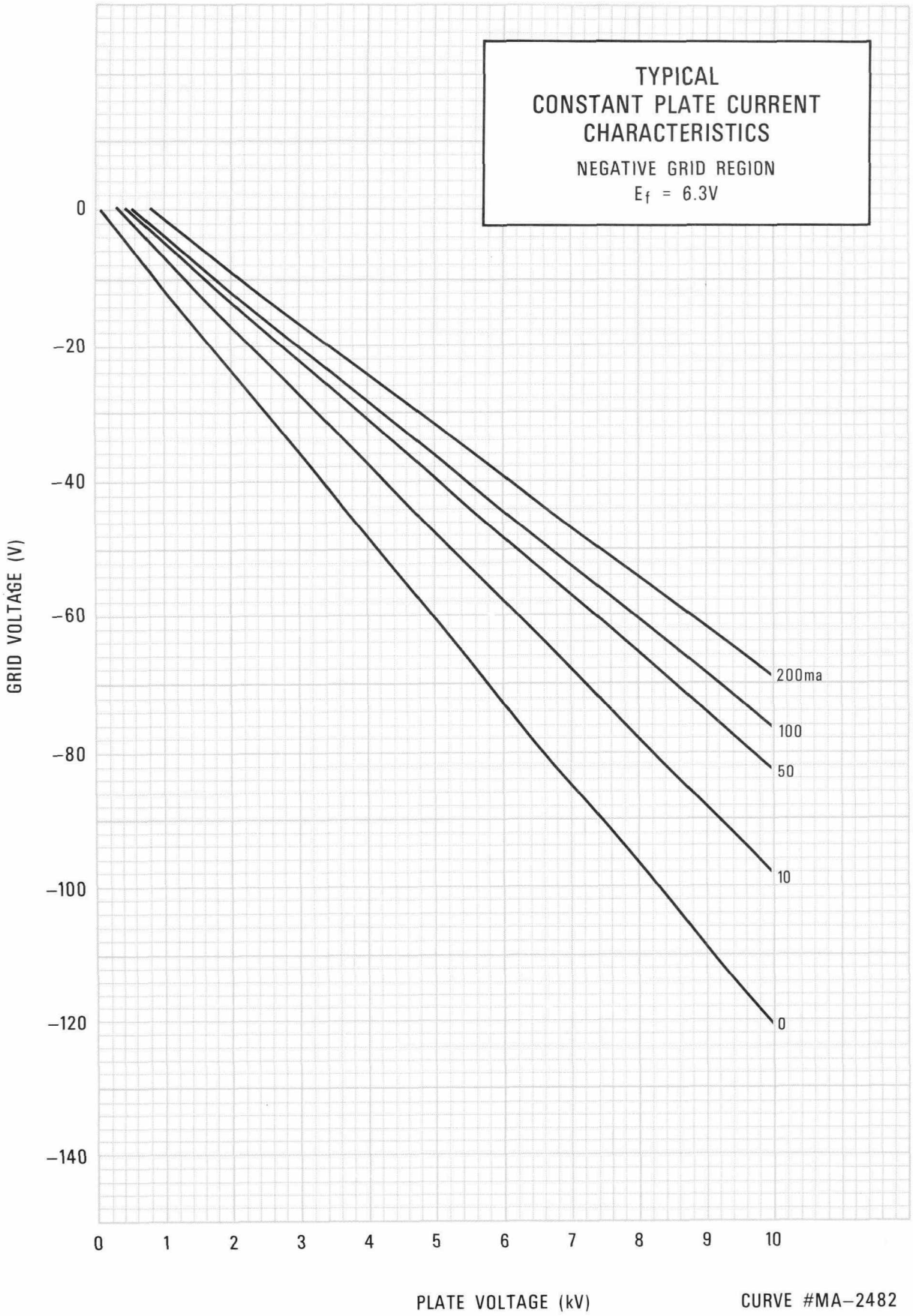
TYPICAL
CONSTANT PLATE CURRENT
CHARACTERISTICS
NEGATIVE GRID REGION
Ef = 6.3V
0
-20
-40
-60
-80
-100
-120
-140
GRID VOLTAGE (V)
200ma
100
50
10
0
0
1
2
3
4
5
6
7
8
9
10
PLATE VOLTAGE (kV)
CURVE #MA-2482

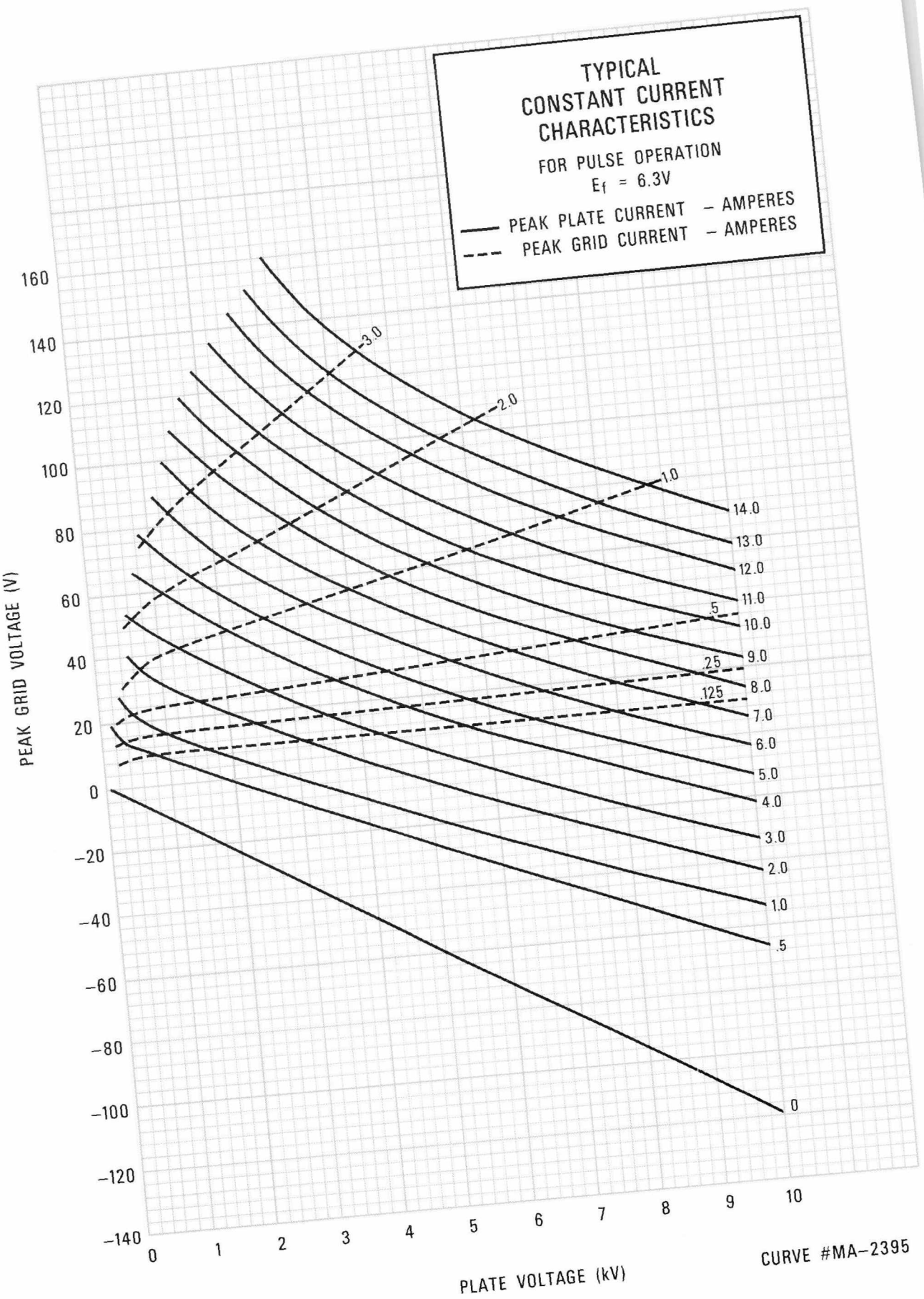
TYPICAL
CONSTANT CURRENT
CHARACTERISTICS
FOR PULSE OPERATION
E_f = 6.3V
PEAK PLATE CURRENT – AMPERES
PEAK GRID CURRENT – AMPERES
PEAK GRID VOLTAGE (V)
160
140
120
100
80
60
40
20
0
–20
–40
–60
–80
–100
–120
–140
0
1
2
3
4
5
6
7
8
9
10
PLATE VOLTAGE (kV)
3.0
2.0
1.0
.5
.25
.125
14.0
13.0
12.0
11.0
10.0
9.0
8.0
7.0
6.0
5.0
4.0
3.0
2.0
1.0
.5
0
CURVE #MA–2395

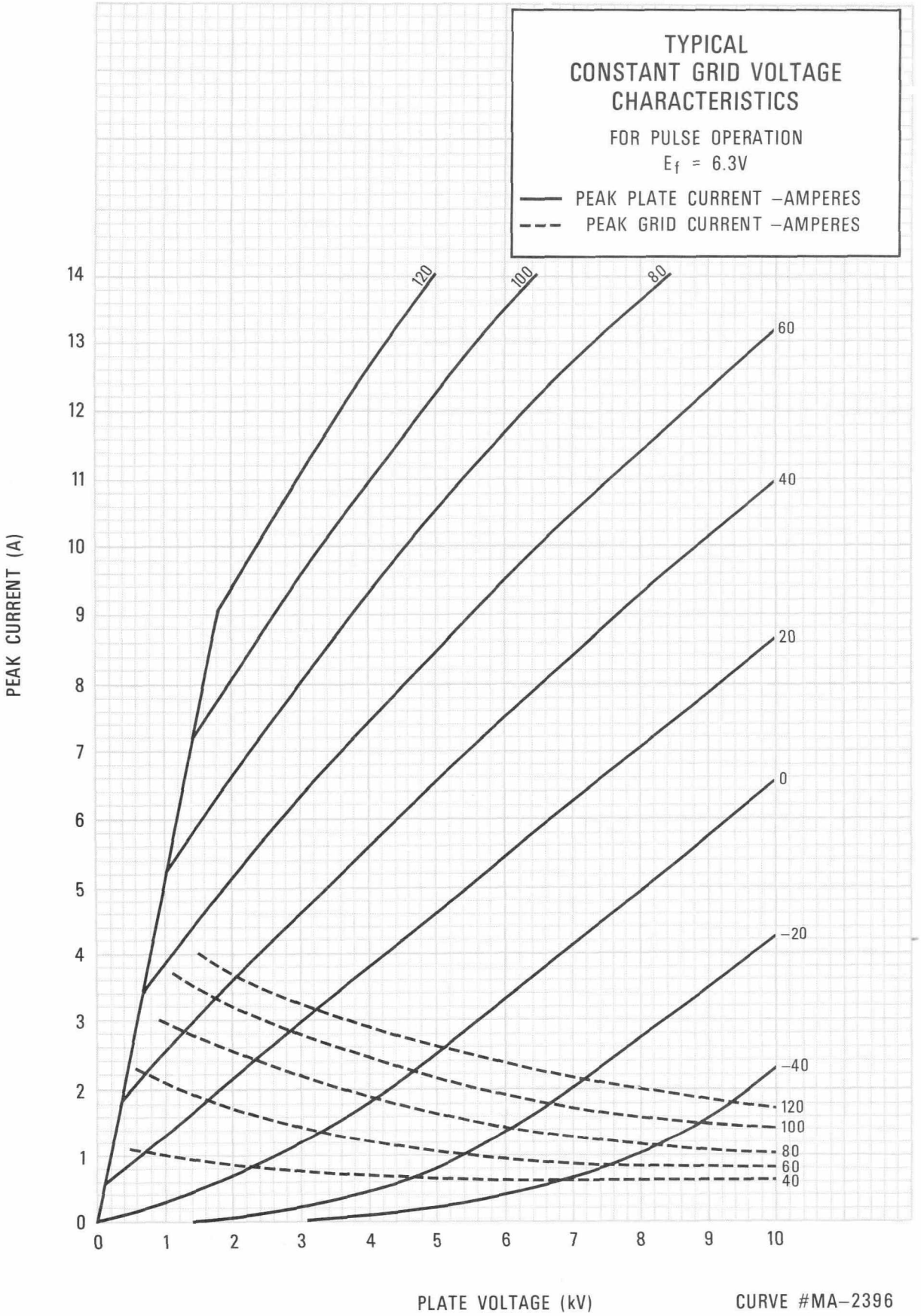
TYPICAL
CONSTANT GRID VOLTAGE
CHARACTERISTICS
FOR PULSE OPERATION
Ef = 6.3V
PEAK PLATE CURRENT –AMPERES
PEAK GRID CURRENT –AMPERES
PEAK CURRENT (A)
PLATE VOLTAGE (kV)
CURVE #MA–2396
120
100
80
60
40
20
0
–20
–40
120
100
80
60
40
0
1
2
3
4
5
6
7
8
9
10
11
12
13
14