TECHNICAL DATA

869B
869BL
MERCURY-VAPOR RECTIFIERS

The EIMAC 869B and 869BL are half-wave mercury-vapor rectifiers incorporating features which enable them to withstand high peak inverse voltages and to conduct at relatively low applied voltages. The 869B and 869BL carry maximum ratings of 20 kV peak inverse voltage, 5 amperes dc and 20 amperes peak cathode current.

GENERAL CHARACTERISTICS

ELECTRICAL

Filament: Oxide-coated	
Voltage	5.0 V
Current	17 to 21 A
Filament Heating Time	60 Sec
Anode Starting Voltage (approx.)	30 V

MECHANICAL

Base	See Drawing
Maximum Overall Dimensions:	
Length	14-7/16 in.
Diameter	3 in.
Net Weight	20 oz.

MAXIMUM RATINGS (Single Tube)

CONDENSED MERCURY TEMPERATURE RANGE*	30-60	30-50	30-40° C
PEAK INVERSE ANODE VOLTAGE	10	15	20 MAX KV
PEAK ANODE CURRENT:			
Quadrature Excitation**	20	20	20 MAX AMPS
In-Phase Excitation	10	10	10 MAX AMPS
AVERAGE ANODE CURRENT: (30 second maximum averaging time)			
Quadrature Excitation	5.0	5.0	5.0 MAX AMPS
In-Phase Excitation	2.5	2.5	2.5 MAX AMPS
MAXIMUM AC SHORT-CIRCUIT CURRENT***	100	100	100 MAX AMPS

*Condensed Mercury rises approximately 20°C above ambient.
**Quadrature excitation refers to anode current and filament current 90°±30° out of phase.
***Maximum duration 100 milliseconds.
Data based on load return to center tap on filament transformer.

APPLICATION

MECHANICAL

Mounting: The 869B and 869BL must be mounted vertically, base down. The 869BL includes 3 inch insulated flexible leads with lugs.

Cooling: Provisions should be made for adequate air circulation around the tube. The temperature of the condensed mercury in the 869B and 869BL should be kept within the ranges given under "MAXIMUM RATINGS."

This temperature should be maintained at 40° ±5° C for most satisfactory operation of the tube. To measure the condensed-mercury temperature a thermocouple or small thermometer may be attached to the glass near the tube base using a small amount of putty. A condensed-mercury temperature lower than the recommended value raises the voltage at which the tube becomes conducting and tends to reduce the life of the filament. A temperature higher

(EFFECTIVE 3-16-64) COPYRIGHT 1964, 1967 BY VARIAN PRINTED IN U.S.A.

than recommended lowers the voltage at which the tube becomes conducting and reduces the peak inverse voltage rating of the tube.

In some installations a blast of air must be directed at the base of the tube to insure adequate cooling.

ELECTRICAL

Filament Voltage: For maximum tube life, the filament voltage as measured directly at the filament pins, should be held at the rated value of 5.0 volts. Unavoidable variations in filament voltage must be kept within the range of 4.8 to 5.2 volts. A filament voltage less than the minimum recommended value may cause a high tube voltage drop, with consequent bombardment of the filament and eventual loss of emission. A filament voltage higher than the recommended maximum value will also decrease the life of the filament.

Caution should be observed in measuring the filament voltage as the filament circuit may be at a high dc potential.

The filament should be allowed to reach operating temperature before the plate voltage is applied Under normal conditions, a delay of approximately 60 seconds will be required. The delay time should be increased if there is any evidence of arc-back within the tube.

When it is necessary to use a shield around the tube care must be taken to insure adequate ventilation and maintenance of normal condensed-mercury temperature. When a mercury-vapor rectifier is first installed, the filament should be operated at normal voltage for approximately ten minutes with no plate voltage applied, in order that the mercury may be properly distributed.

X-Ray Radiation: Above approximately 16,000 peak inverse voltage, a rectifier will produce X-Rays. In most equipment, there is adequate shielding so that this does not constitute a health hazard, however, this should be checked in any new equipment. A standard reference on this subject is "X-Ray Protection, Handbook No. 93," National Bureau of Standards.

Shielding: Electromagnetic and electrostatic fields tend to cause the mercury vapor to break down, are detrimental to tube life and make proper operation difficult. Consequently, the 869B and 869BL should be isolated from such fields as exist around a transmitter or other similar equipment.

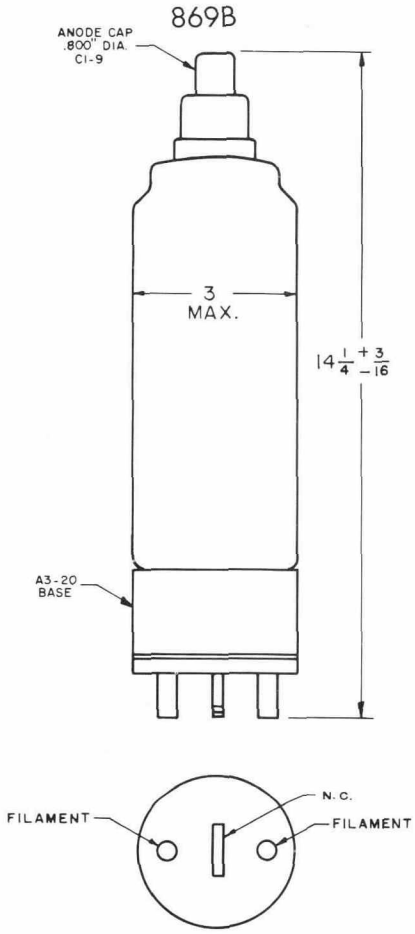

(S-254)

NOTE: These dimensions reflect standard manufacturing tolerances. They should not be made the basis for purchase specifications unless checked with EIMAC Division of Varian, 301 Industrial Way, San Carlos, California, 94070.

869BL has 3 inch insulated flexible filament leads with spade terminals for #10 screw instead of pins shown on the 869B outline.