EITEL-McCULLOUGH, INC.
SAN BRUNO, CALIFORNIA

866A 866 MERCURY VAPOR RECTIFIER

The Eimac 866-A/866 is a half-wave mercury-vapor rectifier incorporating features which enable it to withstand high peak-inverse voltages and to conduct at relatively low applied-voltages. The shielded ribbon filament, edgewise-wound, provides a large emission reserve and long life.

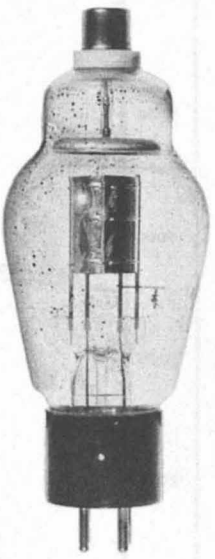

GENERAL CHARACTERISTICS

ELECTRICAL

Filament: Coated		
Voltage	2.5	volts
Current	5.0	amperes
Tube Voltage Drop (approx.)	15	volts

MECHANICAL

Base	Medium 4-pin bayonet, RMA A4-10	
Basing	See base connection diagram	
Maximum Overall Dimensions:		
Length	6.5	inches
Diameter	2.5	inches
Net Weight (Approx.)	2	ounces
Shipping Weight (Average)	0.5	pounds

MAXIMUM RATINGS (single tube)

PEAK INVERSE ANODE VOLTAGE	2,000	5,000	10,000	MAX. VOLTS
PEAK ANODE CURRENT	2.0	1.0	1.0	MAX. AMPERES
AVERAGE ANODE CURRENT	0.5	0.25	0.25	MAX. AMPERES
SUPPLY FREQUENCY	150	1,000	150	MAX. C. P. S.
CONDENSED-MERCURY TEMPERATURE RANGE[1]	25-70	25-70	25-60	°C

[1]Operation at 40 degrees plus or minus 5 degrees C is recommended.

APPLICATION

MECHANICAL

MOUNTING—The 866-A/866 must be mounted vertically, base down.

COOLING—Provision should be made for adequate air circulation around the tube, because cooling is accomplished by convection. The temperature of the condensed-mercury in the 866-A/866 should be kept within the ranges given under "MAXIMUM RATINGS". This temperature should be maintained at 40 degrees plus or minus 5 degrees C for most satisfactory operation of the tube. To measure the condensed-mercury temperature a thermocouple or small thermometer may be attached to the bulb in the area designated on the outline drawing, using a very small amount of putty. A condensed-mercury temperature lower than the recommended value raises the voltage at which the tube becomes conducting and tends to reduce the life of the filament. A temperature higher than recommended lowers the voltage at which the tube becomes conducting and tends to increase the life of the filament, but reduces the peak inverse voltage rating of the tube. When it is necessary to use a shield around the 866-A/866 care must be taken to insure adequate ventilation and maintenance of normal condensed-mercury temperature.

ELECTRICAL

FILAMENT VOLTAGE—For maximum tube life, the filament voltage as measured directly at the filament pins, should be held at the rated value of 2.5 volts. Unavoidable variations in filament voltage must be kept within the range of 2.38 to 2.63 volts. A filament voltage less than the minimum recommended value may cause a high tube voltage drop, with consequent bombardment of the filament and eventual loss of emission. A filament voltage higher than the recommended maximum value will also decrease the life of the filament.

CAUTION SHOULD BE OBSERVED IN MEASURING THE FILAMENT VOLTAGE, AS THE FILAMENT CIRCUIT MAY BE AT A HIGH D-C POTENTIAL.

The plate-circuit return of each tube should preferably be connected to the center tap of the transformer winding supplying the filament voltage; if this cannot be done, the return should be connected to that side of the filament to which the cathode shields are connected (pin No. 4). When the filaments of two or more tubes are connected in parallel, the filament terminals to which the cathode shields are connected should be joined. These precautions are recommended to insure uniform starting voltage for each tube when several are used in a given circuit.

The filament of the 866-A/866 should be allowed to reach operating temperature before the plate voltage is applied. Under normal conditions, a delay of approximately 30 seconds will be required. The delay time should be increased if there is any evidence of arc-back within the tube. In radio transmitter applications the filament should be kept at its rated voltage during "standby" periods to avoid delay due to warm-up. It is desirable to use a protective relay in the plate circuit to prevent the application of plate voltage before the filament has reached operating temperature. This relay should have a time delay adjustable up to a maximum of one minute.

When an 866-A/866 is first installed, the filament should be operated at normal voltage for approximately ten minutes with no plate voltage applied, in order that the mercury may be properly distributed. It will not be necessary to repeat this procedure unless the mercury is spattered on the filament and plate during subsequent handling.

SHIELDING—Electromagnetic and electrostatic fields tend to cause the mercury vapor to break down, are detrimental to tube life and make proper filtering difficult. Consequently, the 866-A/866 should be isolated from such fields as exist around a transmitter or other similar equipment. When the tubes are located in the region of such fields, shielding with adequate ventilation should be used around the tubes. R-f filtering should also be employed when the tubes are affected by r-f voltages.

FILTERING—The nomograph for circuits 1 and 3, and tables for circuits 2, 4 and 5 give empirical values of inductance and capacitance for a single-section choke-input filter which will keep the peak plate current below the maximum rated value, provided the average d-c load current does not exceed the maximum load current indicated. The values of L and C are based on a power-supply frequency of 60 cycles.

The value of the capacitor is made small enough to prevent excessive surges when power is first applied to the circuit. If the available inductance is larger than the minimum allowable value, the capacitance may be increased proportionately over its nomograph or table maximum. In a two-section filter with two unequal inductances, the input inductances should be the larger. The maximum value of each capacitor in such a filter is based upon the value of the preceding inductance.

In the single phase circuits (1 and 3), if the current drawn by the load is reduced or varies under operating conditions to values less than approximately 70% of the indicated maximum d-c load current, a swinging (input) choke will supply the necessary additional inductance to prevent the voltage from rising, and will afford proper filtering over a much greater current range.

Arrangements such as those shown in Circuits 1, 2 and 3 produce less than 5% ripple voltage when a two-section filter with minimum inductance and corresponding maximum capacitance is employed. Circuits such as those shown in circuits 4 and 5 will produce less than 1% ripple voltage. Better filtering may be obtained with any of these circuits by using larger values of inductance than the minimum indicated. Still greater improvement may be had by then proportionately increasing the corresponding capacitor values.

When "condenser input" filter is used, the peak current will be relatively high in respect to the usable load current, and the voltage across the capacitor may be as high as 1.4 times the nominal RMS voltage of the transformer.

For parallel operation of 866-A/866 rectifiers, suitable resistors or small inductors may be used in series with each plate lead to permit equal loading and starting characteristics. The inductors aid in reducing the peak current, and are more desirable due to their low d-c resistance. An approximate value for suitable resistors is 50 ohms, and for inductors, approximately one-third henry each.

(Effective 12-1-46) Copyright 1946 by Eitel-McCullough, Inc.

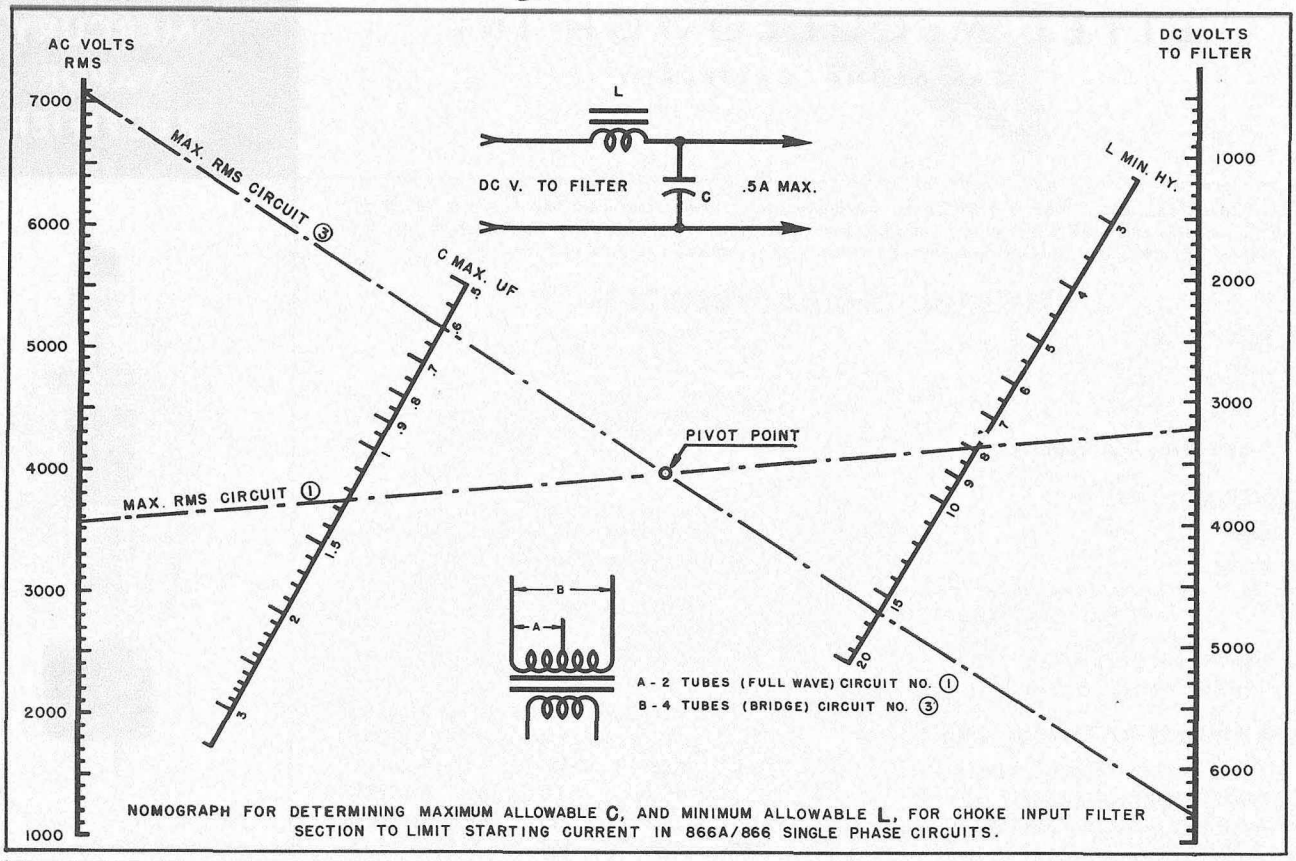

NOMOGRAPH FOR DETERMINING MAXIMUM ALLOWABLE C, AND MINIMUM ALLOWABLE L, FOR CHOKE INPUT FILTER SECTION TO LIMIT STARTING CURRENT IN 866A/866 SINGLE PHASE CIRCUITS.

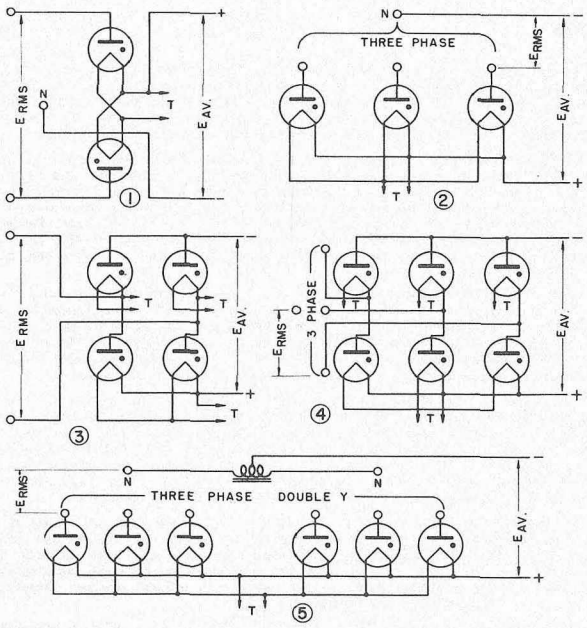

NUMBER	CIRCUIT	$E_{AVERAGE}$	$E_{INVERSE}$	$I_{AVERAGE}$
①	SINGLE - PHASE FULL - WAVE 2 TUBES	0.318 $E_{MAXIMUM}$ 0.450 E_{RMS}	3.14 $E_{AVERAGE}$	0.636 $I_{MAXIMUM}$
②	THREE - PHASE HALF - WAVE	0.827 $E_{MAXIMUM}$ 1.170 E_{RMS}	2.09 $E_{AVERAGE}$	0.827 $I_{MAXIMUM}$
③	SINGLE - PHASE FULL - WAVE 4 TUBES	0.636 $E_{MAXIMUM}$ 0.900 E_{RMS}	1.57 $E_{AVERAGE}$	0.636 $I_{MAXIMUM}$
④	THREE - PHASE FULL - WAVE	1.65 $E_{MAXIMUM}$ 2.34 E_{RMS}	1.045 $E_{AVERAGE}$	0.955 $I_{MAXIMUM}$
⑤	THREE - PHASE DOUBLE - Y PARALLEL	0.827 $E_{MAXIMUM}$ 1.170 E_{RMS}	2.09 $E_{AVERAGE}$	1.91 $I_{MAXIMUM}$

CONDITIONS ASSUMED

(1) SINE WAVE SUPPLY (2) BALANCED PHASE VOLTAGES (3) ZERO TUBE DROP (4) PURE RESISTANCE LOAD (5) NO FILTER USED

CIRCUIT	A-C INPUT VOLTS** (RMS)	MAX. D-C OUTPUT VOLTS TO FILTER	CHOKE INPUT ONE-SECTION FILTER MIN. CHOKE (L) henrys	CHOKE INPUT ONE-SECTION FILTER MAX. CONDENSER (C) uf	MAX. D-C LOAD CURRENT amperes
	per leg				
THREE-PHASE	4080	4780	3.2	1.4	0.75
HALF-WAVE	3000	3510	2.2	2.0	0.75
CIRCUIT 2	2000	2340	1.4	3.0	0.75
	1500	1750	1.1	4.0	0.75
	per leg				
THREE-PHASE	4080	9570	1.8	0.5	0.75
FULL-WAVE	3000	7020	1.4	0.7	0.75
CIRCUIT 4	2000	4680	0.9	1.2	0.75
	1500	3510	0.7	1.5	0.75
	per leg				
THREE-PHASE	4080	4780	2.0	0.5	1.5
DOUBLE-Y	3000	3510	1.5	0.7	1.5
PARALLEL	2000	2340	1.0	1.1	1.5
CIRCUIT 5	1500	1750	0.7	1.5	1.5
	per tube				
SINGLE PHASE	3535	3950	—	—	0.25
FULL-WAVE	3000	3390	—	—	0.25
(2 tubes)	2000	2260	—	—	0.25
CIRCUIT 1*	1500	1700	—	—	0.25

* With condenser input to filter.
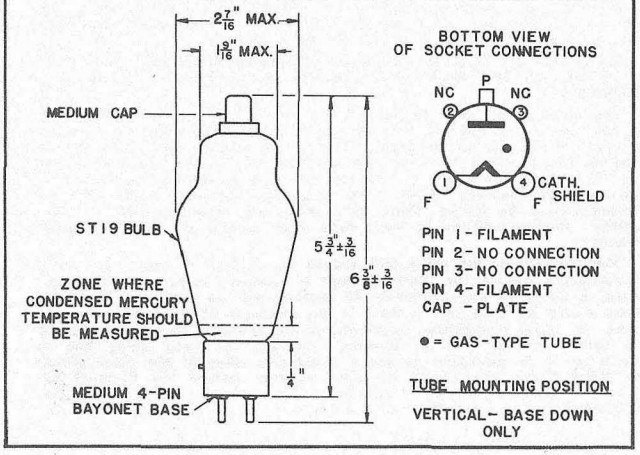
**For use under the conditions of the 10000-volt peak inverse rating. If the 866-A/866 is to be used under frequency and/or temperature conditions such that the peak inverse voltage is limited to 5000 volts, the a-c input voltage and d-c output voltage values in the table should be multiplied by a factor of 0.5 to give new values for the 5000-volt conditions.