JETEC TYPE DESIGNATION REGISTRATION FORM TR TUBES

Date: 3-25-64

JETEC Designation: 8574

Manufacturer: METCOM, INC., Salem, Mass.

General Characteristics

The 8574 is a broad band TR tube designed to effectively decouple the receiver from a common transmitting and receiving antenna during a period of transmission. It's operational band is from 8500 to 9600 megacycles.

Special Feature:

Low Loss, Low Noise, and a long life.

Electrical Data - Typical Values

Operational Band VSWR Max. 1.25	8500 to 9600 Mc/s
Ignitor Ignition Time	1.00 sec.
Ignitor Voltage Drop at Ii=100uAdc	-200 to -400 volts
Spike Leakage Energy at 8900Mc, 200kw, -55 to +85°C	0.30 ergs
Flat Leakage Power at 8900Mc, 20 kw, -55 to +85°C	100 mw
Insertion Loss at 8500 to 9600Mc, Ii=0	0.20 db
Ignitor Interaction at 8500-9600Mc, Ii=100uAdc	0.10 db
Recovery Time at 20 kw peak, 3 db down	3.00 usec
Minimum Breakdown Power at 8900Mc, 0 to +85°C	200 mw
Noise Figure Change at 8900Mc	0.40 db
Life Test at 8900Mc, 20 kw	1000 hours

8574

Mechanical Data - General

Dimensions	See Outline dated 9-16-63
Mounting Position	Any
Mates with	UG-136A/U
Weight, Approximately	3.2 oz.

Absolute Maximum Ratings

Transmitter Peak Power	20 kw
Open Circuit Ignitor Voltage	-700 Vdc
Ignitor Current	100 to 150 uAdc
Ambient Temperature	$-55^{\circ}C$ to $+85^{\circ}C$

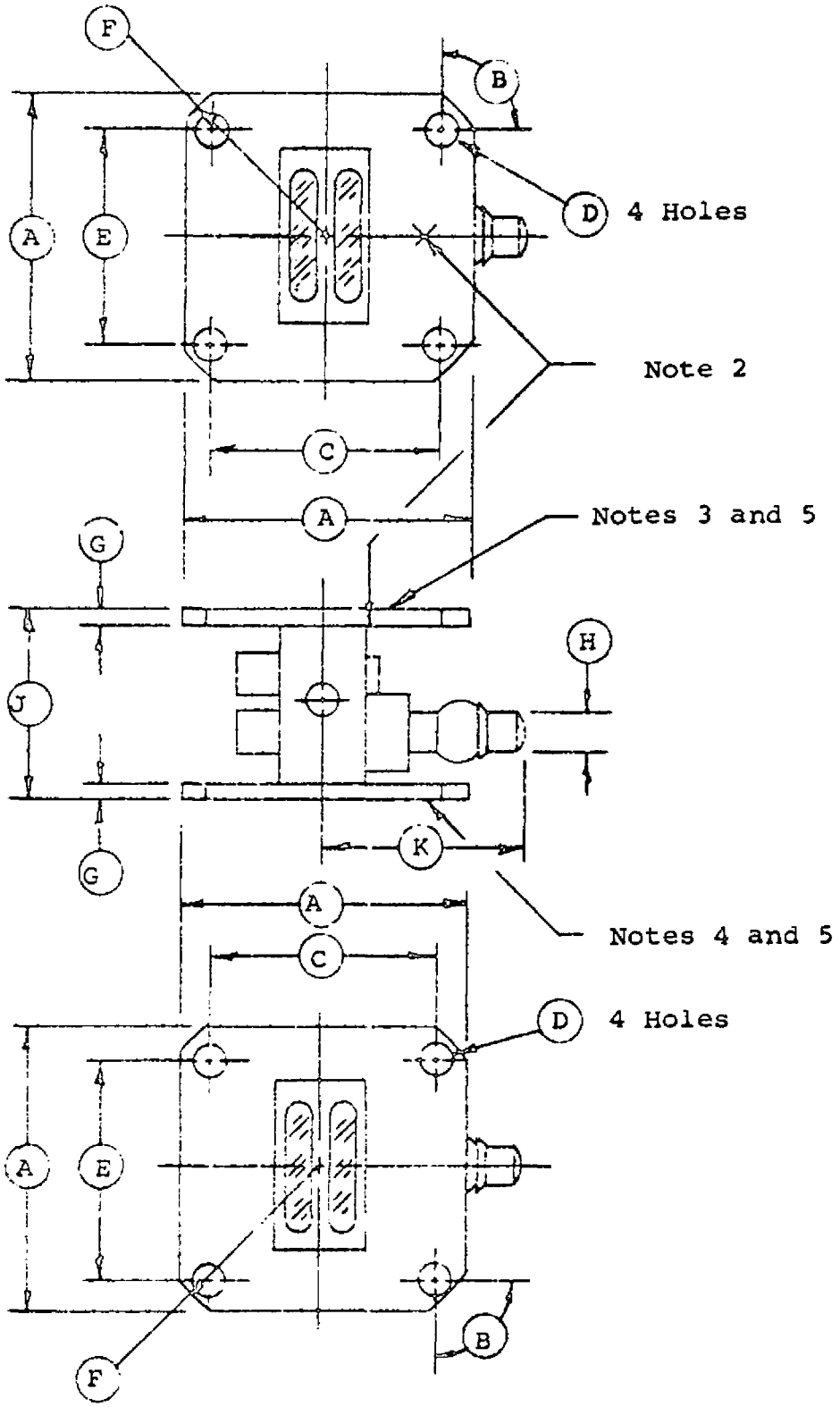

	SPECIFICATION SHEET OUTLINE	METCOM, INC. 76 LAFAYETTE ST. SALEM, MASS.
Page 1 of 2		9-16-63

DIM.	AQL %	INSPECTION LEVEL	LIMITS MIN.	LIMITS MAX.
QUALIFICATION TESTS				
A	---	---	1.57	1.65
F	---	---	1.03R	1.09R
H	---	---	.240 Dia.	.260 Dia.
ACCEPTANCE INSPECTION PART 1				
B	1.0	I	89°30'	90°30'
D			.164	.174
J			1.066	1.074
ACCEPTANCE INSPECTION PART 2				
C	6.5	1.6	1.276	1.284
E			1.216	1.224
G			.146	.156
K			--	1.38

NOTES:

1. Flange to mate with UG136A/2(2 places).

2. Measure temperature at this point.

3. Input Flange.

4. Output Flange.

5. End flanges shall be parallel planes, and shall be flat within 0.006 in the area bounded by the concentric circles of 1.25 and 1.56 diameter. The area outside the ring shall be flat within +.001, -.005 of the area within the ring. The finish on the flanges shall be silver plated, 100 MSI, or equivalent.

6. All dimensions (exceptB) in inches.

7. Exhaust tube shall not extend beyond flange.

TENTATIVE	**SPECIFICATION SHEET**	METCOM, INC. 76 LAFAYETTE ST. SALEM, MASS.
	OUTLINE	
Page 2 of 2		9-16-63