from JEDEC release #4705, May 18, 1964

RCA-8572
VIDICON

Magnetic Focus
Magnetic Deflection

For High-Resolution Film Pickup With
Color or Black-and-White TV Cameras

1"-Diameter
6.25" Length

RCA-8572 is a small vidicon-type camera tube designed especially for film pickup in either color or black-and-white TV cameras. It features separate connections for grid No.4 and grid No.3. The 8572 provides higher resolution, more uniform resolution, and more uniform signal output when operated at high voltage than other similarly-sized vidicons employed in film-pickup service which do not utilize such separate electrode connections.

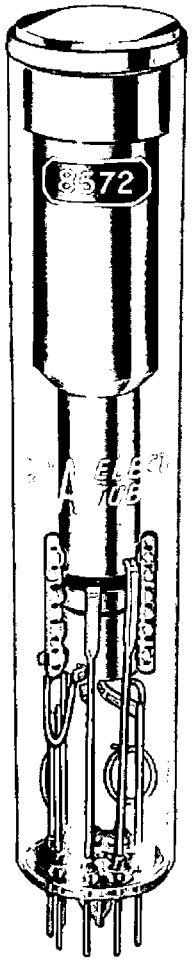

The 8572 may also be used in live-pickup service although higher sensitivity vidicons are usually recommended in such applications.

The 8572 may be operated in a number of voltage modes although recommended operation requires that in each case grid-No.3 voltage is 0.6 of grid-No.4 voltage, and that correct positioning of associated deflecting components is observed. This operating procedure results in increases in both the center resolution and the uniformity of resolution from center to edge of the scanned target area. The resolution capability of the 8572 at the center of the picture is about 1000 TV lines and about 700 TV lines at the corner. This high resolution is obtained when the 8572 is operated with a grid-No.4 voltage of 750 volts and a grid-No.3 voltage of 450 volts. When the 8572 is operated at a lower grid-No.4 voltage of 500 volts and a grid-No.3 voltage of 300 volts, its resolution will be about 900 TV lines at the center and 600 TV lines at the corner of the picture.

The 8572 utilizes a sensitive photoconductive surface of uniform thickness. Because of this uniform thickness, a constant voltage gradient and uniform dark current is obtained across the entire scanned area. The resulting picture background that is produced is free of "flare", and other unwanted signals. The uniform thickness of the photoconductive surface of the 8572 also results in substantially uniform sensitivity over the entire scanned area. Therefore, the 8572 exhibits a degree of uniformity of characteristics from tube to tube that makes it possible to obtain excellent color uniformity and balance when used in vidicon color cameras.

Featured in the design of the 8572 are non-magnetic materials in the front end and an extremely flat faceplate free from optical distortion. The elimination of magnetic materials from the front end and the use of an optically flat faceplate make it easier to register multiple pictures when these tubes are used in vidicon color cameras.

Full advantage of the uniformity of the photoconductive layer in the 8572 is realized only when the associated deflecting and focusing components do not introduce scanning beam-landing errors. If the 8572 is used with components which introduce such errors, compensation may be effected by applying to the cathode, grid No.1, and grid No.2 a modulating voltage of mixed parabolic waveform containing components of both the vertical and horizontal scanning frequencies.

DATA

General:

Heater, for Unipotential Cathode:
- Voltage (AC or DC) . . . . . 6.3 ± 10% volts
- Current at 6.3 volts . . . . . 0.6 amp

Direct Interelectrode Capacitance:[a]
- Target to all other electrodes . . 4.6 pf

Spectral Response. . . . . See *Fig.4*

Photoconductive Layer:
- Maximum useful diagonal of rectangular image (4 x 3 aspect ratio). . . . . 0.62 inch
- Orientation of quality rectangle—Proper orientation is obtained when the horizontal scan is essentially parallel to the straight sides of the masked portions of the faceplate. The straight sides are parallel to the plane passing through the tube axis and short index pin. The masking is for orientation only and does not define the proper scanned area of the photoconductive layer.

Focusing Method. . . . . .Magnetic
Deflection Method. . . . . .Magnetic
Overall Length . . . . . 6.250" ± 0.125"
Greatest Diameter. . . . . 1.125" ± 0.010"
Bulb T8
Base . . Small-Button Ditetrar 8-Pin, (JEDEC No.E8-11)
Socket . . . . . Cinch[b] No.54A18088, or equivalent

Focusing Coil. . Cleveland Electronics[cd]	No. VF-115-12, or equivalent
Deflecting Yoke. .Cleveland Electronics[cd]	No. VY-111-3, or equivalent
Alignment Coil . . .Cleveland Electronics[cd]	No. VA-118, or equivalent
Operating Position	Any
Weight (Approx.)	2 oz

Maximum Ratings, *Absolute-Maximum Values:*[e]

For scanned area of 1/2" x 3/8"

Grid-No.4 Voltage.	1000 max.	volts
Grid-No.3 Voltage.	1000 max.	volts
Grid-No.2 Voltage.	750 max.	volts
Grid-No.1 Voltage:		
Negative bias value.	300 max.	volts
Positive bias value.	0 max.	volts
Peak Heater-Cathode Voltage:		
Heater negative with respect to cathode	125 max.	volts
Heater positive with respect to cathode	10 max.	volts
Target Voltage	125 max.	volts
Dark Current	0.25 max.	μa
Peak Target Current[f]	0.55 max.	μa
Faceplate:		
Illumination	1000 max.	fc
Temperature.	71 max.	°C

Typical Operation and Performance Data:

For scanned area of 1/2" x 3/8" — Faceplate temperature of 30° to 35° C	*Low-Voltage Operation*	*High-Voltage Operation*	
Grid-No.4 (Decelerator) Voltage.	500	750	volts
Grid-No.3 (Beam-Focus Electrode) Voltage[g]. .	300[h]	450[h]	volts
Grid-No.2 (Accelerator) Voltage.	300	300	volts
Grid-No.1 Voltage for Picture Cutoff[j]. . . .	-45 to -100	-45 to -100	volts
Average "Gamma" of Transfer Characteristic for signal-output current between 0.02 μa and 0.2 μa	0.65	0.65	
Visual Equivalent Signal-to-Noise Ratio (Approx.)[k]	300:1	300:1	
Lag—Per Cent of Initial Value of Signal-Output Current 1/20 Second After Illumination is Removed:[m]			
Typical value for minimum lag operation.	7.5	7.5	%
Minimum Peak-to-Peak Blanking Voltage:			
When applied to grid No.1.	75	75	volts
When applied to cathode.	20	20	volts
Limiting Resolution:			
At center of picture .	900	1000	TV lines
At corner of picture .	600	700	TV lines
Amplitude Response to a 400 TV Line Square-Wave Test Pattern at Center of Picture. . .	35	45	%
Field Strength at Center of Focusing Coil[g]. . .	41 ± 4	52 ± 4	gauss
Peak Deflecting-Coil Current:			
Horizontal	180	220	ma
Vertical	33	40	ma
Field Strength of Adjustable Alignment Coil[n].	0 to 4	0 to 4	gauss

Average-Sensitivity Operation (Live-Scene Pickup)
10 Footcandles on Faceplate

Faceplate Illumination (Highlight).	10	fc
Target Voltage[pq]	25 to 60	volts
Dark Current[r].	0.02	μa
Signal-Output Current:[s]		
Typical.	0.3	μa

Minimum-Lag Operation (Film Pickup)
100 Footcandles on Faceplate

Faceplate Illumination (Highlight).	100	fc
Target Voltage[pq]	12 to 30	volts
Dark Current[r].	0.004	μa
Signal-Output Current:[s]		
Typical.	0.3	μa

---

[a] This capacitance, which effectively is the output impedance of the 8572, is increased when the tube is mounted in the deflecting-yoke and focusing-coil assembly. The resistive component of the output impedance is in the order of 100 megohms.

[b] Made by Cinch Manufacturing Corporation, 1026 S. Homan Avenue, Chicago 24, Illinois.

[c] Made by Cleveland Electronics Inc., 1974 East 61st Street, Cleveland, Ohio.

[d] These components are chosen to provide tube operation with minimum beam-landing error when mounted in the recommended position along the tube axis as shown in Fig.1.

[e] The *maximum ratings* in the tabulated data are established in accordance with the following definition of the *Absolute-Maximum Rating System* for rating electron devices. Absolute-Maximum ratings are limiting values of operating and environmental conditions applicable to any electron device of a specified type as defined by its published data, and should not be exceeded under the worst probable conditions.

The device manufacturer chooses these values to provide acceptable serviceability of the device, taking no responsibility for equipment variations, environment variations, and the effects of changes in operating conditions due to variations in device characteristics.

The equipment manufacturer should design so that initially and throughout life no Absolute Maximum value for the intended service is exceeded with any device under the worst probable operating conditions with respect to supply voltage variation, equipment component variation, equipment control adjustment, load variation, signal variation, environmental conditions, and variations in device characteristics.

[f] Video amplifiers must be designed properly to handle target currents of this magnitude to avoid amplifier overload or picture distortion.

[g] Beam focus is usually attained by varying the focus-coil current to obtain a field-strength value within the range shown under *Typical Operation and Performance Data.* If the field strength of the focus coil is fixed, beam focus is obtained within a ± 10 per cent range of the grid-No.4 and grid-No.3 voltages. However, the recommended ratio of 0.6 between grid No.3 and grid No.4 must be maintained as these voltages are varied.

[h] In general, grid No.3 should be operated above 250 volts and be 0.6 of grid-No.4 voltage.

[j] With no blanking voltage on grid No.1

[k] Measured with high-gain, low-noise, cascode-input-type amplifier having bandwidth of 5 Mc and a peak signal-output current of 0.35 microampere. Because the noise in such a system is predominately of the high-frequency type, the visual equivalent signal-to-noise ratio is taken as the ratio of the highlight video-signal current to rms noise current, multiplied by a factor of 3.

[m] For initial signal-output current of 0.3 microampere and a dark current of 0.004 microampere.

[n] The alignment coil should be located on the tube so that its center is at a distance of 3-11/16 inches from the face of the tube, and be positioned so that its axis is coincident with the axis of the tube, the deflecting yoke, and the focusing coil.

[p] The target voltage for each 8572 must be adjusted to that value which gives the desired operating dark current.

[q] Indicated range for each type of service serves only to illustrate the operating target-voltage range normally encountered.

[r] The deflecting circuits must provide extremely linear scanning for good black-level reproduction. Dark-current signal is proportional to the scanning velocity. Any change in scanning velocity produces a black-level error in direct proportion to the change in scanning velocity.

[s] Defined as the component of the highlight target current after the dark-current component has been subtracted.

OPERATING CONSIDERATIONS

The *target connection* is made by a suitable spring contact bearing against the edge of the metal ring at the face end of the tube. This spring contact may conveniently be provided as part of the focusing-coil design.

The *deflecting yoke and focusing coil* used with the 8572 are designed to cause the scanning beam to land perpendicularly to the target at all points of the scanned area with minimum beam-landing error and resultant superior uniformity of sensitivity and focus over the scanned area. The recommended location of these components is shown in Fig.1.

COMPONENT LOCATIONS

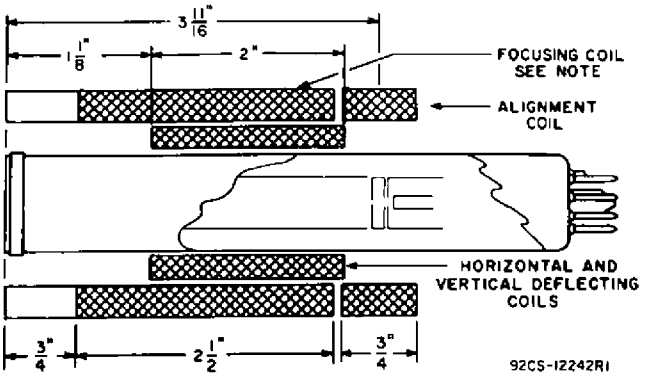

NOTE: CROSS-HATCHING INDICATES WOUND PORTION OF FOCUSING COIL.

Recommended Location and Length of Deflecting, Focusing, and Alignment Components to obtain Minimum Beam-Landing Error.

Fig.1

The polarity of the focusing coil should be such that a north-seeking pole is attracted to the image end of the focusing coil, with the indicator located outside of and at the image end of the focusing coil.

The *temperature of the faceplate* should not exceed 71° C (160° F), either during operation or storage of the 8572. Operation with a faceplate temperature in the range from about 25° to 35° C (77° to 95° F) is recommended. The temperature of the faceplate is determined by the combined heating effects of the incident illumination on the faceplate, the associated components, and the tube itself. To reduce these heating effects and permit operation in the preferred temperature range under conditions of extremely high light levels, the use of an infrared filter between the object and the camera lens as well as a blast of cooling air directed across the faceplate from a blower is recommended.

Provisions should also be made in the camera installation to hold the faceplate temperature of the 8572 at a *steady value* within the recommended range. Dark current increases with increasing temperature. It is highly desirable to operate the 8572 at a steady temperature to maintain dark current at a preselected value. This mode of operation ensures both optimum and stable day-to-day performance. If such provisions cannot be made, changes in target voltage may be required from time to time to maintain the desired picture quality.

As *target voltage* is increased, dark current also increases. The range of target voltage for various dark current levels of different 8572's is shown in Fig.2. It should be noted that the range of target voltage to produce a given dark current, and therefore a given sensitivity, is very narrow for the 8572. Individual 8572's will therefore *have substantially identical performance characteristics when operated with an identical value of dark current.* For proper adjustment of the target voltage on each 8572 see SET-UP PROCEDURE on pages 6 and 7.

RANGE OF DARK CURRENT

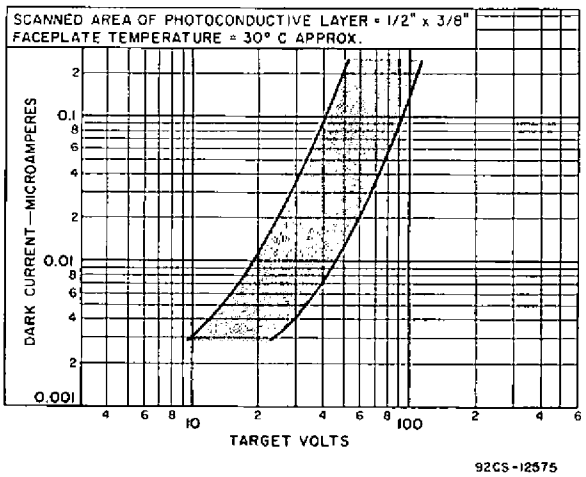

Fig.2

Persistence or lag of the photoconductive layer is given in Fig.3 for three values of dark current. Each curve shows the decay in signal-output current from an initial value of 0.3 microampere after the illumination is cut off.

TYPICAL PERSISTENCE CHARACTERISTICS

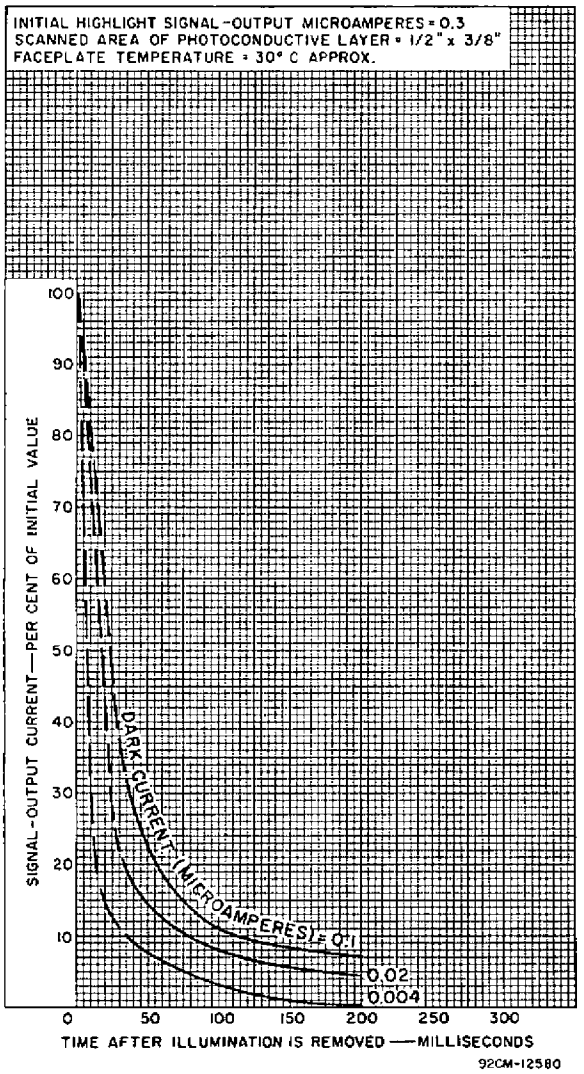

Fig.3

TYPICAL SPECTRAL SENSITIVITY CHARACTERISTIC

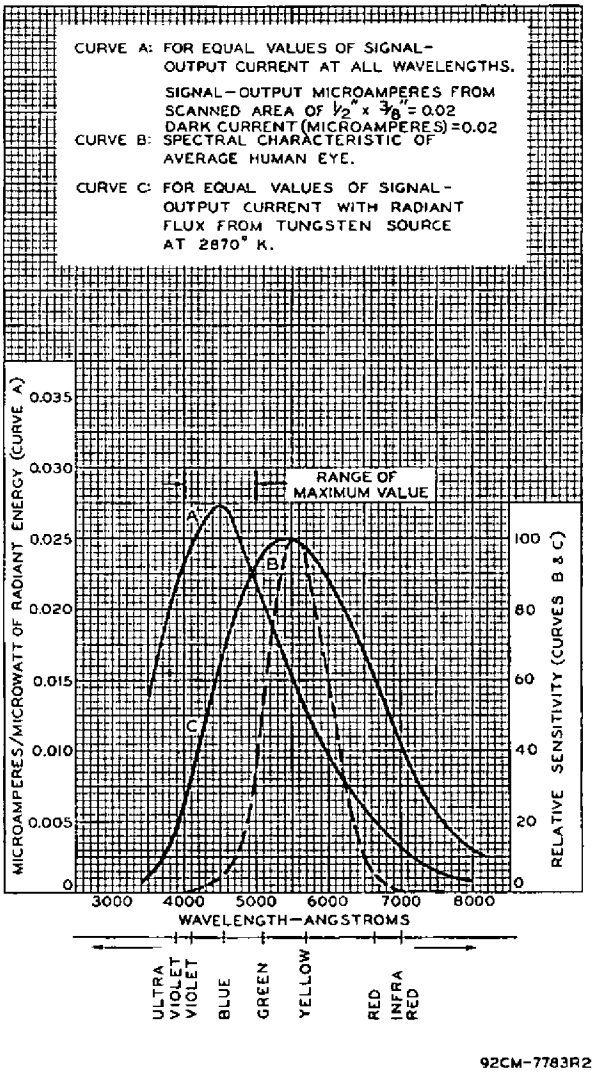

Fig.4

The *spectral response* of the 8572 is shown in Fig.4.

As shown in Fig.5, a substantial increase in both limiting resolution and amplitude response of the 8572 may be obtained by increasing the operating voltages on grid No.4 and grid No.3. The focusing-coil field strength must be increased and more deflecting power is required at higher electrode voltages as indicated under *Typical Operation and Performance Data*. Very little additional beam-landing error is introduced at the higher voltages provided the recommended operating voltages are used and the associated components are positioned as shown in Fig.1.

When the 8572 is used with illumination levels of 10 footcandles on the faceplate, a dark current of 0.02 microampere or less is usually required. This value will be obtained for a target voltage within the range of 25 to 60 volts.

For film pickup where illumination on the faceplate will usually exceed 50 footcandles, a target voltage within the range of 12 to 30 volts will normally be employed for low dark current and maximum signal uniformity.

The exact value of target voltage to give the required dark current will depend on the individual tube and on the temperature at which its faceplate is operated. It is important that the tube be allowed to reach a stable operating

temperature before the operating dark current is determined; otherwise the dark current will change as the temperature of the tube changes.

Signal Output and Light Transfer Characteristics. Typical signal output as a function of

UNCOMPENSATED HORIZONTAL SQUARE-WAVE RESPONSE

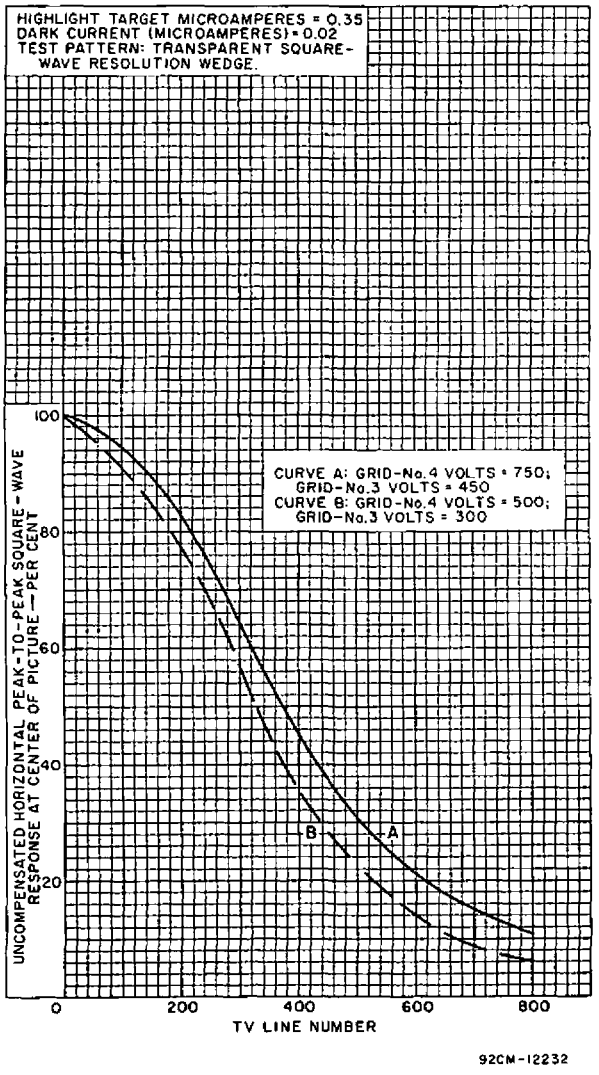

Fig.5

uniform 2870° K tungsten illumination on the photoconductive layer for different values of dark current is shown in Fig.6. It is to be noted that these curves are for a typical 8572 under the conditions indicated. However, the target voltage needed to give average sensitivity operation at a particular dark current may vary over the given range. It is therefore essential that the proper operating target voltage be determined for each 8572. From these curves, it will also be noted that the illumination must be increased about 50 times to produce an increase of 10 times in signal-output current for any given value of dark current.

The average "gamma", or slope, of the light transfer characteristic curves shown in Fig.6 is approximately 0.65. This value is relatively constant over an adjustment range of 4 to 1 in target voltage, or 50 to 1 in dark current, for a signal-output current range between 0.01 and 0.3 microampere. Close uniformity in the value of gamma between individual 8572's is maintained to insure satisfactory operation of color cameras in which the signal-output currents of the 8572's must match closely over a wide range of scene illumination. Because its transfer characteristic is approximately the complement of the transfer characteristic of a picture tube, the 8572 can produce a picture having proper tone rendition.

LIGHT TRANSFER CHARACTERISTICS

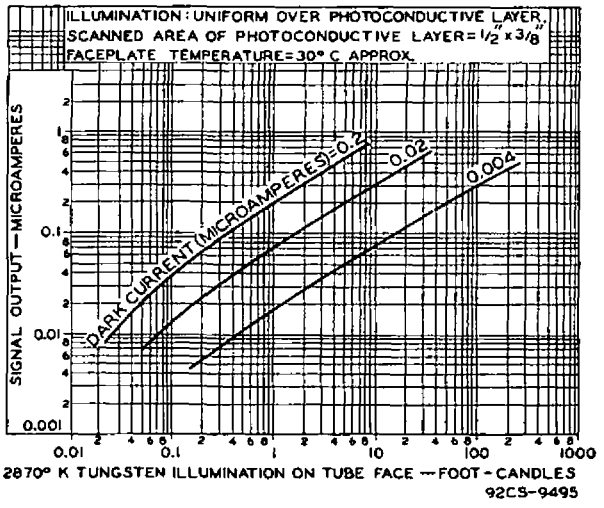

Fig.6

Because uniformity of sensitivity of the photoconductive layer in the 8572 is excellent, uniform signal output over the scanned area can be obtained if the 8572 is operated with a deflecting-yoke and focusing-coil system designed so that no beam-landing errors are produced in the vidicon. If the 8572 is to be utilized with designs of focusing and deflecting systems which introduce such errors, uniform sensitivity over the scanned area of the 8572 can be achieved by compensating for the beam-landing errors thus introduced. Without compensation for these errors, variations in sensitivity over the scanned area will occur. These variations resulting from beam-landing errors are in the form of lower signal from the edges of the scanned area than from the center. However, because of the uniformity of the photoconductive layer, these variations in sensitivity are the same from tube to tube. Compensation for the beam-landing errors to achieve uniform sensitivity can be obtained by supplying a modulating voltage of a suitable waveform to the cathode of the 8572. The desired waveform is parabolic in shape and of such a polarity that the cathode voltage is lowered as the beam approaches the edges

of the scanned area. The modulating waveform should contain parabolic components of both the horizontal and vertical scanning frequencies. The horizontal component should have the greater amplitude and will be the most effective in obtaining uniform sensitivity.

TYPICAL CHARACTERISTIC

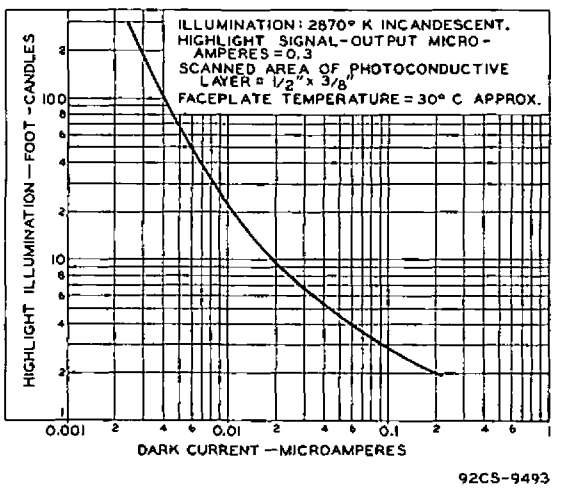

Fig.7

A satisfactory value of this mixed parabolic waveform signal for compensation of beam-landing errors is approximately 4 volts peak-to-peak. This modulating voltage is applied to grid No.1 and grid No.2 as well as to the cathode to prevent modulation of the scanning beam.

Full-size scanning of the 1/2" x 3/8" area of the photoconductive layer should always be used. This condition can be assured by first adjusting the deflection circuits to overscan the photoconductive layer sufficiently so that the edges of the sensitive area can be seen on the monitor. Then, after centering the image on the sensitive area (see Fig.8), reduce scanning until the edges of the image just disappear. In this way, the maximum signal-to-noise ratio and maximum resolution can be obtained. It should be noted that overscanning the photoconductive layer produces a smaller-than-normal picture on the monitor.

Underscanning of the photoconductive layer, i.e., scanning an area of the layer less than 1/2" x 3/8", should never be permitted. This condition which produces a larger-than-normal picture on the monitor, not only causes sacrifice in signal-to-noise ratio and resolution, but also may cause permanent change in sensitivity and dark current of the underscanned area. An underscanned area showing such a change will be visible in the picture when full-size scanning is restored.

Failure of scanning even for a few seconds may permanently damage the photoconductive layer. The damaged area shows up as a spot or line in the picture during subsequent operation. To avoid damaging the 8572 during scanning failure, it is necessary to prevent the scanning beam from reaching the layer.

SET-UP PROCEDURE

The *sequence of adjustments* in operating the 8572 is as follows: With the Grid-No.1 Voltage Control set for maximum negative bias (beam cutoff), Target Voltage Control set for the minimum voltage shown under *Typical Operation*, and Deflection Controls set for maximum overscan, apply other voltages to the 8572 as indicated under *Typical Operation*.

Next, with a 1/2" x 3/8" mask centered on the face of the tube, and with the iris set for minimum opening, decrease the grid-No.1 bias to just bring out the highlight details of the picture on the monitor. Adjust the Beam-Focus Voltage Control, the lens stop, and the optical focus to obtain the best picture. Reduce horizontal and vertical scanning so that the edges of the image extend just outside the scanned area on the monitor. Then adjust the alignment field so that the center of the picture does not move as the beam-focus voltage is varied. Some readjustment of horizontal and vertical centering may be necessary after alignment.

Next, open the lens and adjust the aperture to give a peak signal-output current of 0.2 to 0.3 microampere. A good procedure for doing this is to focus the camera on a uniform white area having the same brightness as the highlights in the scene to be televised. The image of this

PROPER POSITIONING OF IMAGE ON THE FACE OF THE VIDICON

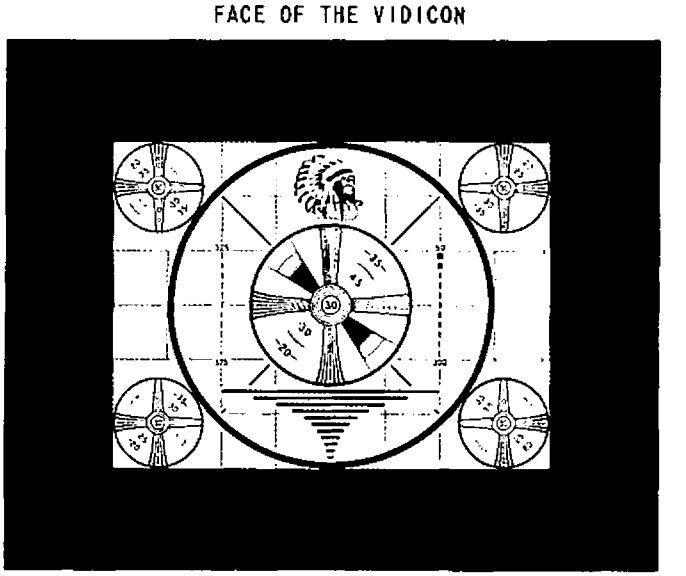

Fig.8

white area must at least cover the scanned area of the tube face. The current read on the microammeter will be the dark current plus the peak signal-output current, i.e., highlight target current.

A waveform-oscilloscope monitor can be used to compare the peak signal-output current produced by any scene to the peak value measured with the microammeter when the camera is focused on a uniformly bright scene. When a camera is adjusted in this manner, video gain should be kept constant and the light level on the tube face should be controlled to maintain the constant predetermined value of peak signal as observed on the oscilloscope.

After adjusting the light level to obtain the correct signal-output current, the grid-No.1-bias voltage should be adjusted to just discharge the highlights. Too much current will result in poor resolution and poor picture quality. After the grid-No.1 bias is properly adjusted, it will be necessary to check and readjust the dark current and the peak signal-output current.

Proper adjustment of the dark current, the peak signal-output current, and the grid-No.1 bias, will result in a picture of good quality with minimum smearing of moving objects.

For average-sensitivity operation of the 8572 the target voltage should be adjusted to produce a dark current of 0.02 microampere.

For film-pickup operation of the 8572 the target voltage should be adjusted to produce a dark current of 0.004 microampere and the peak signal-output current should be adjusted to the desired value by controlling the light level on the faceplate of the tube.

In setting up 8572's in a color camera, particular attention must be given to proper alignment, best obtainable focus, and identical centering of scanned areas on the photoconductive layers. For best color balance and color tracking over a wide range of light levels, the light level in each color channel should be controlled so that each of the 8572's develops the same value of peak signal output for white portions of a scene. Observation of these operating conditions will assure good registration and good color balance.

REFERENCES

Otto H. Schade, *"Electro-Optical Characteristics of Television System; Introduction and*

"Part I — Characteristics of Vision and Visual Systems", RCA Review, March, 1948;

"Part II — Electro-Optical Specifications for Television Systems", RCA Review, June, 1948;

"Part III — Electro-Optical Characteristics of Camera Systems", RCA Review, September, 1948;

"Part IV — Correlation and Evaluation of Electro-Optical Characteristics of Imaging Systems", RCA Review, December, 1948.

R.G. Neuhauser, *"Vidicon for Film Pickup"*, Jour. of S.M.P.T.E., Vol.62, No.2, February, 1954.

H.N. Kozanowski, *"Vidicon Film-Reproduction Cameras"*, Jour. of S.M.P.T.E., Vol.62, No.2 February, 1954.

R.G. Neuhauser and L.D. Miller, *"Beam-Landing Errors and Signal-Output Uniformity of Vidicons"*, Jour. of S.M.P.T.E., Vol.67, March, 1958.

L.D. Miller and B.H. Vine, *"An Improved Developmental One-Inch Vidicon for Television Cameras"*, Jour. of S.M.P.T.E., Vol.67, March, 1958.

J. Castleberry and B.H. Vine, *"An Improved Vidicon Focusing-Deflecting Unit"*, Jour. of S.M.P.T.E., Vol.68, April, 1959.

R.G. Neuhauser, *"Sensitivity & Motion Capturing Ability of Television Camera Tubes"*, Jour. of S.M.P.T.E., Vol.68, No.7, July, 1959.

Information furnished by RCA is believed to be accurate and reliable. However, no responsibility is assumed by RCA for its use; nor for any infringements of patents or other rights of third parties which may result from its use. No license is granted by implication or otherwise under any patent or patent rights of RCA.

DIMENSIONAL OUTLINE

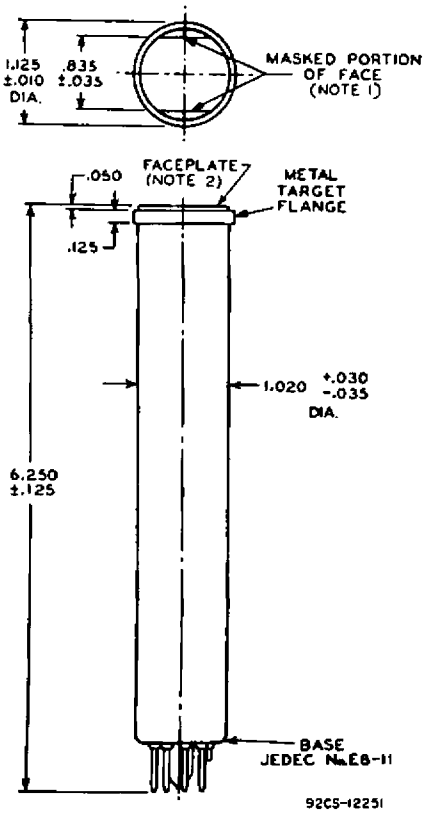

NOTE 1: STRAIGHT SIDES OF MASKED PORTIONS ARE PARALLEL TO THE PLANE PASSING THROUGH TUBE AXIS AND SHORT INDEX PIN.

NOTE 2: FACEPLATE THICKNESS IS 0.094" ± 0.012".

BASING DIAGRAM

Bottom View

Pin 1 – Heater
Pin 2 – Grid No.1
Pin 3 – Grid No.4
Pin 4 – Internal Connection— Do Not Use
Pin 5 – Grid No.2

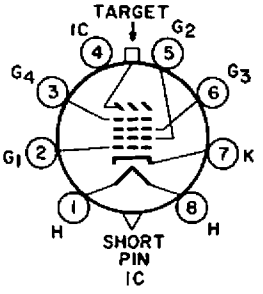

DIRECTION OF LIGHT:
INTO FACE END OF TUBE

Pin 6 – Grid No.3
Pin 7 – Cathode
Pin 8 – Heater
Flange – Target
Short Index Pin – Internal Connection— Make No Connection

8ME