from JEDEC release #4704A, Aug. 5, 1968

EIMAC
Division of Varian
SAN CARLOS
CALIFORNIA

8561
4CX300Y
CERAMIC POWER TETRODE

The EIMAC 4CX300Y is a compact integral-finned external-anode power tetrode having a maximum plate-dissipation rating of 400 watts. The 4CX300Y may be operated at maximum ratings to 110 MHz.

The all-ceramic-and-metal construction and the internally-unitized electrode structure combine to make the 4CX300Y especially durable and free from mechanically-induced noise under conditions of severe acceleration caused by shock or vibration.

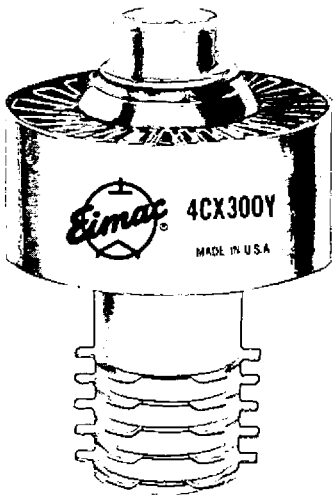

GENERAL CHARACTERISTICS

ELECTRICAL

	Min.	Nom.	Max.	
Cathode: Oxide-Coated, Unipotential				
Heating Time	30	60		seconds
Cathode-to-Heater Potential			±150	volts
Heater: Voltage (See "Application")		6.0		volts
Current (E_f=6.0 volts)	3.0		3.85	amperes
Amplification Factor (Grid to Screen)	4.0		5.6	
Transconductance (I_b=200 ma.)		12,000		μmhos

	Min.	Nom.	Max.	
Direct Interelectrode Capacitances, Grounded Cathode:				
Input	30		38	μμf
Output	3.9		5.0	μμf
Feedback			0.07	μμf
Direct Interelectrode Capacitances, Grounded Grid and Screen:				
Input		18		μμf
Output	3.9		5.0	μμf
Feedback		0.01		μμf
Frequency for Maximum Ratings			110	MHz

MECHANICAL

Base	Special, breechblock terminal surfaces
Recommended Socket	EIMAC SK-700 Series
Operating Position	Any
Maximum Operating Temperatures:	
Ceramic-to-Metal Seals	250°C
Anode Core	250°C
Cooling	Forced Air
Maximum Over-All Dimensions:	
Height	2.5 inches
Diameter	1.65 inches
Net Weight	4 ounces
Shipping Weight (Approximate)	1 pound

(Revised 6-15-66) © 1962, 1966 Varian

Printed in U.S.A.

RADIO-FREQUENCY POWER AMPLIFIER OR OSCILLATOR

Class-C Telegraphy or FM Telephony
(Key-down conditions)

MAXIMUM RATINGS

DC PLATE VOLTAGE	2000 VOLTS
DC SCREEN VOLTAGE	300 VOLTS
DC GRID VOLTAGE	—250 VOLTS
DC PLATE CURRENT	400 MA
PLATE DISSIPATION	400 WATTS
SCREEN DISSIPATION	8 WATTS
GRID DISSIPATION	1 WATT

TYPICAL OPERATION

DC Plate Voltage	1000	1500	2000	volts
DC Screen Voltage	250	250	250	volts
DC Grid Voltage	—90	—90	—90	volts
DC Plate Current	0.38	0.4	0.4	amps
DC Screen Current*	31	26	26	mA
DC Grid Current*	32	33	33	mA
Peak RF Grid Voltage*	110	110	110	volts
Driving Power*	3.5	3.8	3.8	watts
Plate Input Power	380	600	800	watts
Plate Output Power	240	425	600	watts

*Approximate values

AUDIO-FREQUENCY AMPLIFIER OR MODULATOR

Class-AB_1

MAXIMUM RATINGS (per tube)

DC PLATE VOLTAGE	2000 VOLTS
DC SCREEN VOLTAGE	400 VOLTS
DC PLATE CURRENT	400 MA
PLATE DISSIPATION	400 WATTS
SCREEN DISSIPATION	8 WATTS
GRID DISSIPATION	1 WATT

TYPICAL OPERATION (Sinusoidal wave, two tubes unless noted)

DC Plate Voltage	1000	1500	2000	volts
DC Screen Voltage	400	400	400	volts
DC Grid Voltage[1]	—60	—70	—70	volts
Zero-Signal DC Plate Current	400	200	200	mA
Max-Signal DC Plate Current	800	790	750	mA
Max-Signal DC Screen Current	24	16	4	mA
Effective Load, Plate to Plate	2060	3000	5100	ohms
Peak AF Grid Input Voltage (per tube)*	55	65	60	volts
Driving Power	0	0	0	watts
Max-Signal Plate Output Power	340	800	890	watts

*Approximate values
[1]Adjust grid bias to obtain listed zero-signal plate current.

RADIO-FREQUENCY LINEAR AMPLIFIER

Class-AB_1 (Carrier conditions)

MAXIMUM RATINGS

DC PLATE VOLTAGE	2000 VOLTS
DC SCREEN VOLTAGE	400 VOLTS
DC PLATE CURRENT	400 MA
PLATE DISSIPATION	400 WATTS
SCREEN DISSIPATION	8 WATTS
GRID DISSIPATION	1 WATT

TYPICAL OPERATION

DC Plate Voltage	1000	1500	2000	volts
DC Screen Voltage	400	400	400	volts
DC Grid Voltage[1]	—60	—70	—70	volts
Zero-Signal DC Plate Current	200	100	100	mA
DC Plate Current	280	210	205	mA
DC Screen Current*	—5	—5	—5	mA
Peak RF Grid Voltage*	28	33	30	volts
Plate Output Power	52	110	115	watts

*Approximate values.
[1]Adjust grid bias to obtain listed zero-signal plate current.

RADIO-FREQUENCY LINEAR AMPLIFIER

Class-AB_1 (Single-Sideband Suppressed-Carrier Operation)

MAXIMUM RATINGS

DC PLATE VOLTAGE	2000 VOLTS
DC SCREEN VOLTAGE	400 VOLTS
DC PLATE CURRENT	400 MA
PLATE DISSIPATION	400 WATTS
SCREEN DISSIPATION	8 WATTS
GRID DISSIPATION	1 WATT

TYPICAL OPERATION (Peak-envelope conditions except where noted)

DC Plate Voltage	1000	1500	2000	volts
DC Screen Voltage	400	400	400	volts
DC Grid Voltage[1]	—60	—70	—70	volts
Zero-Signal DC Plate Current	200	100	100	mA
Peak RF Grid Voltage*	55	65	60	volts
DC Plate Current	400	395	375	mA
DC Screen Current*	12	8	2	mA
Plate Input Power	400	590	750	watts
Plate Output Power	170	400	415	watts
Two-Tone Average DC Plate Current				
Two-Tone Average DC Screen Current				

*Approximate values.
[1]Adjust grid bias to obtain listed zero-signal plate current.

PLATE-MODULATED RADIO-FREQUENCY AMPLIFIER

Class-C Telephony (Carrier conditions)

MAXIMUM RATINGS

DC PLATE VOLTAGE	1500 VOLTS
DC SCREEN VOLTAGE	300 VOLTS
DC GRID VOLTAGE	—250 VOLTS
DC PLATE CURRENT	300 MA
PLATE DISSIPATION	250 WATTS
SCREEN DISSIPATION	8 WATTS
GRID DISSIPATION	1 WATT

TYPICAL OPERATION

DC Plate Voltage	1000	1500	volts
DC Screen Voltage	250	250	volts
DC Grid Voltage	—130	—130	volts
DC Plate Current	285	300	mA
DC Screen Current*	24	18	mA
DC Grid Current*	17	17	mA
Peak RF Grid Input Voltage*	148	148	volts
Driving Power*	1.7	1.7	watts
Plate Input Power	285	500	watts
Plate Output Power	165	300	watts

*Approximate values.

NOTE: "TYPICAL OPERATION" data are obtained by calculation from published characteristic curves. No allowance has been made for circuit losses. Adjustment of the rf grid drive to obtain the specified plate current at the specified grid bias, screen voltage, and plate voltage is assumed. If this procedure is followed, there will be little variation in output power when tubes are changed, even though there may be some variation in grid and screen currents. The grid and screen currents which result when the desired plate current is obtained are incidental and vary from tube to tube. These current variations cause no difficulty so long as the circuit maintains the correct voltage in the presence of the variations in current. If grid bias is obtained principally by means of a grid resistor, the resistor must be adjustable to obtain the required bias voltage when the correct rf driving voltage is applied.

APPLICATION

MECHANICAL

Mounting — The 4CX300Y may be operated in any position. Recommended sockets for the 4CX300Y are the EIMAC Air-System Sockets type SK-700 (ungrounded cathode) or type SK-710 (cathode and one heater contact grounded). Both sockets provide connections to all electrodes except the anode and each incorporates a screen by-pass capacitor of approximately 1100 $\mu\mu$f. The SK-606 chimney is recommended for use with the SK-700 and SK-710 sockets.

Other sockets suitable for use with the 4CX300Y include the SK-740, SK-760, and SK-770. These sockets do not incorporate screen by-pass capacitors. The SK-760 and SK-770 incorporate integral air chimneys. Screen contacts are connected to the mounting flange in the SK-770 and are, therefore, grounded when the socket is installed in the usual manner.

Cooling — The maximum rated ceramic-to-metal seal temperature for the 4CX300Y is 250°C. Adequate forced-air cooling must be provided to assure that this maximum temperature rating is not exceeded. Air-flow requirements to maintain seal temperatures at 200°C in 50°C ambient air are tabulated below.

Plate Dissipation (Watts)	SEA LEVEL		10,000 FEET	
	Air Flow (CFM)	Pressure Drop (Inches of Water)	Air Flow (CFM)	Pressure Drop (Inches of Water)
100	2.2	0.065	3.2	0.095
150	3.4	0.14	4.9	0.21
200	4.6	0.26	6.7	0.37
250	5.9	0.40	8.6	0.58
300	7.2	0.58	10.5	0.85
350	8.7	0.82	12.7	1.2
400	10.3	1.12	15.0	1.6

A new, more efficient cooling fin design is incorporated in the 4CX300Y which results in lower air-flow requirements. This is reflected in the table above (which assumes the use of an EIMAC SK-700 or SK-710 socket and SK-606 chimney).

At high altitudes and high ambient temperatures the flow rate must be increased to obtain equivalent cooling. The flow rate and corresponding pressure differential must be determined individually in such cases, using the maximum rated temperature as the criterion for satisfactory cooling.

Cooling effectiveness should also be determined on an individual basis if the 4CX300Y is operated immersed in an insulating fluid such as silicone oil, again using the maximum rated temperature as the criterion.

ELECTRICAL

Heater Operation — The rated heater voltage for the 4CX300Y is 6.0 volts.

The heater voltage must be maintained within ±5% of the selected operating voltage if variations in circuit performance are to be minimized and best tube life obtained.

Cathode Operation — The 4CX300Y employs a cylindrical indirectly-heated oxide-coated unipotential cathode. The minimum warm-up time is 30 seconds when rated heater voltage is applied.

Grid Operation — The 4CX300Y control grid has a maximum dissipation rating of 1.0 watt, and precautions should be observed to avoid exceeding this rating. The grid bias and driving power should be kept near the values shown in the Typical Operation sections of the data sheet whenever possible.

In class-A and class AB_1 amplifiers, where no grid current flows, the grid bias voltage may be applied through a resistor. The maximum permissible series resistance per tube is 100,000 ohms.

Screen Operation — The maximum rated screen dissipation for the 4CX300Y is 8 watts. The maximum rated dc screen supply voltage is 300 volts when the tube is operated in class-C amplifier or oscillator service, and 400 volts when the tube is operated in class-AB_1 or class-B amplifier service.

Under certain operating conditions the screen current of a tetrode may reverse. This makes it dangerous to rely on a screen-dropping resistor or a series regulator to supply the screen voltage unless a bleeder or regulator tube is connected from screen to cathode. This bleeder should draw at least 15 milliamperes for each tube connected to the screen supply.

The power input to the screen can be calculated from the voltage and current whenever the screen-to-cathode potential does not vary. Screen modulation or cathode driving of tetrode amplifiers can lead to errors in measurement of screen input when the effective voltage and current exceed the indicated dc values. When there is reason to suspect that the screen input exceeds the indicated power, it is advisable to maintain the indicated screen power input below approximately 75% of the rated screen dissipation.

A screen by-pass capacitor of approximately 1100 $\mu\mu$f is incorporated in the body of the EIMAC SK-700 and SK-710 Air-System Sockets and is adequate for normal amplifier operation at high and ultra-high radio frequencies. Operation at low radio frequencies or audio frequencies may require that additional capacitance be connected externally. In the latter case, the screen by-pass capacitance within the socket helps to eliminate the high-frequency parasitic oscillations occasionally encountered in tetrode amplifiers.

The self-neutralizing frequency of the 4CX300Y is above the useful high-frequency limit for the tube when either of the sockets with integral screen by-pass capacitors is used.

Plate Operation—The 4CX300Y has a finned external anode for forced-air cooling. Connection to the anode may be made at the top cap or cylindrical cooler shell. The latter is usually used

when the tube is installed in coaxial lines or cavities.

The absolute maximum plate-dissipation rating for the 4CX300Y is 400 watts, which is also the rated maximum dissipation for class-C amplifier or oscillator applications and for class-B or class-AB_1 amplifier applications. When the 4CX300Y is used in plate-modulated amplifier applications, the plate-dissipation rating is 250 watts under carrier conditions, rising to 400 watts under 100% sine-wave modulation. Plate dissipation may be permitted to exceed the maximum rated value for brief periods, such as may occur while tuning.

The maximum rated plate voltage for class-AB_1 operation is 2000 volts. In class-C telegraphy and plate-modulated service the maximum rated plate voltage is 2000 and 1500 volts respectively.

Modulation — The 4CX300Y can be modulated by any of the methods commonly used with tetrode tubes. Its large reserve plate dissipation makes it especially suited for use in screen-modulated and linear amplifiers in which the plate efficiency is low.

Plate modulation can be applied to the 4CX300Y when it is operated as a class-C amplifier. To obtain 100% modulation with minimum distortion the screen supply voltage should be modulated in phase with the modulation applied to the plate supply voltage. Screen voltage modulation factors between 0.75 and 1.00 may be used.

"Self-modulation" of the screen by means of a resistor in series with the screen supply line is not recommended because of the effects which require a bleeder from screen to cathode as described under "Screen Operation" above.

Special Applications—If it is desired to operate this tube under conditions widely different from those given here, write to EIMAC, Division of Varian, 301 Industrial Way, San Carlos, California, for information and recommendations.

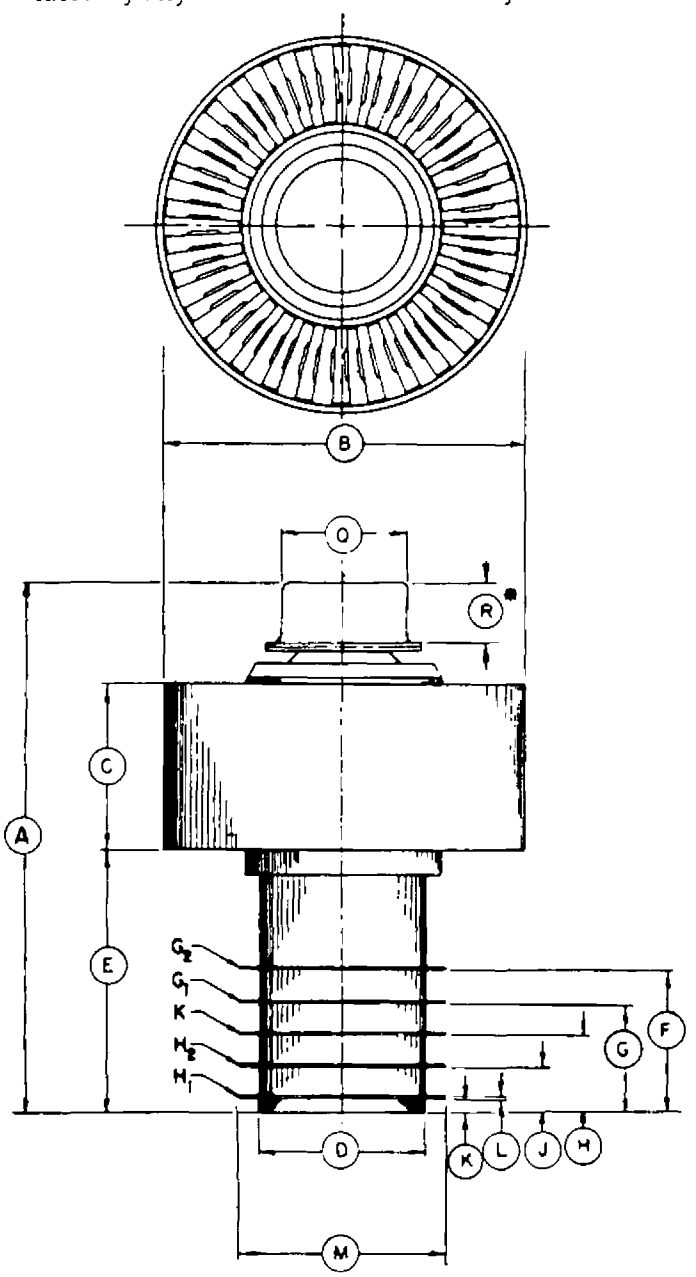

DIMENSION DATA			
REF.	NOM.	MIN.	MAX.
A		2.300	2.500
B		1.610	1.640
C		.710	.790
D		.740	.770
E		1.133	1.195
F		.602	.642
G		.470	.500
H		.329	.359
J		.193	.213
K		.050	.072
L		.010	.020
M		.936	.956
N		.170	.185
P	60°		
Q		.559	.573
R		.240	.280

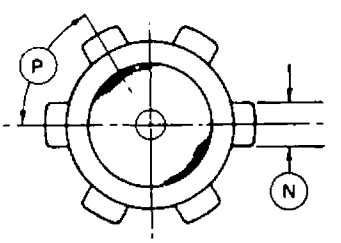

• CONTACT SURFACE

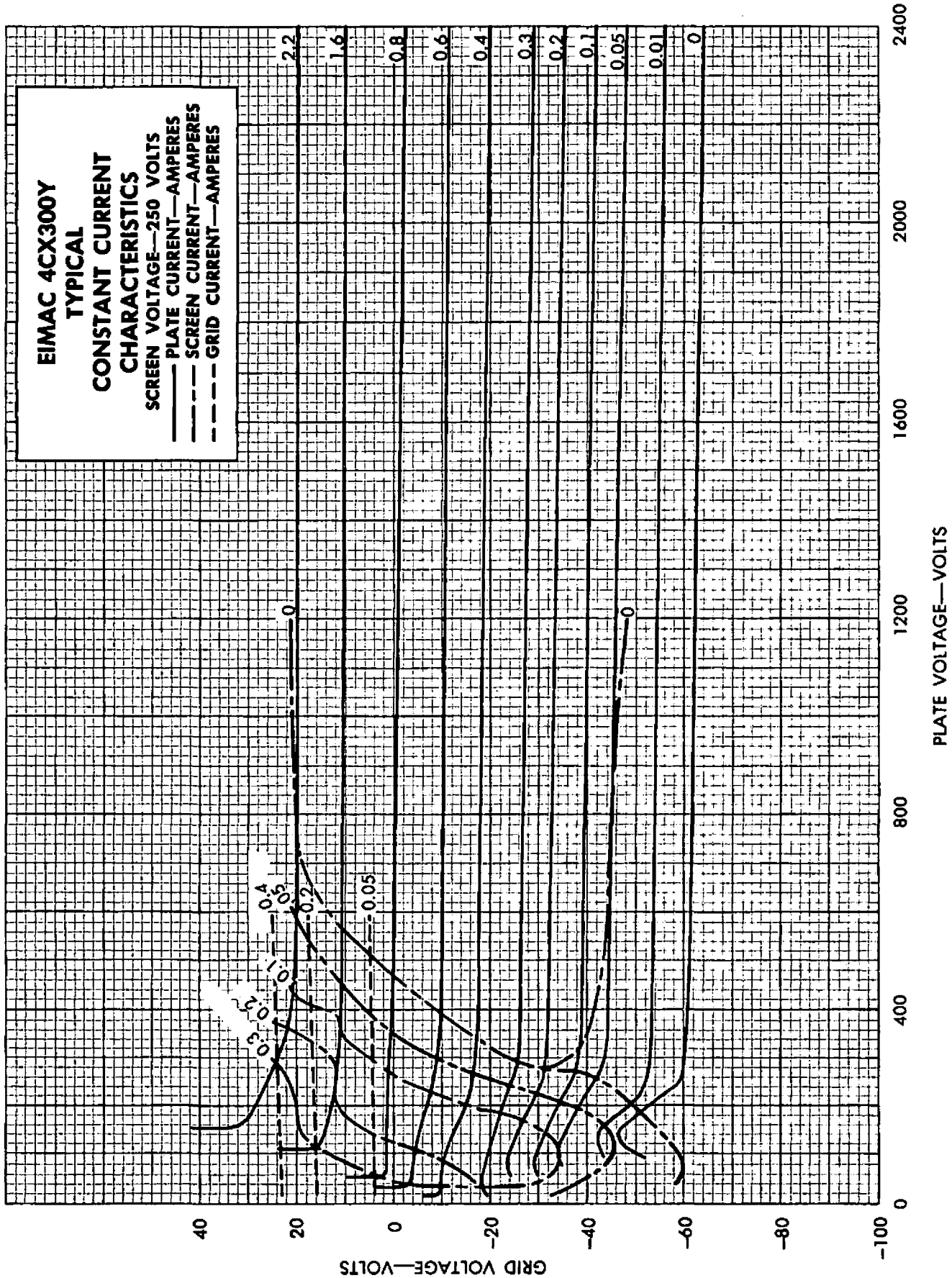
EIMAC 4CX300Y
TYPICAL
CONSTANT CURRENT
CHARACTERISTICS
SCREEN VOLTAGE—250 VOLTS
PLATE CURRENT—AMPERES
SCREEN CURRENT—AMPERES
GRID CURRENT—AMPERES
PLATE VOLTAGE—VOLTS
GRID VOLTAGE—VOLTS
0
400
800
1200
1600
2000
2400
40
20
0
-20
-40
-60
-80
-100
2.2
1.6
0.8
0.6
0.4
0.3
0.2
0.1
0.05
0.01
0
0.4
0.5
0.2
0.05
0.1
0.2
0.3

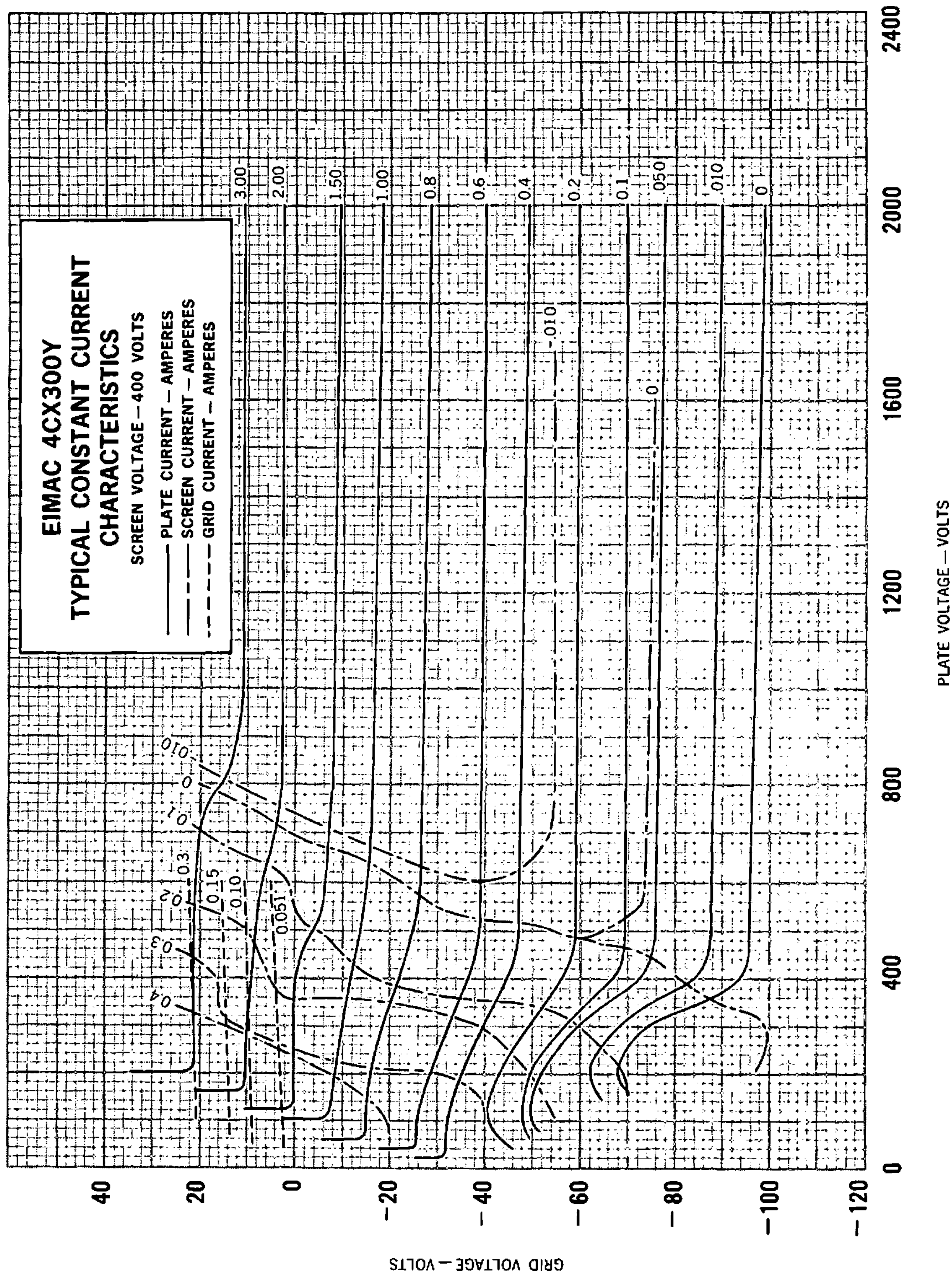
EIMAC 4CX300Y
TYPICAL CONSTANT CURRENT
CHARACTERISTICS
SCREEN VOLTAGE — 400 VOLTS
——— PLATE CURRENT — AMPERES
—— - —— SCREEN CURRENT — AMPERES
- - - - - GRID CURRENT — AMPERES
3.00
2.00
1.50
1.00
0.8
0.6
0.4
0.2
0.1
.050
.010
0
.010
PLATE VOLTAGE — VOLTS
GRID VOLTAGE — VOLTS
0
400
800
1200
1600
2000
2400
40
20
0
−20
−40
−60
−80
−100
−120