ADVANCE DATA

MECHANICAL DATA

Mounting Position	Any
Weight	.8 Lbs. (Approx.)
Cooling	Forced Air
Output Pressurization	60 psia
Minimum Magnet Isolation	4 Inches
Output Coupling	Mates with Modified UG-541/U Flange (holes drilled to clear No. 6-32 screw)
Tuner Drive Mechanism	Rotating Shaft
Tuner Torque	10 In. Oz. (Approx.)
Vibration	0.245" Amplitude, 10-20 cps, 5 G, 20-500 cps
Shock	15 G, 11 ms

ELECTRICAL DATA

HEATER CHARACTERISTICS

Voltage	12.6 Volts
Current	2.6 A
Minimum Preheat Time	180 Seconds

RATINGS (Absolute Maximum)[1]

Heater Voltage	14.0 Volts
Heater Surge Current	10.0 A
Peak Anode Voltage	18.0 kv
Average Power Input	272 Watts
Anode Temperature	150 °C
Voltage Standing Wave Ratio	1.5:1
Duty Cycle	0.001
Pulse Width	3.3 μs

TYPICAL OPERATION

	Osc. 1	Osc. 2
Duty Cycle	0.001	0.001
Pulse Width	0.5	1.0 μs
Rate of Rise of Voltage	180	180 kv/μs
Average Anode Current	16	16 mAdc
Peak Anode Voltage	15 to 17	15 to 17 kv
Average Power Output	75	75 Watts
Pulling Factor	8.0	8.0 Mc
Pushing Factor	0.1	0.1 Mc/a

NOTES:

1. *If the independent absolute ratings are exceeded, serviceability of the tube may be impaired. Refer to MIL-E-1D, para. 6.5.*
2. *Dependable operation and maximum magnetron life can be realized only if the complete system is designed with the magnetron characteristics clearly in mind. This data sheet is intended to acquaint the reader with the basic characteristics of the magnetron and should not be used as an absolute guide. Additional information and assistance with specific applications may be obtained by contacting Sylvania Microwave Device Division, Williamsport, Pa.*

from JEDEC release #4610, Feb. 24, 1964

QUICK REFERENCE DATA

Ku Band Symmetrically Loaded External Cavity Magnetron
Tunable 16.0 to 17.0 kMc
90 kw Peak Power Output
Integral magnets
Suitable for Airborne Systems

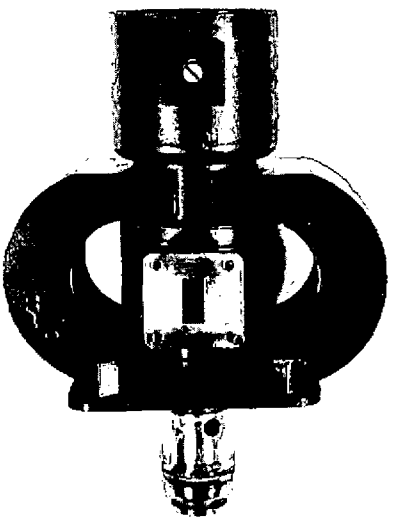

SYLVANIA ELECTRIC PRODUCTS INC.

MICROWAVE DEVICE DIVISION

WILLIAMSPORT, PA.

Prepared and Released By The TECHNICAL PUBLICATIONS SECTION EMPORIUM, PENNSYLVANIA

January 27, 1964

OUTLINE

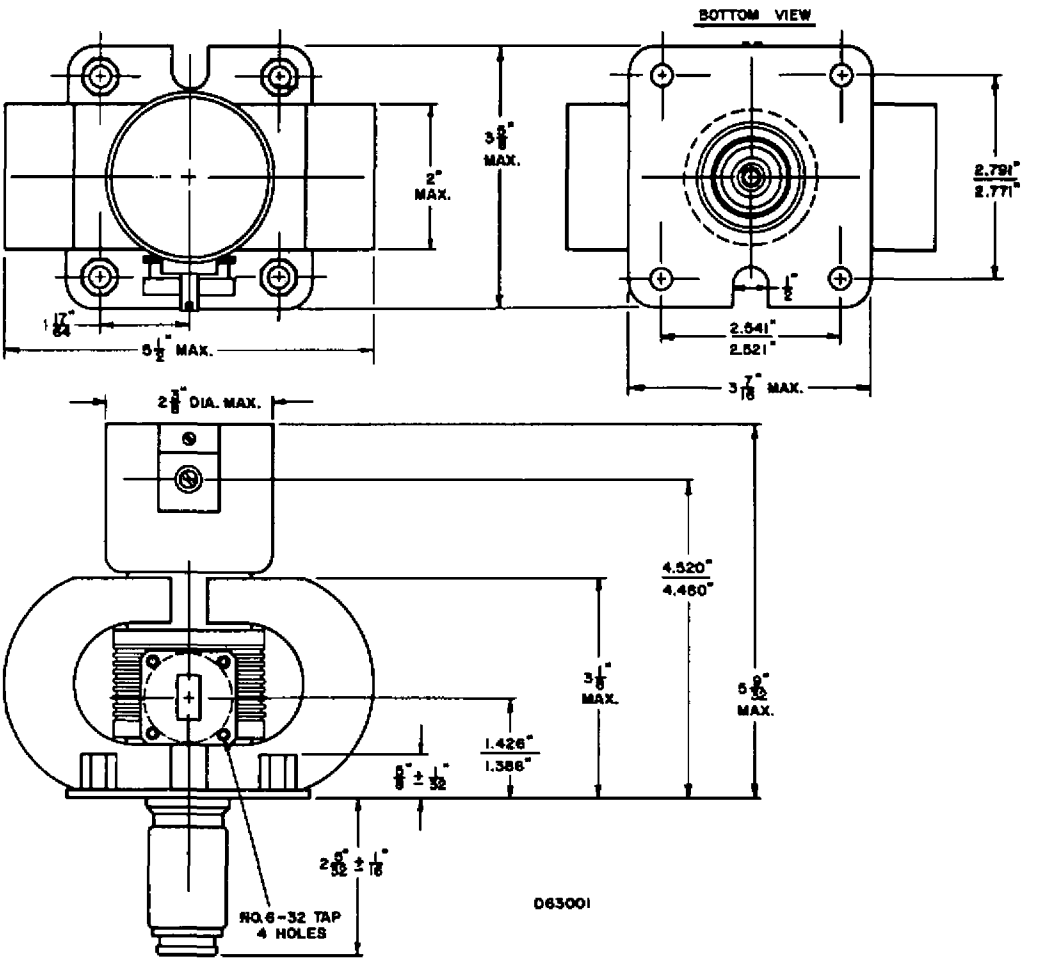
BOTTOM VIEW
3 5/8" MAX.
2" MAX.
2.791"
2.771"
1/2"
1 17/64"
5 1/2" MAX.
2.541"
2.521"
3 7/16" MAX.
2 3/8" DIA. MAX.
4.520"
4.460"
3 1/8" MAX.
5 9/32" MAX.
1.426"
1.386"
5/8" ± 1/32"
2 9/32" ± 1/16"
NO.6-32 TAP
4 HOLES
063001