from JEDEC release #4428, Sept.23, 1963
sponsor: The Machlett Laboratories

ML-8443

DIRECT VIEW STORAGE TUBE

DESCRIPTION

The Machlett type ML-8443 is a 5-inch-diameter, short, compact, direct-view storage tube designed primarily for airborne radar applications. It produces bright visual displays of half-tone images. The overall length is less than 8 inches and maximum diameter is held to 5-1/8 inches.

The ML-8443 design incorporates an on-axis neck with a high-resolution tetrode write gun electrostatically focussed and magnetically deflected, and an on-axis flood gun. A compact magnetic shield is available (optional), which can be made an integral part of the tube.

PERFORMANCE

Values given are for typical tube unless otherwise specified

Writing Speed	200,000	in/sec
Light Output (vs voltage = 6.5 kVdc)	1000	ftL
Written Resolution	70	lines/in
Storage Time, minimum	1	min

GENERAL CHARACTERISTICS

MECHANICAL

Outline	Per Drawing No. ED-28314
Dimensions	Per Table "B"
Pin Connections	Per Table "A"

ELECTRICAL

Flood Gun

Heater Voltage (AC or DC)	6.3	V
Heater Current	.6 ± 10%	A

Write Gun

Heater Voltage (AC or DC)	6.3	V
Heater Current	.3 ± 10%	A
Focusing Method	Electrostatic	
Deflection Method	Magnetic	

TYPICAL OPERATING CONDITIONS

All Voltages are referenced to fk unless otherwise indicated

Viewing Section

vs Voltage	6500	Vdc
be Voltage	0	V
ce Voltage	500	Vdc
fk Voltage	0	V
fg1 Voltage	0	V
fg2 Voltage	25	Vdc
fg3 Voltage	0	V
fg4 Voltage	7	Vdc

Writing Section

wk Voltage	-2500	Vdc
wg1 Voltage*	-5 to -30	Vdc
wg2 Voltage*	300	Vdc
wg3 Voltage	0	V
wg4 Voltage*	0	V
wg5 Voltage	0	V

* Referenced to wk.

TABLE A

TUBE CONNECTIONS

SYMBOL	ELECTRODE	CONNECTION
fh	flood-gun heater	Cap 5
fh	flood-gun heater	Cap 6
fk	flood-gun cathode	Cap 9
fg1	flood-gun grid	Cap 8
fg2	flood-gun grid	Cap 7
fg3	flood-gun grid†	Pin 9
fg4	flood-gun uniformity grid	Cap 2
ce	collector electrode	Cap 3
ss	storage surface	No Con.
be	backing electrode (storage mesh)	Cap 4
vs	view screen	Cap 1
wh	write-gun heater	Pin 5
wh	write-gun heater	Pin 6
wk	write-gun cathode	Pin 4
wg1	write-gun control grid	Pin 3
wg2	write-gun grid	Pin 8
wg3	write-gun grid†	Pin 9
wg4	write-gun focus electrode	Pin 1
wg5	write-gun grid†	Pin 9
--	No Connection	Pins 2 & 7

† wg3, wg5 and fg3 are internally connected.

TABLE B

DIMENSIONS AND NOTES FOR OUTLINE DRAWING NO. ED-28314

ref.	inches (or degrees) min.	nom.	max.	notes
A			5.25	
B	4.00			1
C		0.88		
D	7.75	7.88	8.00	
E		3.50		
F		0.81		
G		1.44		
H		2.75		
J		5.13		
a		60°		
b		60°		

NOTES:

1. Indicates useful screen diameter.
2. Recessed small ball caps, JEDEC J1-22 (Caps 1-4). See Table A.
3. Recessed small ball caps, JEDEC J1-25 (Caps 5-9). See Table A.
4. Base fits standard Vidicon socket. (Pins 1-9). See Table A.

ML-8443

OUTLINE DRAWING

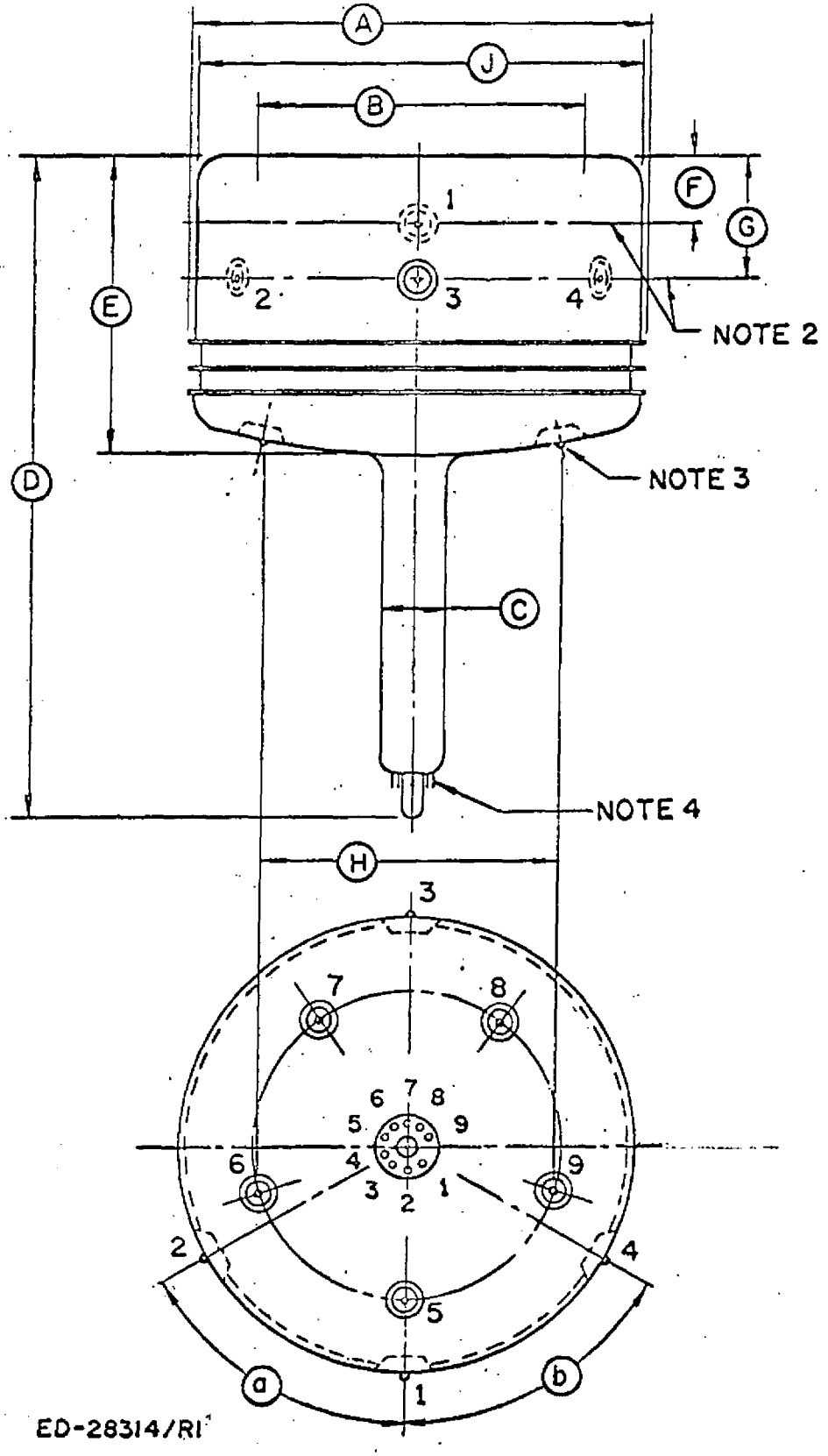

REFER TO TABLE "A" AND "B"