Amperex® ELECTRONIC CORPORATION
230 duffy avenue, hicksville, l. i., n. y.

TUBE TYPE
8429

ADVANCE DATA*

The Amperex 8429 is an exceptionally linear coaxial power tetrode with an external anode designed for linear amplifier single sideband service. The plate dissipation is 4000 watts and the tube can be operated to full ratings up to 60 Mc.

GENERAL CHARACTERISTICS

MECHANICAL

Mounting Position	Vertical, plate up or down
Net Weight (approx.)	11 lbs.
Max. Temperatures for All Parts of Envelope	220°C
Cooling Requirements	Forced air cooling on anode and grid terminals

Air Cooling Characteristics:

Plate Dissipation	Altitude	Max. Air Inlet Temp.	Min. Air Flow (cu.ft./min)	Total Pressure (in. of water)
3.5 KW	Sea level	35°C	160	0.86
4.0 KW	Sea level	35°C	212	0.78

Cathode	Oxide coated
Dimensions	See outline drawing

ELECTRICAL

Filament Voltage	15 volts (approx.)
Filament Current	16 amps (approx.)
Direct Interelectrode Capacitances	
Grid No. 1 to Plate	0.2 pf (approx.)
Input	115 pf (approx.)
Output	20 pf (approx.)
Typical Characteristics	
Amplification Factor Grid No. 1 to Grid No. 2 at E_b = 5 kv, E_{c2} = 600V, I_b = 700 ma	3.5
Transconductance at E_b = 1 kv, E_{c2} = 600V, I_b = 6 amps	60,000 μmhos

Amperex

from JEDEC release #4532, Dec. 16, 1963

Class AB_1 Grounded Cathode Linear RF Amplifier
Single Sideband Suppressed Carrier Operation
Maximum Ratings, Absolute Values
(Frequencies up to 60 Mc)

	CCS
DC Plate Voltage	5500 volts
DC Grid No. 2 Voltage	1000 volts
DC Grid No. 1 Voltage	-250 volts
Plate Dissipation	4000 watts
Grid No. 2 Dissipation	200 watts
Grid No. 1 Dissipation	10 watts
DC Plate Current (Single Tone)	2 amps

Typical Operation
Single Tone and/or Two Tone Modulation

Frequency	60 Mc
DC Plate Voltage	5000 volts
DC Grid No. 2 Voltage	600 volts
DC Grid No. 1 Voltage (approx.)[1]	-145 volts
Zero Signal DC Plate Current	700 ma
Zero Signal DC Grid No. 2 Current	5 ma
Zero Signal DC Grid No. 1 Current	0 ma

Single Tone Modulation

	CCS
Max. Signal DC Plate Current	1800 ma
Max. Signal DC Grid No. 2 Current	80 ma
Max. Signal DC Grid No. 1 Current	0 ma
Max. Signal Plate Power Output	6000 watts
Max. Signal Plate Power Input	9000 watts
Max. Signal Load Power Output (Circuit Efficiency 95%)	5850 watts
Plate Dissipation	2850 watts
Total Efficiency including Circuit Losses	65.0 %

Two Tone Modulation

Average DC Plate Current	1260 ma
Average DC Grid No. 2 Current	30 ma
Average DC Grid No. 1 Current	0 ma
Max. Resultant Peak RF Grid Voltage	160 volts
Average Plate Power Output	3000 watts
Average Load Power Output	2900 watts
Peak Envelope Load Power Output	5850 watts
Third Order Intermodulation Distortion[2]	35 db
Fifth Order Intermodulation Distortion[2]	40 db
Average Power Input	6300 watts
Average Plate Dissipation	3200 watts
Total Efficiency including Circuit Losses	46.0 %

[1] Adjust to give desired value of plate current at zero grid No. 1 signal.
[2] Distortion is referenced to either tone of a two-tone test pattern.

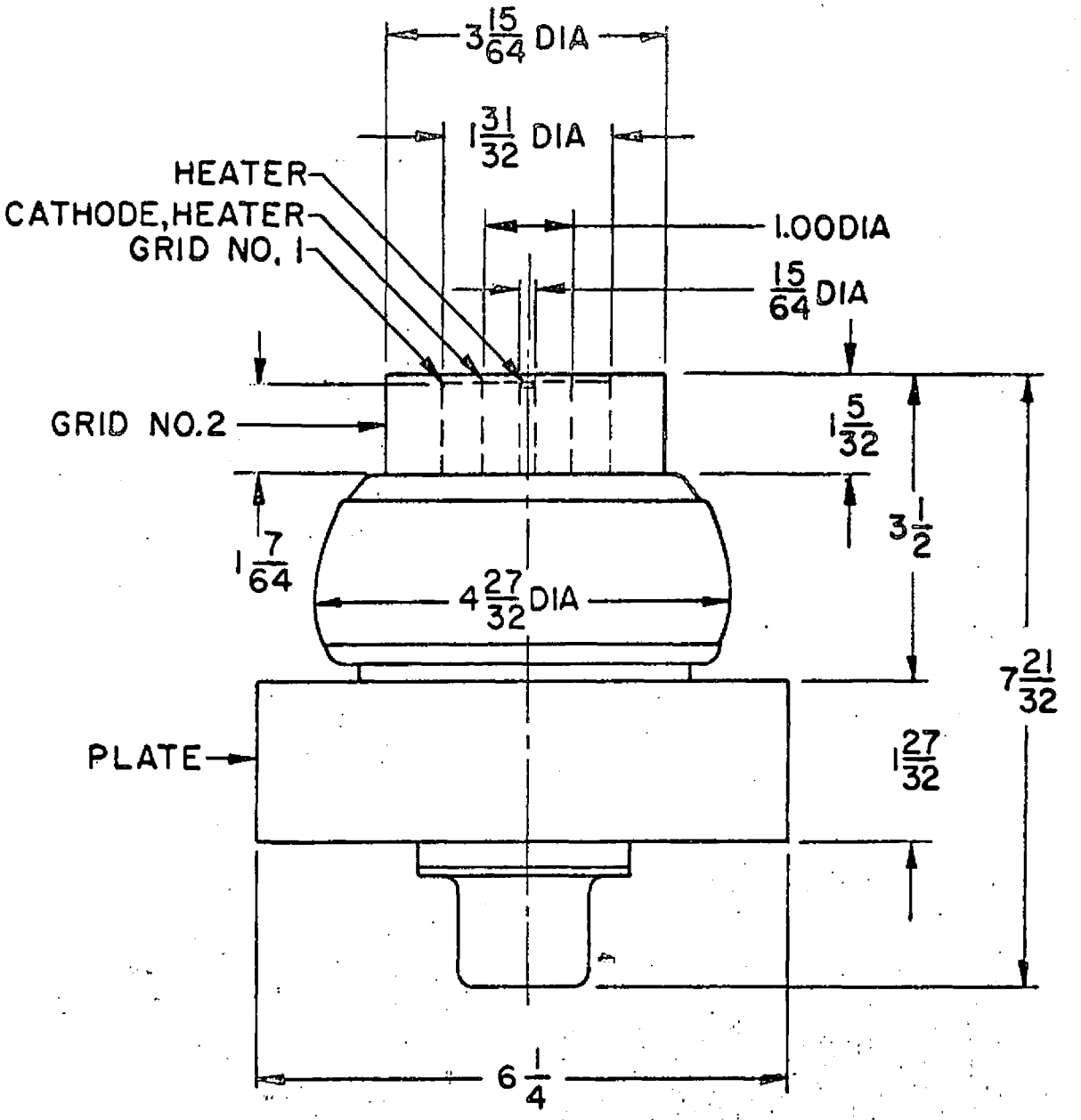
3 15/64 DIA
1 31/32 DIA
HEATER
CATHODE, HEATER
GRID NO. 1
1.00 DIA
15/64 DIA
GRID NO. 2
1 5/32
3 1/2
1 7/64
4 27/32 DIA
7 21/32
PLATE
1 27/32
6 1/4

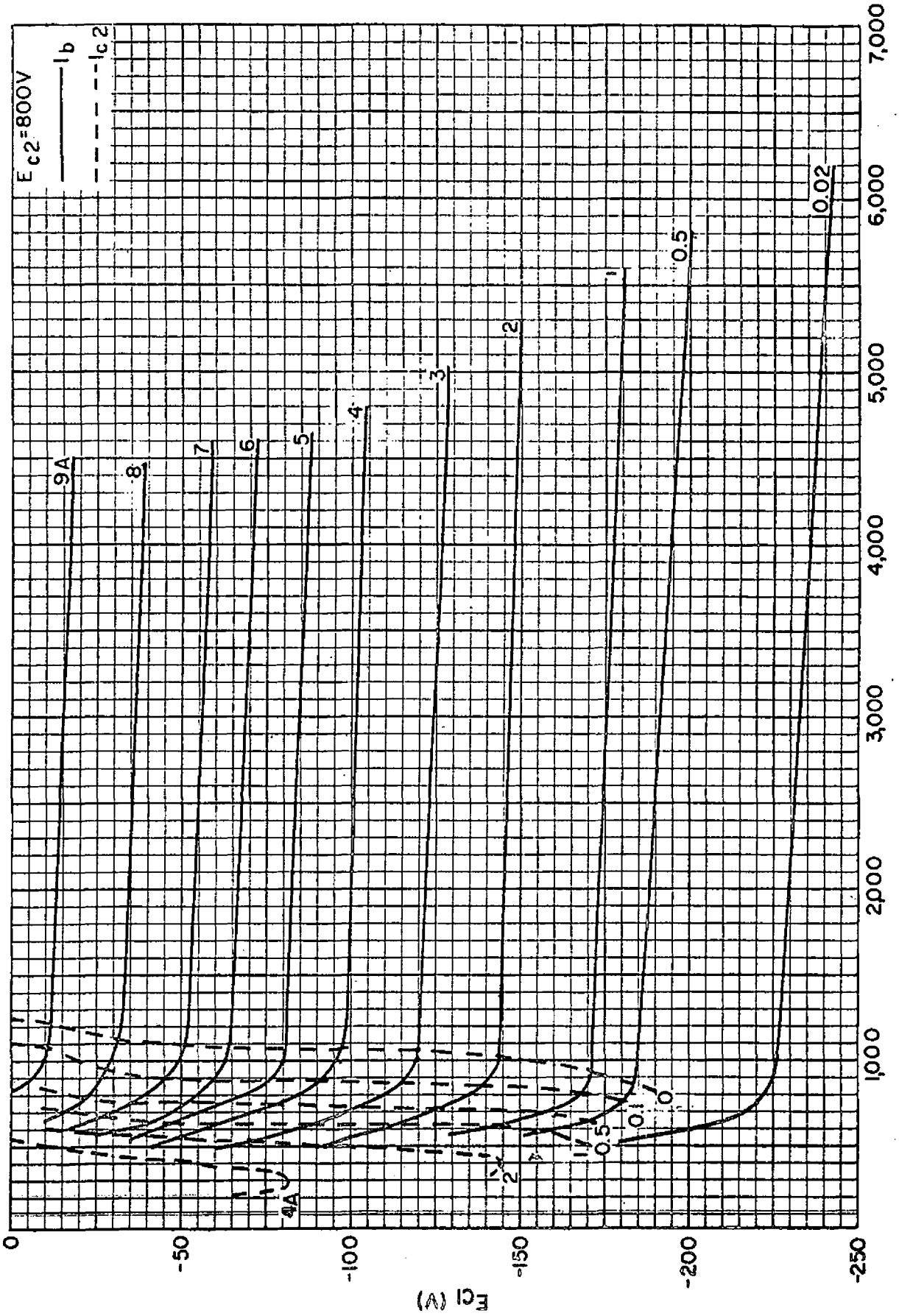

CONSTANT CURRENT CHARACTERISTICS