TECHNICAL DATA

8349
4CX35,000C

RADIAL-BEAM
POWER TETRODE

The EIMAC 8349/4CX35,000C is a ceramic/metal, forced-air cooled power tetrode intended for use at the 50 to 150 kilowatt output power level. It is recommended for use as a Class-C rf amplifier or oscillator, a Class-AB rf linear amplifier, or a Class-AB push-pull af amplifier or modulator. The 8349/4CX35,000C is also useful as a plate and screen modulated Class-C rf amplifier.

The forced-air cooled anode is rated at 35 kilowatts maximum dissipation.

GENERAL CHARACTERISTICS [1]

ELECTRICAL

Filament: Thoriated Tungsten	
Voltage	10.0 V
Current, at 10.0 volts	295 A
Amplification Factor (Average):	
Grid to Screen	4.5
Direct Interelectrode Capacitances (grounded cathode)[2]	
Cin	440 pF
Cout	55 pF
Cgp	2.3 pF
Frequency of Maximum Rating:	
CW	30 MHz

1. Characteristics and operating values are based upon performance tests. These figures may change without notice as the result of additional data or product refinement. EIMAC Division of Varian should be consulted before using this information for final equipment design.
2. Capacitance values are for a cold tube as measured in a special shielded fixture in accordance with Electronic Industries Association Standard RS-191.

MECHANICAL

Maximum Overall Dimensions:	
Length	17.34 in; 440.4 mm
Diameter	9.75 in; 247.7 mm
Net Weight	50 lb; 22.7 kg
Operating Position	Vertical, base up or down
Maximum Operating Temperature:	
Ceramic/Metal Seals	250°C
Anode Core	250°C
Cooling	Forced Air
Base	Special, graduated rings
Recommended Socket	EIMAC SK-1500

(Revised 12-1-70) © 1963, 1967, 1970 by Varian

Printed in U.S.A.

RADIO FREQUENCY LINEAR AMPLIFIER GRID DRIVEN

Class AB

MAXIMUM RATINGS:

DC PLATE VOLTAGE	20,000	VOLTS
DC SCREEN VOLTAGE	2500	VOLTS
DC PLATE CURRENT	15.0	AMPERES
PLATE DISSIPATION	35,000	WATTS
SCREEN DISSIPATION	1750	WATTS
GRID DISSIPATION	500	WATTS

1. Adjust to specified zero-signal dc plate current.
2. Approximate value.

TYPICAL OPERATION (Frequencies to 30 MHz)
Class AB_1, Grid Driven, Peak Envelope or Modulation Crest Conditions

Plate Voltage	15.0	kVdc
Screen Voltage	1.5	kVdc
Grid Voltage [1]	-400	Vdc
Zero-Signal Plate Current	1.0	Adc
Single Tone Plate Current	5.7	Adc
Single-Tone Screen Current [2]	0.9	Adc
Peak rf Grid Voltage [2]	250	v
Peak Driving Power [2]	0	w
Plate Dissipation	30	kW
Plate Output Power	55	kW
Resonant Load Impedance	1280	Ω

RADIO FREQUENCY POWER AMPLIFIER OR OSCILLATOR

Class C Telegraphy or FM Telephony
(Key-Down Conditions)

MAXIMUM RATINGS:

DC PLATE VOLTAGE	20,000	VOLTS
DC SCREEN VOLTAGE	2500	VOLTS
DC PLATE CURRENT	15.0	AMPERES
PLATE DISSIPATION	35,000	WATTS
SCREEN DISSIPATION	1750	WATTS
GRID DISSIPATION	500	WATTS

TYPICAL OPERATION (Frequencies to 30 MHz)

Plate Voltage	10.0	15.0	19.0	kVdc
Screen Voltage	750	750	750	Vdc
Grid Voltage	-425	-480	-550	Vdc
Plate Current	7.5	6.8	6.96	Adc
Screen Current [1]	0.84	0.51	0.80	Adc
Grid Current [1]	0.29	0.23	0.35	Adc
Peak rf Grid Voltage [1]	600	660	730	v
Calculated Driving Power [1]	180	150	258	W
Plate Dissipation	19.3	19.0	21.0	kW
Plate Output Power	55.5	82.5	110	kW

1. Approximate value.

PLATE MODULATED RADIO FREQUENCY POWER AMPLIFIER-GRID DRIVEN

Class C Telephony (Carrier Conditions)

MAXIMUM RATINGS:

DC PLATE VOLTAGE	14,000	VOLTS
DC SCREEN VOLTAGE	2000	VOLTS
DC PLATE CURRENT	15.0	AMPERES
PLATE DISSIPATION [1]	23,000	WATTS
SCREEN DISSIPATION [2]	1750	WATTS
GRID DISSIPATION [2]	500	WATTS

1. Corresponds to 35,000 watts at 100% sine-wave modulation.
2. Average, with or without modulation.

TYPICAL OPERATION (Frequencies to 30 MHz)

Plate Voltage	12.0	kVdc
Screen Voltage	750	Vdc
Grid Voltage	-600	Vdc
Plate Current	5.4	Adc
Screen Current [1]	0.52	Adc
Grid Current [1]	0.16	Adc
Peak af Screen Voltage [2] (100% modulation)	500	v
Peak rf Grid Voltage [1]	740	v
Calculated Driving Power	125	W
Plate Dissipation	13.2	kW
Plate Output Power	55.0	kW
Resonant Load Impedance	1120	Ω

1. Approximate value.
2. Approximate value, depending upon degree of driver modulation.

AUDIO FREQUENCY POWER AMPLIFIER OR MODULATOR
Class AB, Grid Driven (Sinusoidal Wave)

MAXIMUM RATINGS (Per Tube):

DC PLATE VOLTAGE	20,000	VOLTS
DC SCREEN VOLTAGE	2,500	VOLTS
DC PLATE CURRENT	15.0	AMPERES
PLATE DISSIPATION	35,000	WATTS
SCREEN DISSIPATION	1750	WATTS
GRID DISSIPATION	500	WATTS

1. Approximate value.

TYPICAL OPERATION (Two Tubes)

Plate Voltage	12.0	kVdc
Screen Voltage	1.5	kVdc
Grid Voltage[1/3]	-400	Vdc
Zero-Signal Plate Current	3.0	Adc
Max Signal Plate Current	9.2	Adc
Max Signal Screen Current[1]	1.8	Adc
Peak af Grid Voltage[2]	280	v
Max Signal Plate Dissipation[2]	20	kW
Plate Output Power	70	kW
Load Resistance (plate to plate)	2860	Ω

2. Per Tube
3. Adjust to give stated zero-signal plate current.

NOTE: TYPICAL OPERATION data are obtained from direct measurement or by calculation from published characteristic curves. Adjustment of the rf grid voltage to obtain the specified plate current at the specified bias, screen and plate voltages is assumed. If this procedure is followed, there will be little variation in output power when the tube is changed, even though there may be some variation in grid and screen current. The grid and screen currents which result when the desired plate current is obtained are incidental and vary from tube to tube. These current variations cause no difficulty so long as the circuit maintains the correct voltage in the presence of the variations in current. In the case of Class C Service, if grid bias is obtained principally by means of a grid resistor, the resistor must be adjustable to obtain the required bias voltage when the correct rf grid voltage is applied.

RANGE VALUES FOR EQUIPMENT DESIGN

	Min.	Max.	
Heater: Current at 10.0 volts	280	310	A
Interelectrode Capacitances (grounded cathode connection)[2]			
Cin	410	470	pF
Cout	50	60	pF
Cgp	1.5	3.2	pF

2. Capacitance values are for a cold tube as measured in a special shielded fixture in accordance with Electronic Industries Association Standard RS-191.

APPLICATION

MECHANICAL

MOUNTING - The 4CX35,000C must be operated with its axis vertical. The base of the tube may be down or up at the convenience of the circuit designer.

SOCKET - The EIMAC sockets, type SK-1500, and SK-1510 have been designed especially for the concentric base terminals of the 4CX35,000C.

COOLING - The maximum temperature rating for the external surfaces of the 4CX35,000C is 250°C. Sufficient forced-air circulation must be provided to keep the temperature of the anode at the base of the cooling fins and the temperature of the ceramic/metal seals below 250°C.

Air-flow requirements to maintain core temperature at 225°C in 40° ambient air are tabulated below (for operation below 30 megahertz.) These data are for air flowing in the base-to-anode direction.

	Base-to-Anode Air Flow			
	Sea Level		10,000 Feet	
Plate Dissipation* (Watts)	Air Flow (CFM)	Pressure Drop (Inches of Water)	Air Flow (CFM)	Pressure Drop (Inches of Water)
15,000	554	1.2	795	1.7
20,000	820	2.1	1100	3.0
25,000	1140	3.6	1665	5.2
30,000	1465	5.0	2140	7.4
35,000	1800	7.2	2630	10.3

* Since the power dissipated by the filament represents about 3000 watts and since grid-plus-screen dissipation can, under some conditions, represent another 2250 watts, allowance has been made in preparing this tabulation for an additional 5250 watts dissipation.

The blower selected in a given application must be capable of supplying the desired air flow at a back pressure equal to the pressure drop shown above plus any drop encountered in ducts and filters.

Separate cooling of the tube base is required and is accomplished by directing approximately 120 cfm of air horizontally through the socket from the side. It is preferable to direct this air through three equally spaced ducts.

The well in the center of the baseplate of the tube is a critical area which requires cooling to maintain envelope temperatures less than 250°C. For most applications, 1 to 2 CFM of air directed through the center of the socket is sufficient for this purpose.

At other altitudes and ambient temperatures the flow rate must be modified to obtain equivalent cooling. The flow rate and corresponding pressure differential must be determined individually in such cases, using rated maximum temperatures as the criteria for satisfactory cooling.

ELECTRICAL

FILAMENT OPERATION - The peak emission at rated filament voltage of the EIMAC 4CX35,000C is normally many times the peak emission required for communication service. A small decrease in filament temperature due to reduction of filament voltage can increase the life of the 4CX35,000C by a substantial percentage. It is good practice to determine the nominal filament voltage for a particular application that will not affect the operation of the equipment. This is done by measuring some important parameter of performance such as plate current, power output, or distortion while filament voltage is reduced on the 4CX35,000C. At some point in filament voltage there will be a noticeable reduction in plate current, or power output, or an increase in distortion. Operation may be at a filament voltage slightly higher than that point at which performance appears to deteriorate. This voltage should be measured at the socket with a 1% meter and periodically checked to maintain proper operation.

Filament starting current must be limited to a maximum of 900 amperes.

Voltage between filament and the base plates of tube and SK-1500 socket, must not exceed 100 volts.

GRID OPERATION - The 4CX35,000C grid has a maximum dissipation rating of 500 watts. Precautions should be observed to avoid exceeding this rating. The grid bias and driving power should be kept near the values shown in the "Typical Operation" sections of the data sheet whenever possible. The maximum grid circuit resistance should not exceed 100,000 ohms per tube.

SCREEN OPERATION - The power dissipated by the screen of the 4CX35,000C must not exceed 1750 watts.

Screen dissipation, in cases where there is no ac applied to the screen, is the simple product of the screen voltage and the screen current. If the screen voltage is modulated, the screen dissipation will depend upon loading, driving power, and carrier screen voltage.

Screen dissipation is likely to rise to excessive values when the plate voltage, bias voltage, or plate load are removed with filament and screen voltages applied. Suitable protective means must be provided to limit the screen dissipation to 1750 watts in the event of circuit failure.

PLATE DISSIPATION - The plate-dissipation rating for the 4CX35,000C is 35,000 watts. When the 4CX35,000C is operated as a plate-modulated rf amplifier, under carrier conditions, the maximum plate dissipation is 23,000 watts.

INTERELECTRODE CAPACITANCE - The actual internal interelectrode capacitance of a tube is influenced by many variables in most applications, such as stray capacitance to the chassis, capacitance added by the socket used, stray capacitance between tube terminals, and wiring effects. To control the actual capacitance values within the tube, as the key component involved, the industry and the Military Services use a standard test procedure as described in Electronic Industries Association Standard RS-191. This requires the use of specially constructed test fixtures which effectively shield all external tube leads from each other and eliminates any capacitance reading to "ground". The test is performed on a cold tube. Other factors being equal, controlling internal tube capacitance in this way normally assures good interchangeability of tubes over a period of time, even when the tube may be made by different manufacturers. The capacitance values shown in the manufacturer's technical data, or test specifications, normally are taken in accordance with Standard RS-191.

The equipment designer is therefore cautioned to make allowance for the actual capaci-

tance values which will exist in any normal application. Measurements should be taken with the socket and mounting which represent approximate final layout if capacitance values are highly significant in the design.

HIGH VOLTAGE - Normal operating voltages used with the 4CX35,000C are deadly, and the equipment must be designed properly and operating precautions must be followed. Design all equipment so that no one can come in contact with high voltages. All equipment must include safety enclosures for high-voltage circuits and terminals, with interlock switches to open primary circuits of the power supply and to discharge high-voltage condensers whenever access doors are opened. Interlock switches must not be bypassed or "cheated" to allow operation with access doors open. Always remember that HIGH VOLTAGE CAN KILL.

X-RADIATION - High-vacuum tubes operating at voltages higher than 10 kilovolts produce progressively more dangerous X-ray radiation as the voltage is increased. The 4CX35,000C, operating at its rated voltages and currents, is a potential X-ray hazard. Only limited shielding is afforded by the tube envelope. Moreover, the X-ray radiation level can increase significantly with aging and gradual deterioration, due to leakage paths or emission characteristics as they are affected by the high voltage. X-ray shielding must be provided on all sides of tubes operating at these voltages to provide adequate protection throughout the tube's life. Periodic checks on the X-ray level should be made, and the tube should never be operated without adequate shielding in place when voltages above 10 kilovolts are in use. Lead glass, which attenuates X-rays, is available for viewing windows. If there is any doubt as to the requirement for or the adequacy of shielding, an expert in this field should be contacted to perform an X-ray survey of the equipment.

Operation of high-voltage equipment with interlock switches "cheated" and cabinet doors open in order to be better able to locate an equipment malfunction can result in serious X-ray exposure.

SPECIAL APPLICATIONS - If it is desired to operate this tube under conditions widely different from those given here, write to Power Grid Tube Product Manager, EIMAC Division of Varian, 301 Industrial Way, San Carlos, California 94070 for information and recommendations.

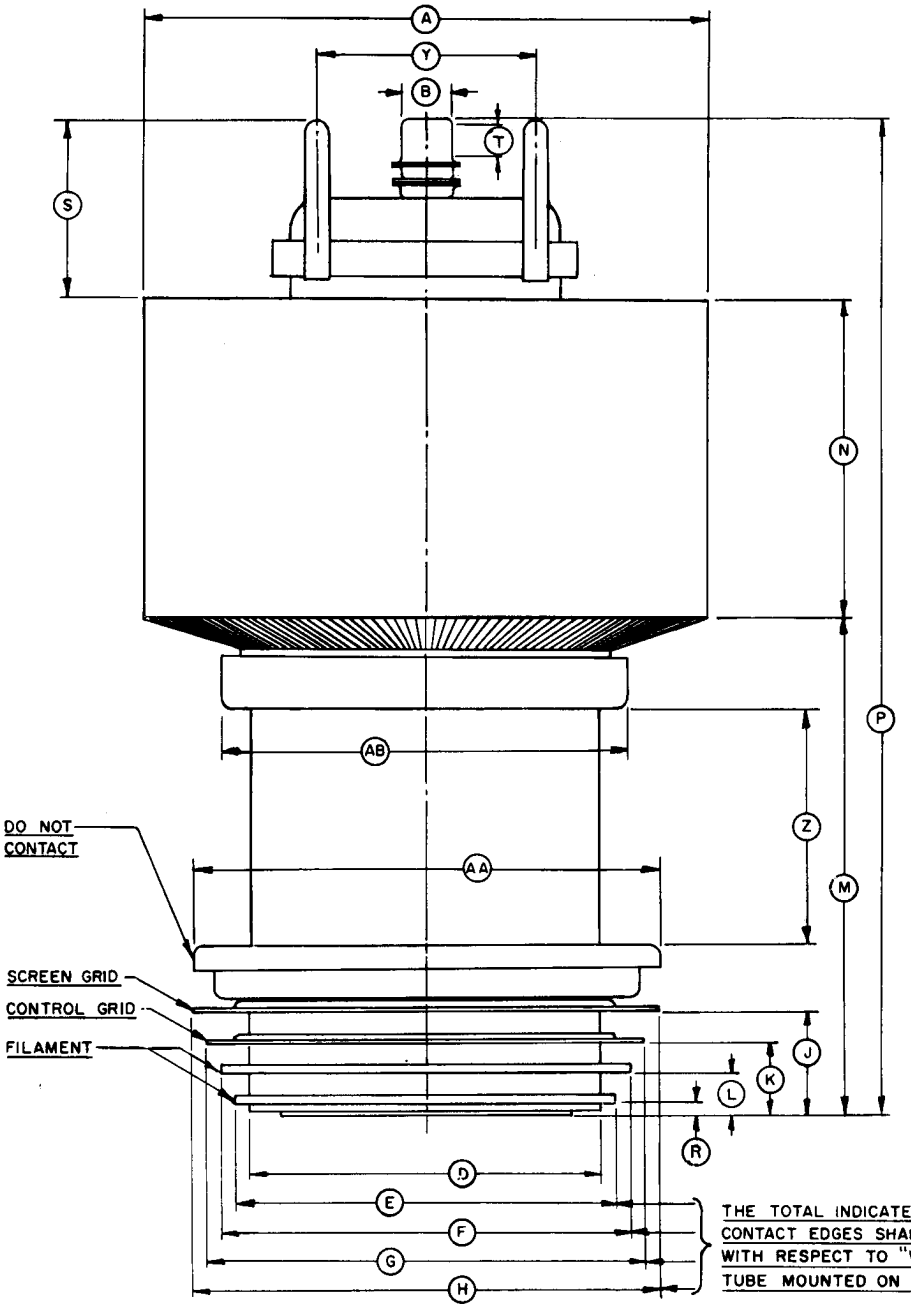

DIMENSIONAL DATA				
DIM.	INCHES		MILLIMETERS	
	MIN.	MAX.	MIN.	MAX.
A	9.500	9.750	241.30	247.65
B	0.860	0.890	21.84	22.60
D	5.980	6.020	151.89	152.91
E	6.510	6.560	165.35	166.62
F	6.980	7.020	177.29	178.31
G	7.480	7.520	189.99	191.01
H	7.975	8.015	202.57	203.58
J	1.750	1.800	44.45	45.72
K	1.220	1.270	30.99	32.26
L	0.690	0.740	17.53	18.80
M	8.442	8.692	214.43	220.78
N	5.375	5.625	136.52	142.88
P	17.070	17.340	433.58	440.44
R	0.173	0.213	4.40	5.41
S	3.062 (1)		77.77 (1)	
T	0.485	0.515	12.32	13.08
V	— —	0.135	— —	3.43
W	1.250	1.270	31.75	32.26
X	0.490	0.530	12.45	13.46
Y	4.500 (1)		114.30 (1)	
Z	3.750 (1)		95.25 (1)	
AA	8.000 (1)		203.20 (1)	
AB	6.875 (1)		174.63 (1)	

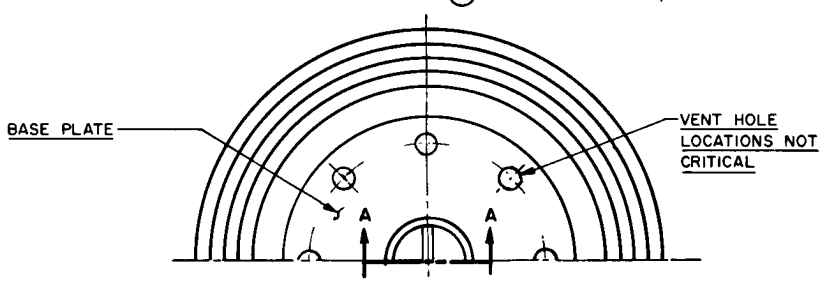

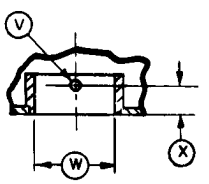

SECTION A–A
ROTATED 180°

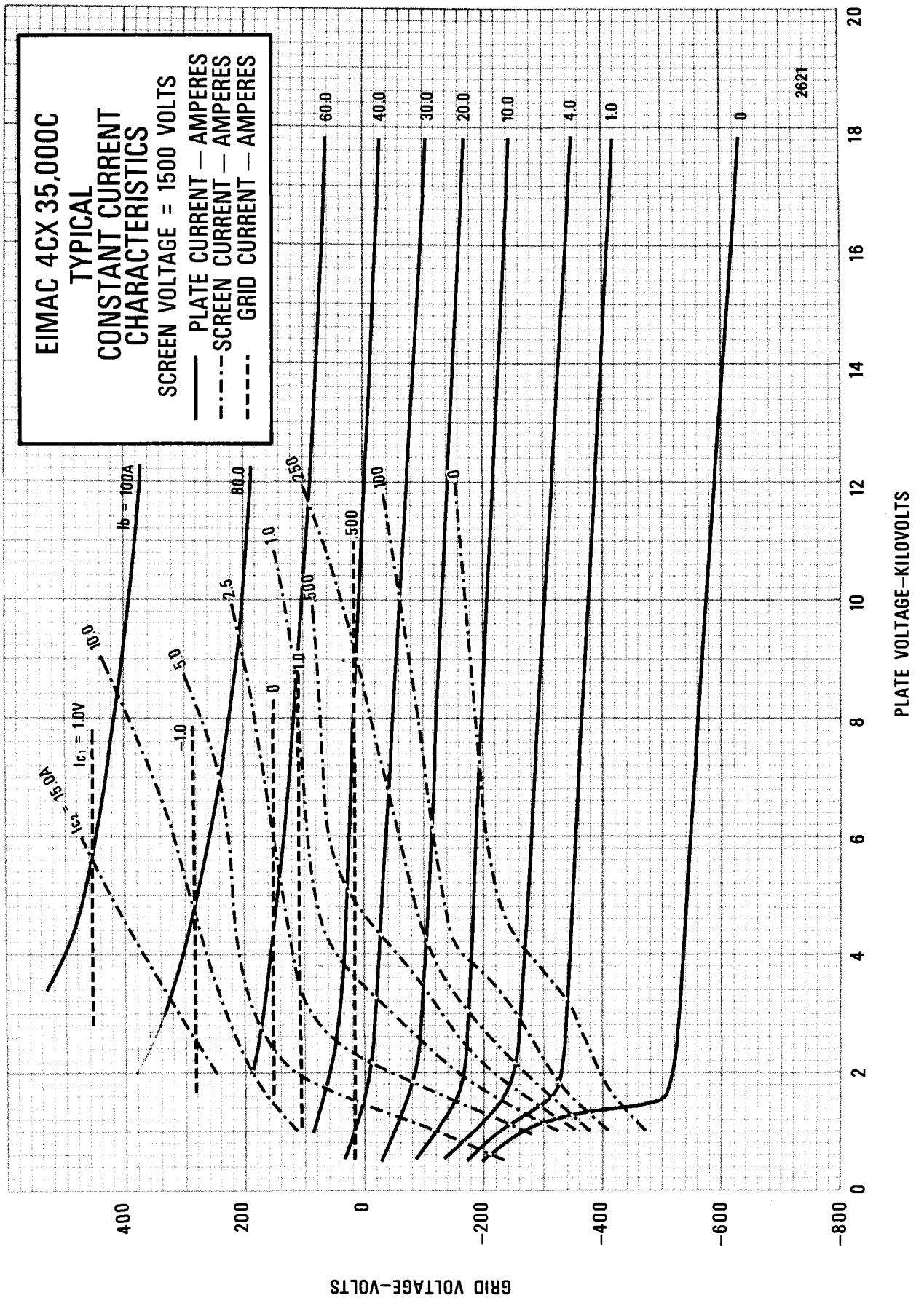
EIMAC 4CX 35,000C
TYPICAL
CONSTANT CURRENT
CHARACTERISTICS
SCREEN VOLTAGE = 1500 VOLTS
PLATE CURRENT — AMPERES
SCREEN CURRENT — AMPERES
GRID CURRENT — AMPERES
Ib = 100A
80.0
60.0
40.0
30.0
20.0
10.0
4.0
1.0
0
2621
PLATE VOLTAGE—KILOVOLTS
GRID VOLTAGE—VOLTS

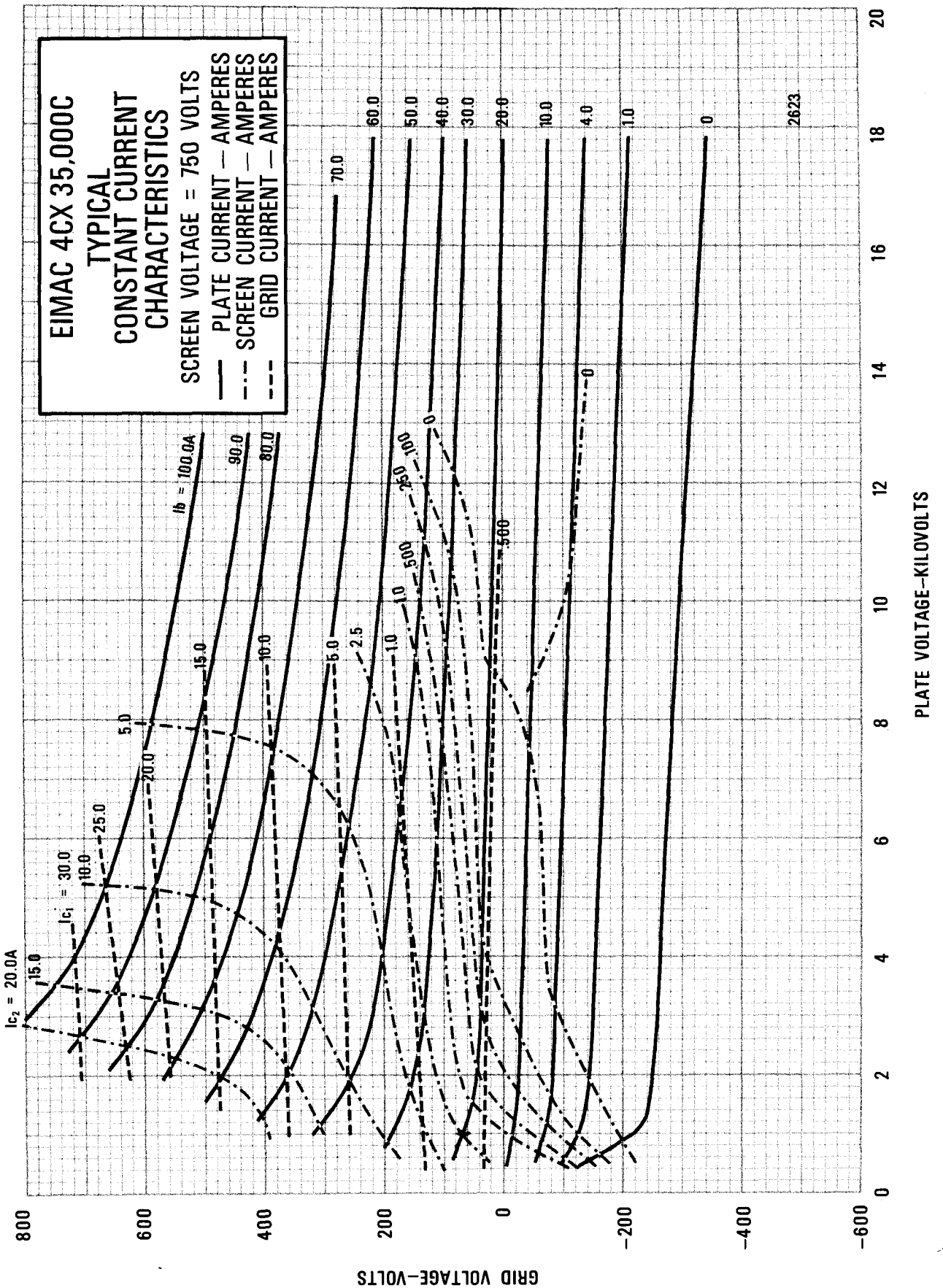
EIMAC 4CX 35,000C
TYPICAL
CONSTANT CURRENT
CHARACTERISTICS
SCREEN VOLTAGE = 750 VOLTS
PLATE CURRENT — AMPERES
SCREEN CURRENT — AMPERES
GRID CURRENT — AMPERES
Ib = 100.0A
90.0
80.0
70.0
60.0
50.0
40.0
30.0
20.0
10.0
4.0
1.0
0
2623
Ic2 = 20.0A
Ic1 = 30.0
15.0
10.0
25.0
20.0
5.0
15.0
10.0
5.0
2.5
1.0
1.0
500
250
100
0
500
0
GRID VOLTAGE—VOLTS
800
600
400
200
0
-200
-400
-600
PLATE VOLTAGE—KILOVOLTS
0
2
4
6
8
10
12
14
16
18
20

TECHNICAL DATA

8349
4CX35,000C

RADIAL-BEAM
POWER TETRODE

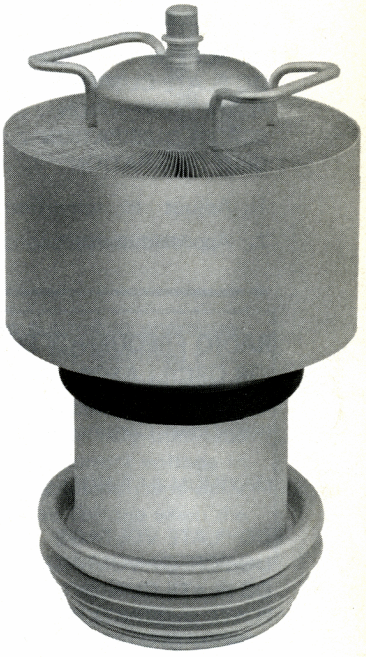

The EIMAC 8349/4CX35,000C is a ceramic/metal, forced-air cooled power tetrode intended for use at the 50 to 150 kilowatt output power level. It is recommended for use as a Class-C rf amplifier or oscillator, a Class-AB rf linear amplifier, or a Class-AB push-pull af amplifier or modulator. The 8349/4CX35,000C is also useful as a plate and screen modulated Class-C rf amplifier.

The forced-air cooled anode is rated at 35 kilowatts maximum dissipation.

GENERAL CHARACTERISTICS [1]

ELECTRICAL

Filament: Thoriated Tungsten	
Voltage	10.0 V
Current, at 10.0 volts	295 A
Amplification Factor (Average):	
Grid to Screen	4.5
Direct Interelectrode Capacitances (grounded cathode)[2]	
Cin	440 pF
Cout	55 pF
Cgp	2.3 pF
Frequency of Maximum Rating:	
CW	30 MHz

1. Characteristics and operating values are based upon performance tests. These figures may change without notice as the result of additional data or product refinement. EIMAC Division of Varian should be consulted before using this information for final equipment design.
2. Capacitance values are for a cold tube as measured in a special shielded fixture in accordance with Electronic Industries Association Standard RS-191.

MECHANICAL

Maximum Overall Dimensions:	
Length	17.34 in; 440.4 mm
Diameter	9.75 in; 247.7 mm
Net Weight	50 lb; 22.7 kg
Operating Position	Vertical, base up or down
Maximum Operating Temperature:	
Ceramic/Metal Seals	250°C
Anode Core	250°C
Cooling	Forced Air
Base	Special, graduated rings
Recommended Socket	EIMAC SK-1500 Series

(Revised 9-1-75) © 1963, 1967, 1970, 1975 by Varian Printed in U.S.A.

RADIO FREQUENCY LINEAR AMPLIFIER GRID DRIVEN

Class AB

MAXIMUM RATINGS:

DC PLATE VOLTAGE	20,000	VOLTS
DC SCREEN VOLTAGE	2500	VOLTS
DC PLATE CURRENT	15.0	AMPERES
PLATE DISSIPATION	35,000	WATTS
SCREEN DISSIPATION	1750	WATTS
GRID DISSIPATION	500	WATTS

1. Adjust to specified zero-signal dc plate current.
2. Approximate value.

TYPICAL OPERATION (Frequencies to 30 MHz)
Class AB_1, Grid Driven, Peak Envelope or Modulation Crest Conditions

Plate Voltage	15.0	kVdc
Screen Voltage	1.5	kVdc
Grid Voltage[1]	-400	Vdc
Zero-Signal Plate Current	1.0	Adc
Single Tone Plate Current	5.7	Adc
Single-Tone Screen Current[2]	0.9	Adc
Peak rf Grid Voltage[2]	250	v
Peak Driving Power[2]	0	w
Plate Dissipation	30	kW
Plate Output Power	55	kW
Resonant Load Impedance	1280	Ω

RADIO FREQUENCY POWER AMPLIFIER OR OSCILLATOR

Class C Telegraphy or FM
(Key-Down Conditions)

MAXIMUM RATINGS:

DC PLATE VOLTAGE	20,000	VOLTS
DC SCREEN VOLTAGE	2500	VOLTS
DC PLATE CURRENT	15.0	AMPERES
PLATE DISSIPATION	35,000	WATTS
SCREEN DISSIPATION	1750	WATTS
GRID DISSIPATION	500	WATTS

TYPICAL OPERATION (Frequencies to 30 MHz)

Plate Voltage	10.0	15.0	19.0	kVdc
Screen Voltage	750	750	750	Vdc
Grid Voltage	-425	-480	-550	Vdc
Plate Current	7.5	6.8	6.96	Adc
Screen Current[1]	0.84	0.51	0.80	Adc
Grid Current[1]	0.29	0.23	0.35	Adc
Peak rf Grid Voltage[1]	600	660	730	v
Calculated Driving Power[1]	180	150	258	W
Plate Dissipation	19.3	19.0	21.0	kW
Plate Output Power	55.5	82.5	110	kW

1. Approximate value.

PLATE MODULATED RADIO FREQUENCY POWER AMPLIFIER-GRID DRIVEN

Class C Telephony (Carrier Conditions)

MAXIMUM RATINGS:

DC PLATE VOLTAGE	14,000	VOLTS
DC SCREEN VOLTAGE	2000	VOLTS
DC PLATE CURRENT	15.0	AMPERES
PLATE DISSIPATION[1]	23,000	WATTS
SCREEN DISSIPATION[2]	1750	WATTS
GRID DISSIPATION[2]	500	WATTS

1. Corresponds to 35,000 watts at 100% sine-wave modulation.
2. Average, with or without modulation.

TYPICAL OPERATION (Frequencies to 30 MHz)

Plate Voltage	12.0	kVdc
Screen Voltage	750	Vdc
Grid Voltage	-600	Vdc
Plate Current	5.4	Adc
Screen Current[1]	0.52	Adc
Grid Current[1]	0.16	Adc
Peak af Screen Voltage[2] (100% modulation)	500	v
Peak rf Grid Voltage[1]	740	v
Calculated Driving Power	125	W
Plate Dissipation	13.2	kW
Plate Output Power	55.0	kW
Resonant Load Impedance	1120	Ω

1. Approximate value.
2. Approximate value, depending upon degree of driver modulation.

AUDIO FREQUENCY POWER AMPLIFIER OR MODULATOR
Class AB, Grid Driven (Sinusoidal Wave)

MAXIMUM RATINGS (Per Tube):

DC PLATE VOLTAGE	20,000	VOLTS
DC SCREEN VOLTAGE	2,500	VOLTS
DC PLATE CURRENT	15.0	AMPERES
PLATE DISSIPATION	35,000	WATTS
SCREEN DISSIPATION	1750	WATTS
GRID DISSIPATION	500	WATTS

1. Approximate value.

TYPICAL OPERATION (Two Tubes)

Plate Voltage	12.0	kVdc
Screen Voltage	1.5	kVdc
Grid Voltage[1/3]	-400	Vdc
Zero-Signal Plate Current	3.0	Adc
Max Signal Plate Current	9.2	Adc
Max Signal Screen Current[1]	1.8	Adc
Peak af Grid Voltage[2]	280	v
Max Signal Plate Dissipation[2]	20	kW
Plate Output Power	70	kW
Load Resistance (plate to plate)	2860	Ω

2. Per Tube
3. Adjust to give stated zero-signal plate current.

NOTE: TYPICAL OPERATION data are obtained from direct measurement or by calculation from published characteristic curves. Adjustment of the rf grid voltage to obtain the specified plate current at the specified bias, screen and plate voltages is assumed. If this procedure is followed, there will be little variation in output power when the tube is changed, even though there may be some variation in grid and screen current. The grid and screen currents which result when the desired plate current is obtained are incidental and vary from tube to tube. These current variations cause no difficulty so long as the circuit maintains the correct voltage in the presence of the variations in current. In the case of Class C Service, if grid bias is obtained principally by means of a grid resistor, the resistor must be adjustable to obtain the required bias voltage when the correct rf grid voltage is applied.

RANGE VALUES FOR EQUIPMENT DESIGN

	Min.	Max.	
Heater: Current at 10.0 volts	280	310	A
Interelectrode Capacitances (grounded cathode connection)[2]			
Cin	410	470	pF
Cout	50	60	pF
Cgp	1.5	3.2	pF

2. Capacitance values are for a cold tube as measured in a special shielded fixture in accordance with Electronic Industries Association Standard RS-191.

APPLICATION

MECHANICAL

MOUNTING - The 4CX35,000C must be operated with its axis vertical. The base of the tube may be down or up at the convenience of the circuit designer.

SOCKET - The EIMAC sockets, type SK-1500, and SK-1510 have been designed especially for the concentric base terminals of the 4CX35,000C.

COOLING - The maximum temperature rating for the external surfaces of the 4CX35,000C is 250°C. Sufficient forced-air circulation must be provided to keep the temperature of the anode at the base of the cooling fins and the temperature of the ceramic/metal seals below 250°C.

Air-flow requirements to maintain core temperature at 225°C in 40° ambient air are tabulated below (for operation below 30 megahertz.) These data are for air flowing in the base-to-anode direction.

	Base-to-Anode Air Flow			
	Sea Level		10,000 Feet	
Plate Dissipation* (Watts)	Air Flow (CFM)	Pressure Drop(Inches of Water)	Air Flow (CFM)	Pressure Drop(Inches of Water)
15,000	440	1.0	635	1.44
20,000	650	2.0	935	2.9
25,000	975	3.8	1400	5.5
30,000	1300	6.0	1870	8.6
35,000	1760	9.6	2535	13.8

* Since the power dissipated by the filament represents about 3000 watts and since grid-plus-screen dissipation can, under some conditions, represent another 2250 watts, allowance has been made in preparing this tabulation for an additional 5250 watts dissipation.

The blower selected in a given application must be capable of supplying the desired air flow at a back pressure equal to the pressure drop shown above plus any drop encountered in ducts and filters.

Separate cooling of the tube base is required and is accomplished by directing approximately 120 cfm of air horizontally through the socket from the side. It is preferable to direct this air through three equally spaced ducts.

The well in the center of the baseplate of the tube is a critical area which requires cooling to maintain envelope temperatures less than 250°C. For most applications, 1 to 2 CFM of air directed through the center of the socket is sufficient for this purpose.

At other altitudes and ambient temperatures the flow rate must be modified to obtain equivalent cooling. The flow rate and corresponding pressure differential must be determined individually in such cases, using rated maximum temperatures as the criteria for satisfactory cooling.

ELECTRICAL

FILAMENT OPERATION - The peak emission at rated filament voltage of the EIMAC 4CX35,000C is normally many times the peak emission required for communication service. A small decrease in filament temperature due to reduction of filament voltage can increase the life of the 4CX35,000C by a substantial percentage. It is good practice to determine the nominal filament voltage for a particular application that will not affect the operation of the equipment. This is done by measuring some important parameter of performance such as plate current, power output, or distortion while filament voltage is reduced on the 4CX35,000C. At some point in filament voltage there will be a noticeable reduction in plate current, or power output, or an increase in distortion. Operation may be at a filament voltage slightly higher than that point at which performance appears to deteriorate. This voltage should be measured at the socket with a 1% meter and periodically checked to maintain proper operation.

Filament starting current must be limited to a maximum of 900 amperes.

Voltage between filament and the base plates of tube and SK-1500 socket, must not exceed 100 volts.

GRID OPERATION - The 4CX35,000C grid has a maximum dissipation rating of 500 watts. Precautions should be observed to avoid exceeding this rating. The grid bias and driving power should be kept near the values shown in the "Typical Operation" sections of the data sheet whenever possible. The maximum grid circuit resistance should not exceed 100,000 ohms per tube.

SCREEN OPERATION - The power dissipated by the screen of the 4CX35,000C must not exceed 1750 watts.

Screen dissipation, in cases where there is no ac applied to the screen, is the simple product of the screen voltage and the screen current. If the screen voltage is modulated, the screen dissipation will depend upon loading, driving power, and carrier screen voltage.

Screen dissipation is likely to rise to excessive values when the plate voltage, bias voltage, or plate load are removed with filament and screen voltages applied. Suitable protective means must be provided to limit the screen dissipation to 1750 watts in the event of circuit failure.

PLATE DISSIPATION - The plate-dissipation rating for the 4CX35,000C is 35,000 watts. When the 4CX35,000C is operated as a plate-modulated rf amplifier, under carrier conditions, the maximum plate dissipation is 23,000 watts.

INTERELECTRODE CAPACITANCE - The actual internal interelectrode capacitance of a tube is influenced by many variables in most applications, such as stray capacitance to the chassis, capacitance added by the socket used, stray capacitance between tube terminals, and wiring effects. To control the actual capacitance values within the tube, as the key component involved, the industry and the Military Services use a standard test procedure as described in Electronic Industries Association Standard RS-191. This requires the use of specially constructed test fixtures which effectively shield all external tube leads from each other and eliminates any capacitance reading to "ground". The test is performed on a cold tube. Other factors being equal, controlling internal tube capacitance in this way normally assures good interchangeability of tubes over a period of time, even when the tube may be made by different manufacturers. The capacitance values shown in the manufacturer's technical data, or test specifications, normally are taken in accordance with Standard RS-191.

The equipment designer is therefore cautioned to make allowance for the actual capaci-

tance values which will exist in any normal application. Measurements should be taken with the socket and mounting which represent approximate final layout if capacitance values are highly significant in the design.

HIGH VOLTAGE - Normal operating voltages used with the 4CX35,000C are deadly, and the equipment must be designed properly and operating precautions must be followed. Design all equipment so that no one can come in contact with high voltages. All equipment must include safety enclosures for high-voltage circuits and terminals, with interlock switches to open primary circuits of the power supply and to discharge high-voltage condensers whenever access doors are opened. Interlock switches must not be bypassed or "cheated" to allow operation with access doors open. Always remember that HIGH VOLTAGE CAN KILL.

FAULT PROTECTION - In addition to normal cooling airflow interlock and plate and screen over-current interlocks, it is good practice to protect the tube from internal damage which could result from occasional plate arcing at high plate voltage.

In all cases some protective resistance, at least one or two ohms, should be used in series with the tube anode to absorb power supply stored energy in case a plate arc should occur. Where stored energy is high, it is recommended that some form of electronic crowbar be used which will discharge power supply capacitors in as short a time as possible following indication of start of a plate arc.

X-RADIATION - High-vacuum tubes operating at voltages higher than 10 kilovolts produce progressively more dangerous X-ray radiation as the voltage is increased. The 4CX35,000C, operating at its rated voltages and currents, is a potential X-ray hazard. Only limited shielding is afforded by the tube envelope. Moreover, the X-ray radiation level can increase significantly with aging and gradual deterioration, due to leakage paths or emission characteristics as they are affected by the high voltage. X-ray shielding must be provided on all sides of tubes operating at these voltages to provide adequate protection throughout the tube's life. Periodic checks on the X-ray level should be made, and the tube should never be operated without adequate shielding in place when voltages above 10 kilovolts are in use. Lead glass, which attenuates X-rays, is available for viewing windows. If there is any doubt as to the requirement for or the adequacy of shielding, an expert in this field should be contacted to perform an X-ray survey of the equipment.

Operation of high-voltage equipment with interlock switches "cheated" and cabinet doors open in order to be better able to locate an equipment malfunction can result in serious X-ray exposure.

SPECIAL APPLICATIONS - If it is desired to operate this tube under conditions widely different from those given here, write to Power Grid Tube Product Manager, EIMAC Division of Varian, 301 Industrial Way, San Carlos, California 94070 for information and recommendations.

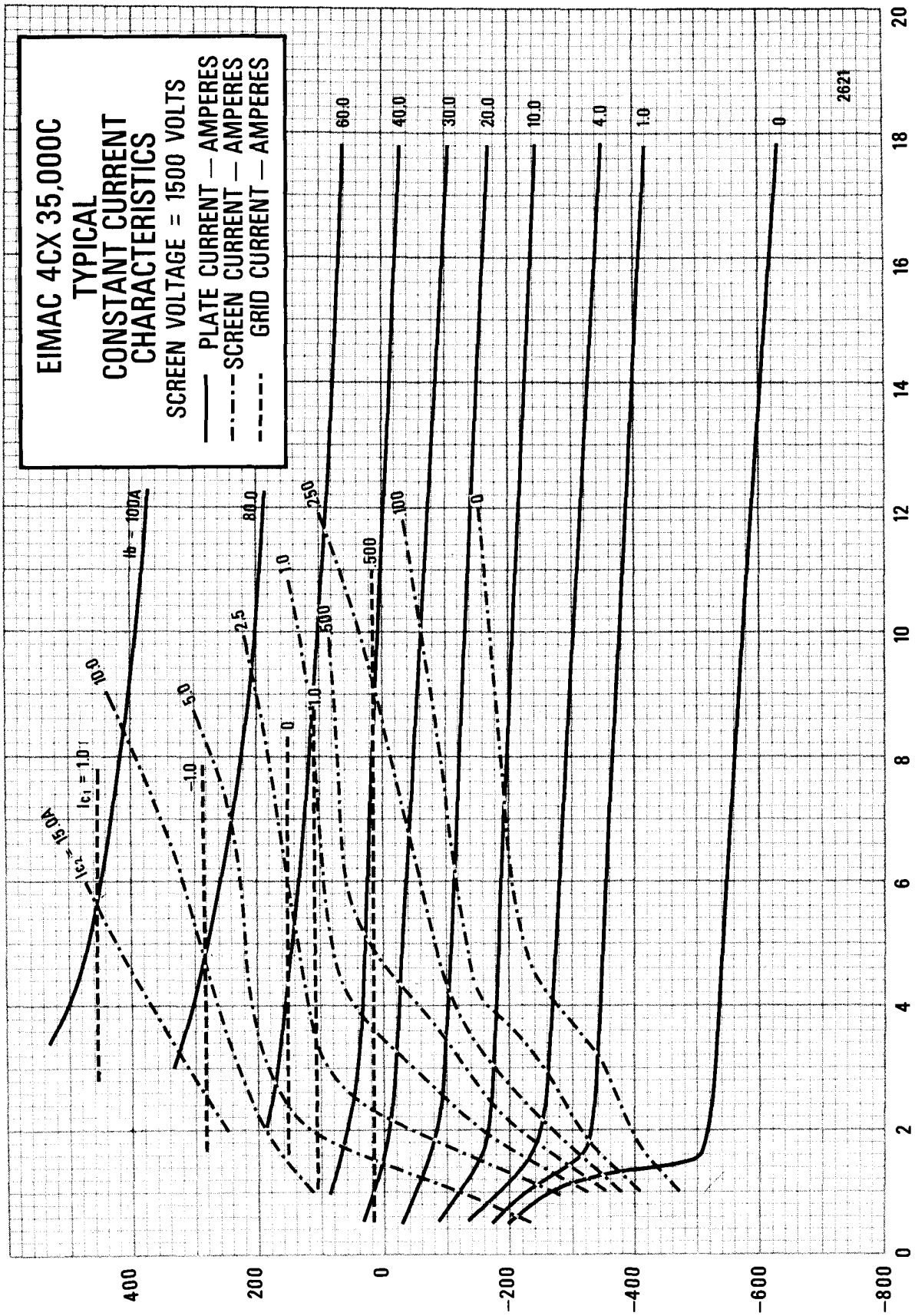
EIMAC 4CX 35,000C
TYPICAL
CONSTANT CURRENT
CHARACTERISTICS
SCREEN VOLTAGE = 1500 VOLTS
PLATE CURRENT — AMPERES
SCREEN CURRENT — AMPERES
GRID CURRENT — AMPERES
Ic2 = 15.0A
Ic1 = 1.0
Ib = 100A
10.0
5.0
-1.0
80.0
2.5
0
1.0
250
500
-500
100
0
60.0
40.0
30.0
20.0
10.0
4.0
1.0
0
2621
PLATE VOLTAGE—KILOVOLTS
GRID VOLTAGE—VOLTS
0
2
4
6
8
10
12
14
16
18
20
400
200
0
-200
-400
-600
-800

#2621

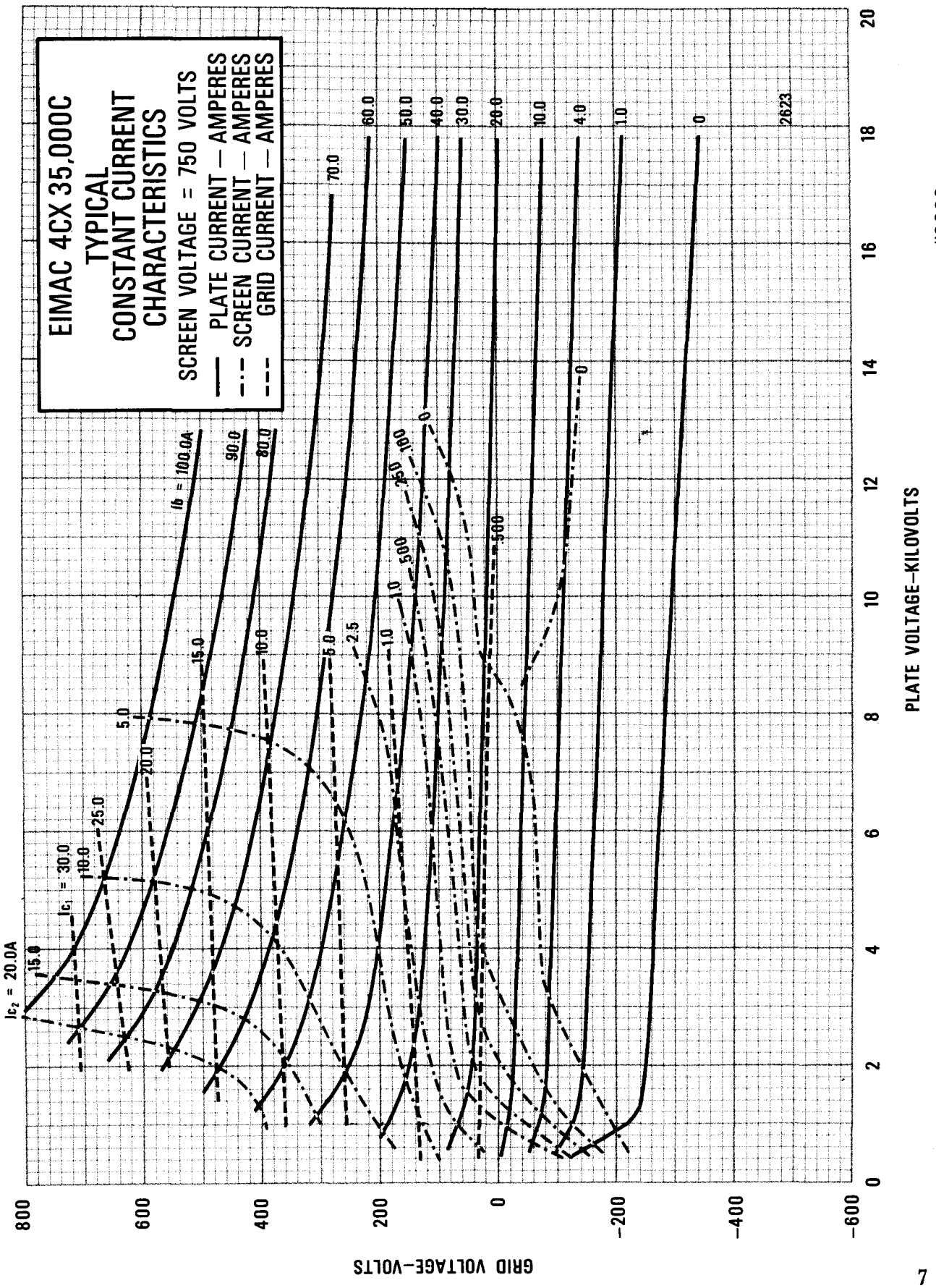
EIMAC 4CX 35,000C
TYPICAL
CONSTANT CURRENT
CHARACTERISTICS
SCREEN VOLTAGE = 750 VOLTS
PLATE CURRENT — AMPERES
SCREEN CURRENT — AMPERES
GRID CURRENT — AMPERES
Ib = 100.0A
90.0
80.0
70.0
60.0
50.0
40.0
30.0
20.0
10.0
4.0
1.0
0
2623
Ic2 = 20.0A
Ic1 = 30.0
15.0
10.0
25.0
20.0
15.0
10.0
5.0
2.5
1.0
500
250
100
0
GRID VOLTAGE—VOLTS
PLATE VOLTAGE—KILOVOLTS

#2623

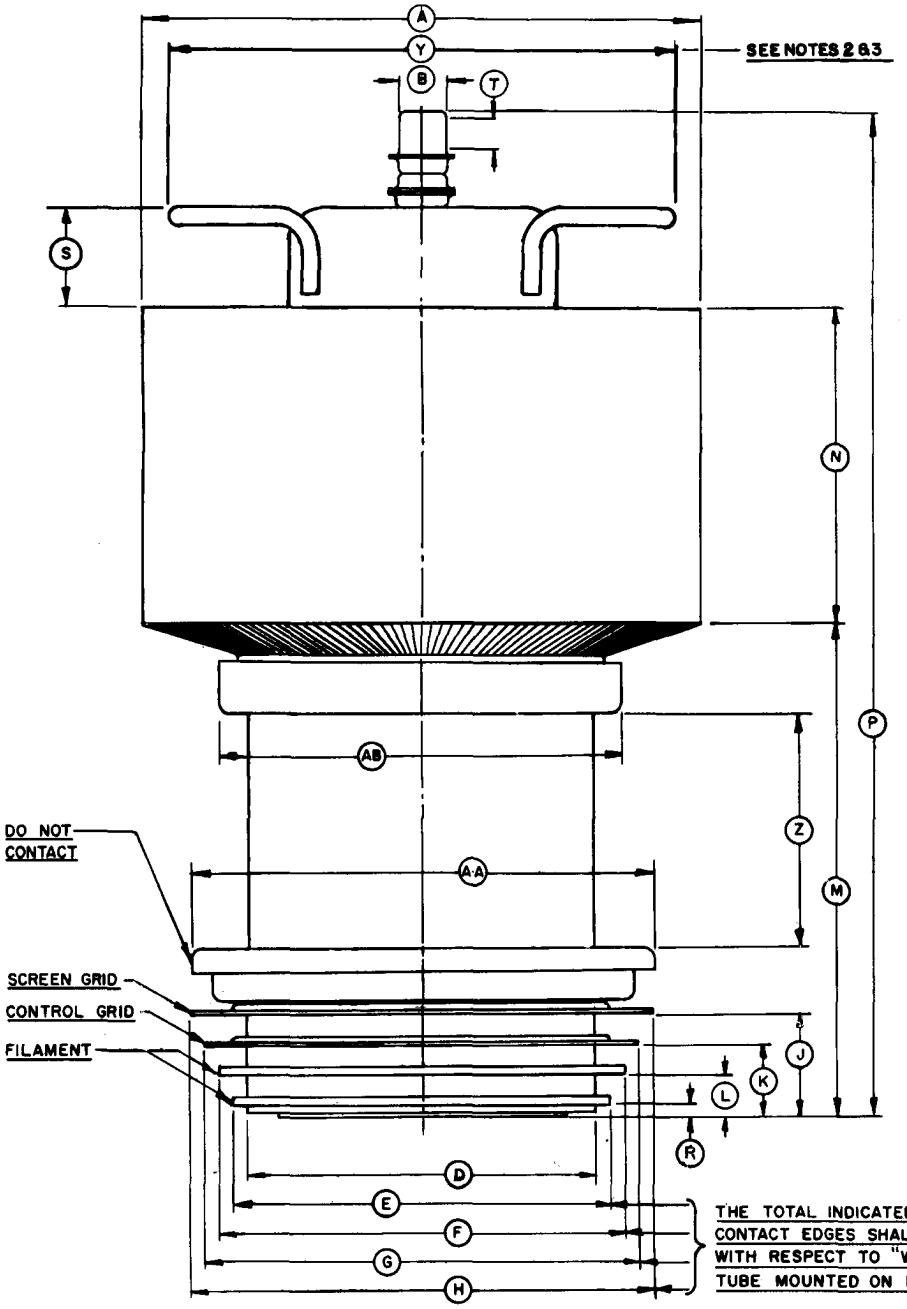

DIMENSIONAL DATA				
DIM.	INCHES		MILLIMETERS	
	MIN.	MAX.	MIN.	MAX.
A	9.500	9.750	241.30	247.65
B	0.860	0.890	21.84	22.60
D	5.980	6.020	151.89	152.91
E	6.510	6.560	165.35	166.62
F	6.980	7.020	177.29	178.31
G	7.480	7.520	189.99	191.01
H	7.975	8.015	202.57	203.58
J	1.750	1.800	44.45	45.72
K	1.220	1.270	30.99	32.26
L	0.690	0.740	17.53	18.80
M	8.442	8.692	214.43	220.78
N	5.375	5.625	136.52	142.88
P	17.070	17.340	433.58	440.44
R	0.173	0.213	4.40	5.41
S	1.750		44.45	
T	0.485	0.515	12.32	13.08
V	— —	0.135	— —	3.43
W	1.250	1.270	31.75	32.26
X	0.490	0.530	12.45	13.46
Y	— —	8.750	— —	222.25
Z	3.750		95.25	
AA	8.000		203.20	
AB	6.875		174.63	

NOTES:
1. REFERENCE DIMENSIONS ARE FOR INFORMATION ONLY AND ARE NOT REQUIRED FOR INSPECTION PURPOSES.
2. DIM. Y IS MAXIMUM DIA. ACROSS CORNERS
3. HANDLE LATERAL AXIS ORIENTATION WITH BASE LOCK PIN IS AS SHOWN.

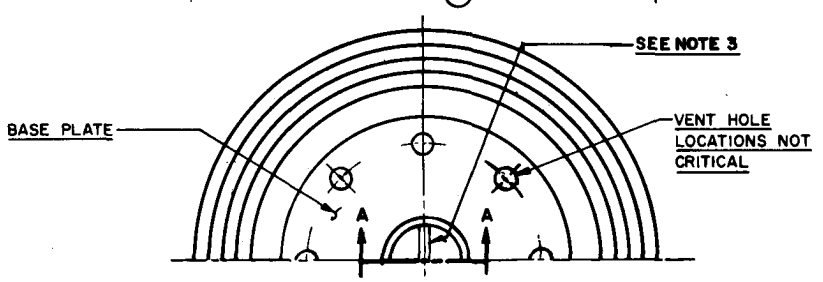

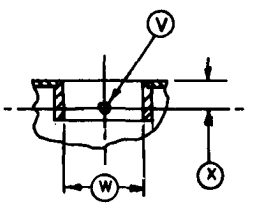

SECTION A–A