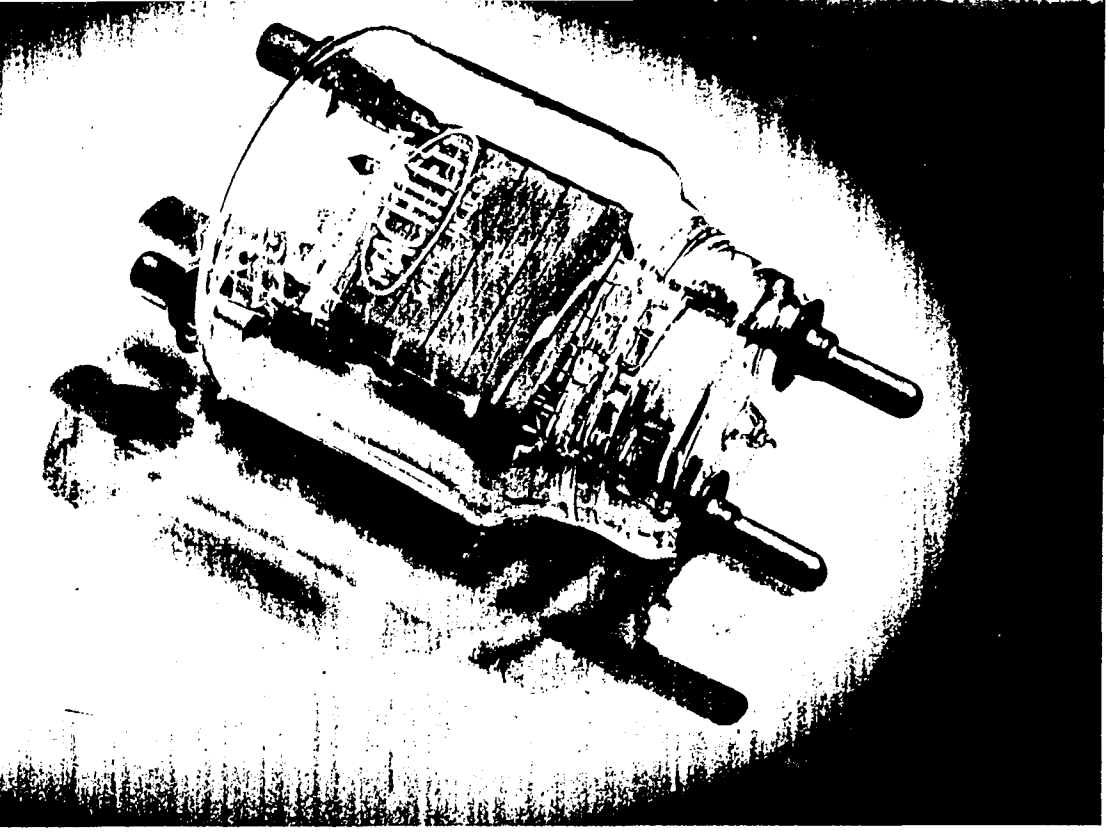

MACHLETT

ML-833A

DESCRIPTION & RATINGS

DESCRIPTION

The ML-833-A is a three-electrode tube designed for use as a modulator, amplifier, or oscillator in radio transmitting service. It provides exceptional plate efficiency with low driving power due to special features which include high perveance and minimized internal lead inductance. The cathode is a thoriated tungsten filament. The tube is convection or forced-air cooled and is capable of dissipating 450 watts. Maximum ratings of 4.0 kVdc and 2.0 kW plate input with forced-air cooling apply at frequencies up to 20 mc/sec; operation at 100 mc/sec is permissible with reduced voltage and input ratings.

The ML-833-A embodies the highest standards for this tube type, all parts being thoroughly processed to assure efficient operation and long life.

GENERAL CHARACTERISTICS

Electrical	Minimum	Bogey	Maximum	
Filament Voltage		10.0		Volts
Filament Current at Bogey Voltage	9.4	10.0	10.6	Amps
Filament Starting Current	—	—	20.0	Amps
Amplification Factor:				
I_b = 200 mAdc, E_c = -25 volts	31.5	35.0	38.5	
Interelectrode Capacitances:				
Grid-Plate	5.5	6.3	7.1	uuf
Grid-Filament	10.1	12.3	14.5	uuf
Plate-Filament	6.4	8.5	10.6	uuf

Mechanical

Mounting Position—Vertical, with filament terminals up or down; or horizontal, with plate in a vertical plane.

Type of Cooling—Convection or Forced Air

Maximum Incoming Air Temperature	45	°C
Required Air-Flow (for Forced-Air Cooling) On center of bulb between grid and plate seals from 2" diameter nozzle.	40	cfm
Maximum Glass Temperature (between grid and plate seals)	145	°C
Net Weight	1	lb.

MAXIMUM RATINGS AND TYPICAL OPERATING CONDITIONS

A-F Power Amplifier & Modulator Class B

Maximum Ratings, Absolute Values

	Convection Cooling	Forced-Air Cooling		
	CCS	CCS	ICAS	
D-C Plate Voltage	3000	4000	4000	volts
Signal D-C Plate Current*	500	500	500	ma.
Signal Plate Input*	1125	1600	1800	watts
Plate Dissipation*	300	400	450	watts

Typical Operation

Unless otherwise specified, values are for 2 tubes

	Convection Cooling	Forced-Air Cooling		
D-C Plate Voltage	3000	4000	4000	volts
D-C Grid Voltage†	−70	−100	−100	volts
Peak A-F Grid-to-Grid Voltage	400	480	510	volts
Zero-Signal D-C Plate Current	100	100	100	ma.
Max. Signal D-C Plate Current	750	800	900	ma.
Effective Load Resistance, plate to plate	9500	12000	11000	ohms
Max.-Signal Driving Power, approx.	20	29	38	watts
Max.-Signal Power Output, approx.	1650	2400	2700	watts

* Averaged over any audio-frequency cycle of sine-wave form.
† For a-c filament supply
CCS—Continuous Commercial Service.
ICAS—Intermittent Commercial and Amateur Service.

R-F Power Amplifier—Class B Telephony

Carrier conditions per tube for use with a maximum modulating factor of 1.0.

Maximum Ratings, Absolute Values

	Convection Cooling	Forced-Air Cooling		
	CCS	CCS	ICAS	
D-C Plate Voltage	3000	4000	4000	volts
D-C Plate Current	300	300	300	ma.
Plate Input	450	600	675	watts
Plate Dissipation	300	400	450	watts

Typical Operation

	Convection Cooling	Forced-Air Cooling		
D-C Plate Voltage	3000	4000	4000	volts
D-C Grid Voltage†	−70	−120	−120	volts
Peak R-F Grid Voltage	90	120	130	volts
D-C Plate Current	150	150	150	ma.
D-C Grid Current, approx.	2	2	3	ma.
Driving Power, approx.*	10	14	21	watts
Power Output, approx.	150	225	250	watts

* At crest of a-f cycle with modulation factor of 1.0.
† For a-c filament supply.

Plate-Modulated R-F Power Amplifier Class C Telephony

Carrier conditions per tube for use with a maximum modulation factor of 1.0.

Maximum Ratings, Absolute Values

	Convection Cooling	Forced-Air Cooling		
	CCS	CCS	ICAS	
D-C. Plate Voltage	2500	3000	4000	volts
D-C Grid Voltage	−500	−500	−500	volts
D-C Plate Current	400	450	450	ma.
D-C Grid Current	100	100	100	ma.
Plate Input	835	1250	1800	watts
Plate Dissipation	200	270	350	watts

Typical Operation

	Convection Cooling	Forced-Air Cooling		
D-C Plate Voltage	2500	3000	4000	volts
D-C Grid Voltage*	−300	−300	−325	volts
	4000	3600	3600	ohms
Peak R-F Grid Voltage	460	490	520	volts
D-C Plate Current	335	415	450	ma.
D-C Grid Current, approx.	75	85	90	ma.
Driving Power, approx.	30	37	42	watts
Power Output, approx.	635	1000	1500	watts

* Obtained by grid resistor of value shown or by partial self-bias methods.

R-F Power & Oscillator—Class C Telegraphy

Key-down conditions per tube without modulation†

Maximum Ratings, Absolute Values

	Convection Cooling	Forced-Air Cooling		
	CCS	CCS	ICAS	
D-C Plate Voltage	3000	4000	4000	volts
D-C Grid Voltage	−500	−500	−500	volts
D-C Plate Current	500	500	500	ma.
D-C Grid Current	100	100	100	ma.
Plate Input	1250	1800	2000	watts
Plate Dissipation	300	400	450	watts

Typical Operation

	Convection Cooling	Forced-Air Cooling		
D-C Plate Voltage	3000	4000	4000	volts
D-C Grid Voltage*	−200	−200	−225	volts
	3500	2650	2400	ohms
	425	380	380	ohms
Peak R-F Grid Voltage	360	375	415	volts
D-C Plate Current	415	450	500	ma.
D-C Grid Current, approx.	55	75	95	ma.
Driving Power, approx.	20	26	35	watts
Power Output, approx.	1000	1440	1600	watts

* Obtained from fixed supply, by grid resistor (3500, 2650, 2400) or by cathode resistor (425, 380, 380).

† Modulation essentially negative may be used if the positive peak of the audio-frequency envelope does not exceed 115% of the carrier conditions.

MAXIMUM FREQUENCY RATINGS

The ML-833-A can be operated at full ratings for convection cooling at frequencies up to 30 mc/sec. and full ratings for forced-air cooling at frequencies up to 20 mc/sec. Maximum values of plate voltage and power input for operation at higher frequencies are determined by the percentage factors tabulated below, other maximum ratings being the same as shown in the above section. At high frequencies special attention should be given to adequate ventilation of the bulb.

	Convection Cooling			Forced-Air Cooling			
Frequency	30	50	75	20	50	75	megacycles
Percentage of Maximum Rated Plate Voltage and Plate Input							
Class B, r-f	100	98	94	100	97	93	per cent
Class C, plate-modulated	100	90	72	100	83	65	per cent
Class C, unmodulated	100	90	72	100	83	65	per cent

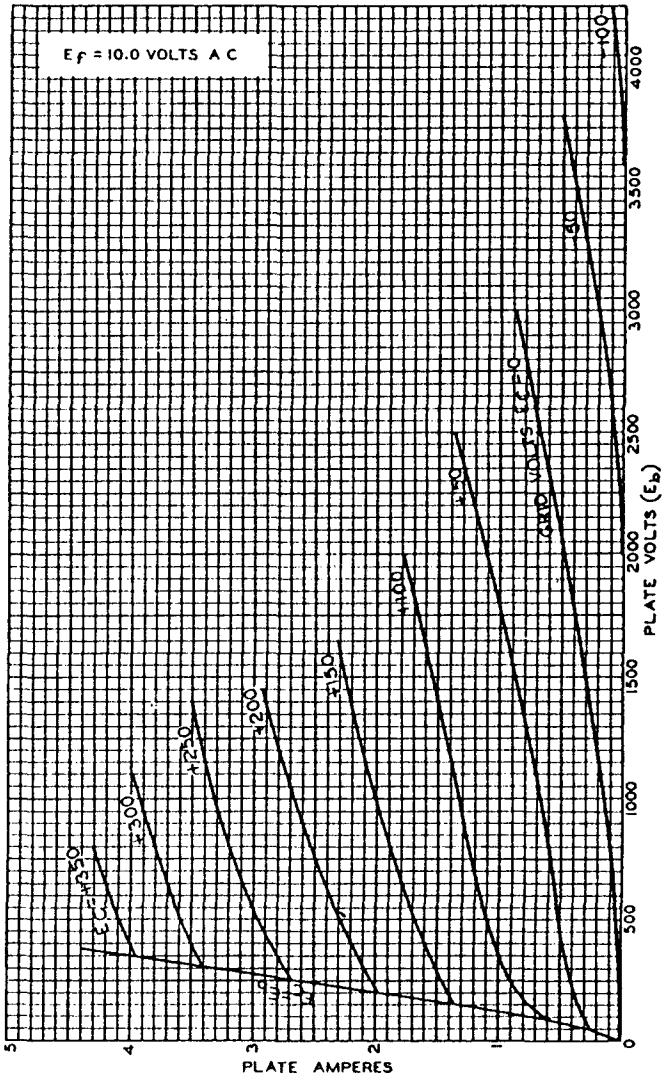

AVERAGE PLATE CHARACTERISTICS

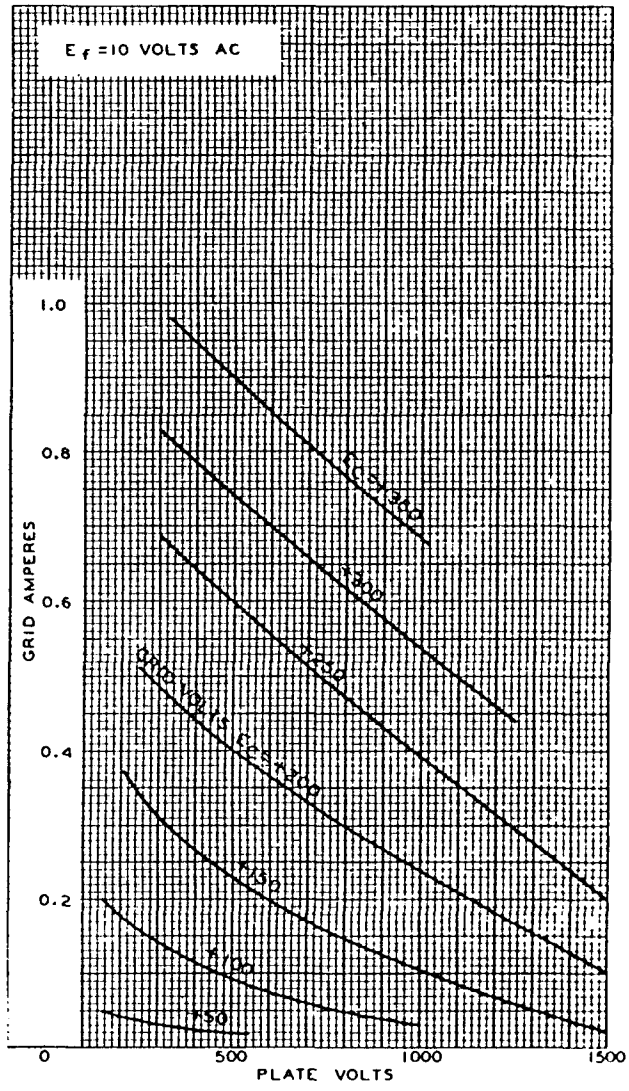

TYPICAL CHARACTERISTICS

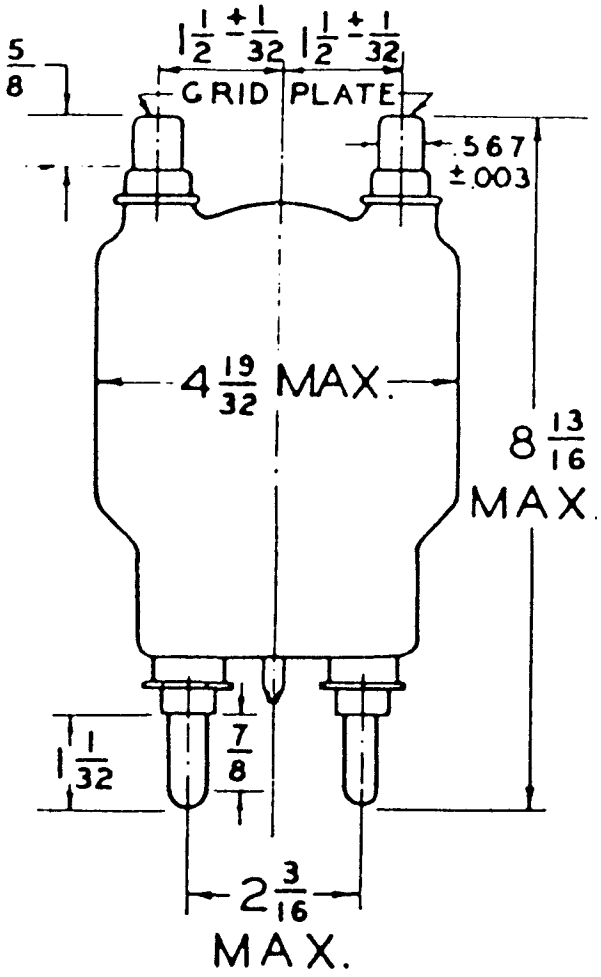

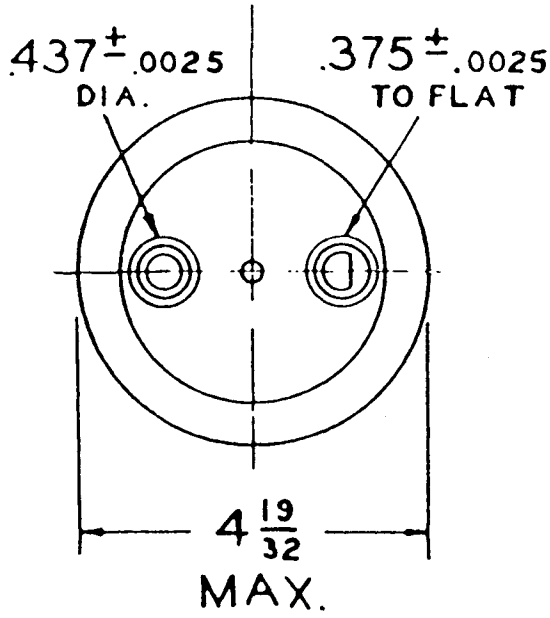

DIMENSIONS—ML-833 A