SPECIAL VALVES

Radiation Cooled Triode

Code: 833A (CV635)

This is a high mu triode particularly suitable for use as a r.f. power amplifier, oscillator or Class B modulator. The special construction of the valve makes it exceptionally efficient at the higher radio frequencies. It can be operated under Class C C.W. conditions with a maximum input of 1·8 kW at frequencies up to 30 Mc/s with forced-air-cooling. At reduced input ratings the valve may be operated up to 75 Mc/s.

CATHODE

Thoriated tungsten filament		
Filament voltage	10	V
Filament current	10	A
Maximum usable emission	3	A

CHARACTERISTICS

Amplification factor	At $V_g = -10V$, $I_a = 200mA$	35	
Mutual conductance	At $V_g = -10V$, $I_a = 200mA$	4	mA/V

DIRECT INTERELECTRODE CAPACITANCES

Grid to anode	6·3	pF
Grid to filament	12·3	pF
Anode to filament	8·5	pF

MECHANICAL DATA

Dimensions	As shown in outline drawing			
Mounting position	Vertical			
Net weight		1·5 lb	545	g

COOLING

The maximum temperature of the anode and grid seals must not exceed 145°C.

When forced-air-cooling is required, an air flow of 40ft³/min (1,13m³/min) should be directed through a 2-inch (50,8mm) nozzle on to the bulb between the anode and grid seals.

Standard Telephones and Cables Limited
Valve Division, Brixham Road, Paignton, Devon
Telephone: Paignton 50762 Telex: 4230
London Sales Office, Telephone: Footscray 3333 Telex: 21836
C O M P O N E N T S G R O U P

STC

Code: 833A (CV635)

CONTINUED.

MAXIMUM RATINGS AND TYPICAL OPERATING CONDITIONS

AUDIO FREQUENCY

Class B. A.F. Power Amplifier or Modulator
(For balanced two-valve operation)

Maximum Ratings

	Natural Cooling	Forced Cooling	
Maximum direct anode voltage	3	4	kV
Maximum direct anode current	500	500	mA
Maximum anode input power	1 125	1 600	W
Maximum anode dissipation	300	400	W

Typical Operating Conditions

Direct anode voltage	3	4	kV
Direct anode current, zero signal	2×50	2×50	mA
Direct anode current, maximum signal	2×375	2×400	mA
Direct grid voltage	−70	−100	V
A.F. grid-to-grid r.m.s. voltage	280	340	V
Effective load resistance (a-a)	9·5	12	kΩ
Drive power, maximum signal, approx.	20	29	W
Output power	1·65	2·4	kW

RADIO FREQUENCY

Class C. R.F. Power Amplifier or Oscillator. Unmodulated

Maximum Ratings

	Natural Cooling	Forced Cooling	
Maximum direct anode voltage	3	4	kV
Maximum direct anode current	500	500	mA
Maximum direct grid voltage	−500	−500	V
Maximum grid resistor	15	15	kΩ
Maximum direct grid current, approx.	100	100	mA
Maximum grid dissipation	20	20	W
Maximum anode input power	1·25	1·8	kW
Maximum anode dissipation	300	400	W

Typical Operating Conditions

Direct anode voltage	3	4	kV
Direct anode current	415	450	mA
Direct grid voltage	−200	−200	V
Grid resistor	3·6	2·65	kΩ
Direct grid current, approx*	55	75	mA
Peak r.f. grid voltage	360	375	V
Input (drive) power, approx.	20	26	W
Direct anode dissipation	245	360	W
Output power	1	1·44	kW
Power into load at 85% transfer	0·85	1·22	kW

*Subject to wide variations dependent upon impedance of the load circuit.

Code: 833A (CV635)

CONTINUED

Class C. R.F. Power Amplifier or Oscillator. Anode Modulated
(Carrier conditions per valve for use with 100% modulation)

Maximum Ratings

	Natural Cooling	Forced Cooling	
Maximum direct anode voltage	2·5	3	kV
Maximum direct anode current	400	450	mA
Maximum direct grid voltage	−500	−500	V
Maximum grid resistor	15	15	kΩ
Maximum grid dissipation	20	20	W
Maximum direct grid current, approx.	100	100	mA
Maximum anode input power	835	1 250	W
Maximum anode dissipation	200	270	W

Typical Operating Conditions

Direct anode voltage	2·5	3	kV
Direct anode current	335	415	mA
Direct grid voltage	−300	−300	V
Grid resistor	4	3·6	kΩ
Peak r.f. grid voltage	460	490	V
Direct grid current*	75	85	mA
Grid drive power, approx.	30	37	W
Anode dissipation	200	245	W
Output power	635	1 000	W
Power into load†	540	850	W

*Subject to wide variations dependent upon impedance of the load circuit.
†Transfer efficiency 85%.

STC

Code: 833A (CV635)

CONTINUED

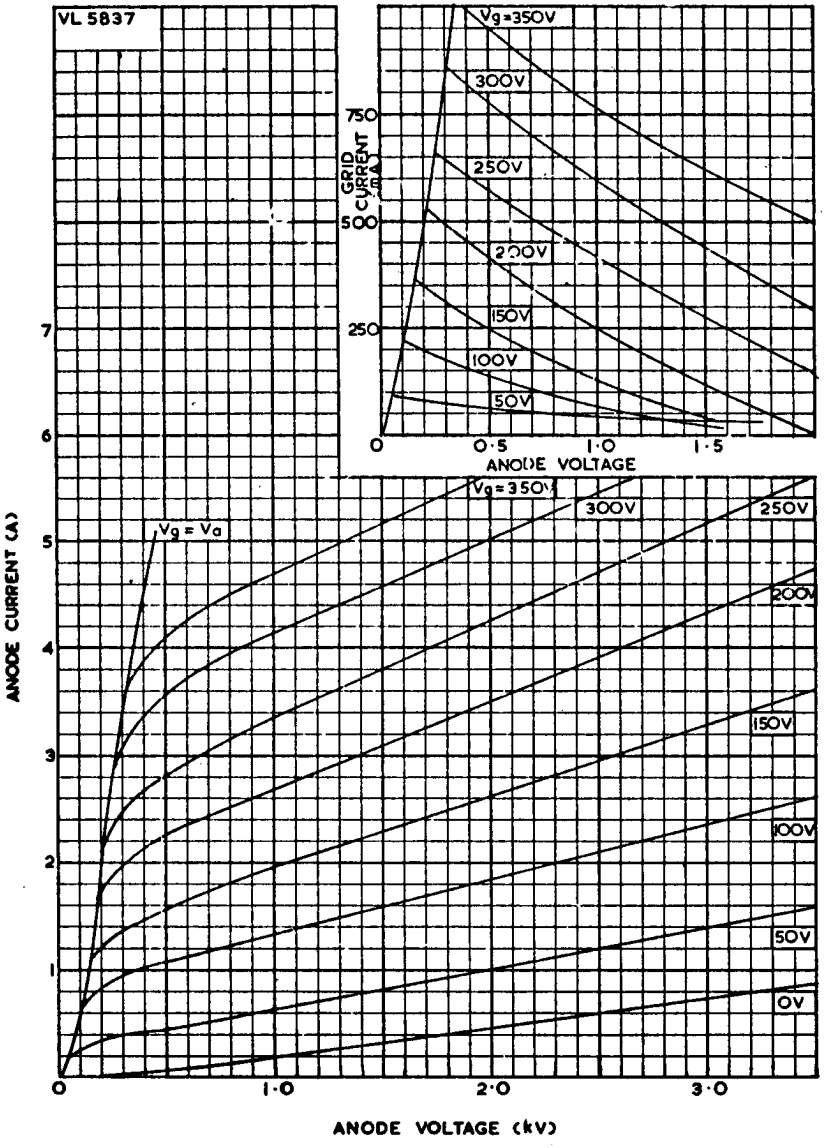

Code: 833A (CV635)

CONTINUED

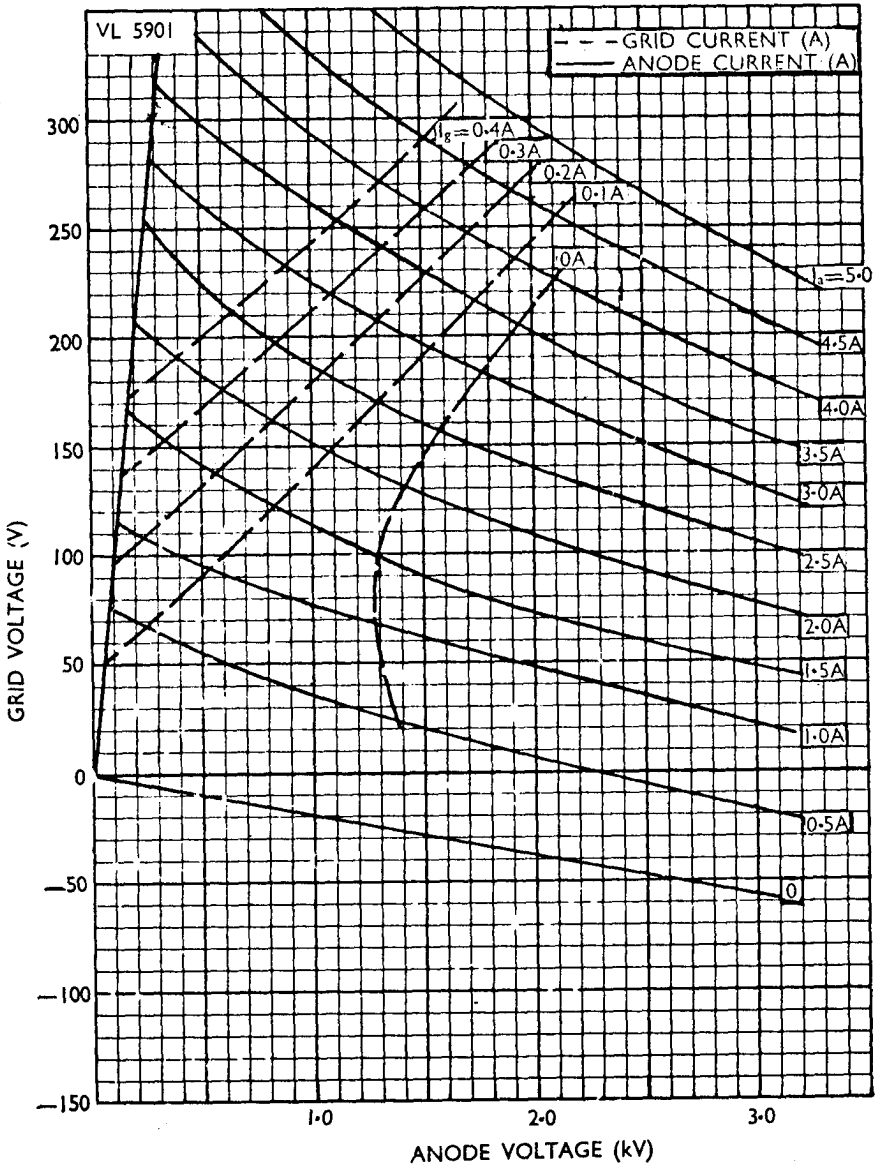

STC

Code: 833A (CV635)

CONTINUED

833A Outline

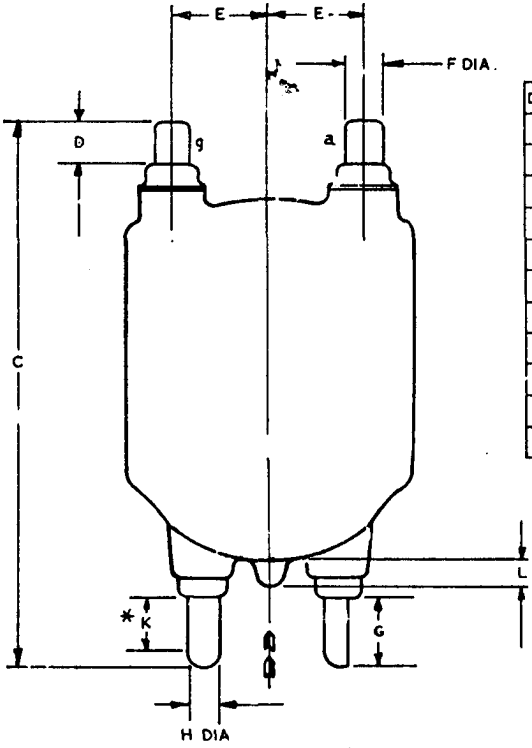

DIM.	INCHES	MILLIMETRES
A	$4\,^{19}/_{32}$ MAX.	116,7 MAX.
B	0·375 ± 0·005	9,53 ± 0,13
C	$8\,^{5}/_{8}$ ± $^{3}/_{16}$	219,1 ± 4,8
D	0·610 MIN.	15,49 MIN.
E	$1\,^{1}/_{2}$ ± $^{1}/_{32}$	38,1 ± 0,8
F	0·567 ± 0·005	14,40 ± 0,13
G	$1\,^{3}/_{32}$ ± $^{1}/_{32}$	27,8 ± 0,8
H	0·437 ± 0·005	11,11 ± 0,13
J	$2\,^{1}/_{8}$ ± $^{1}/_{16}$	54,0 ± 1,6
K	$^{27}/_{32}$ MIN.	21,4 MIN.
L	$^{1}/_{2}$ MAX.	12,7 MAX.

BASIC DIMENSIONS ARE INCHES

* DENOTES:- CONTACT LENGTH

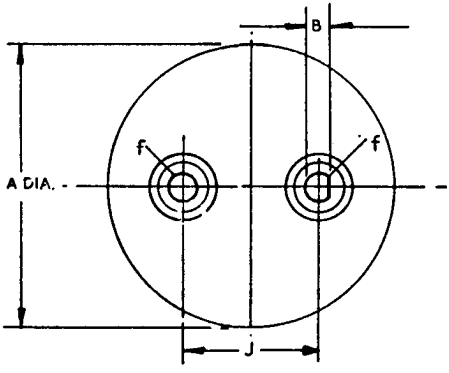

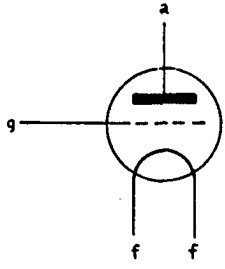

© 1967 Standard Telephones and Cables Limited