# REFLEX KLYSTRON

(MECHANICALLY TUNED)

## DESCRIPTION

The 8294 (Bendix Type TK-110) is a ruggedized, low voltage, mechanically tuned, X-band reflex klystron designed for use as a CW oscillator over the frequency range of 8.5 to 9.66 Gc/sec.

Although different in design and physical appearance, the 8294 is an exact electrical and mechanical retrofit for the 2K25 and has equivalent or superior performance in all operating characteristics. It may be used interchangeably in existing 2K25 sockets with no equipment modification.

Of particular interest is the mechanical tuner design. As with the 2K25, tuning is accomplished by rotation of the drive nut located in the center of the tuner bows. However, unlike the 2K25, this motion is transmitted to the resonant cavity through a highly flexible diaphragm in the wall of the vacuum envelope, and there is no overstressing of the structure. Mechanical stops at both extremes of the tuning range prevent accidental damage to the structure by exceeding the mechanical tuning range. This design approach results in greatly extended tuning life, ability to operate in applications requiring repetitive tuning, low temperature coefficient, reduced frequency variation with changes in ambient pressure, and minimal mechanical tuning hysteresis (repeatability of frequency vs. tuner setting).

The coaxial output of the tube is coupled into a standard 1" x ½" waveguide through a transducer, or launching section, such as that defined by Military Drawing 227-JAN or equivalent. The use of teflon as the coaxial insulator eliminates insulator breakage and removes the limitation on maximum coaxial line ambient temperature when using polystyrene.

A detailed description of the 8294 design features is available in Bendix Engineering Data Release Issue 44, File No. M-9.

## APPLICATION NOTES

Cooling: Convection cooling is normally sufficient. If the tube is to be operated in a small enclosure, care should be taken to insure adequate ventilation to prevent excessive bulb temperature that will decrease the normal life of the tube.

Output Load: The tube has been designed for operation into a matched load. When operation into a reactive load is necessary, adequate attenuation should be inserted between the load and the tube to limit the SWR at the tube and thus prevent impairment of performance.

Repeller Modes: The tube is designed for optimum operation in the repeller voltage mode defined in this data sheet, however, other modes exist at other repeller voltages and these may be used when desired. In design of AFC circuits these other modes must be considered to assure lock-in on the desired mode.

Safety Precautions: (1) Repeller voltage must always be negative, relative to the cathode. (2) Bulb should be at ground potential whenever the application permits. (3) Resonator voltage should not be applied without repeller voltage.

## MAXIMUM RATINGS

(ABSOLUTE VALUES)

| | |
|---|---|
| Resonator Voltage | 350 Vdc |
| Reflector Voltage | −350 Vdc |
| Filament Voltage | 6.3V ± 8% |
| Cathode Current | 37 ma D.C. |
| Heater-Cathode Voltage | 100 Vdc |

## PHYSICAL CHARACTERISTICS

| | |
|---|---|
| Dimensions: | Refer to outline drawing |
| Base: | Fits standard octal socket with #4 pin enlarged to 3/16" |
| Coupling to Waveguide: | Coaxial output fits standard 227-JAN tube mount or equivalent |
| Cooling: | Convection |
| Mounting Position: | Any |
| Cavity: | Integral |
| Bulb: | Metal |

THE Bendix CORPORATION
Red Bank DIVISION, EATONTOWN, NEW JERSEY

Publication No. RT41-25 from JEDEC release #4684, April 27, 1964 Printed in U.S.A.

## ELECTRICAL CHARACTERISTICS & TEST CONDITIONS

**Test Conditions and Specification Limits**

| TEST | CONDITIONS | SYMBOL | LIMITS | | UNITS |
|---|---|---|---|---|---|
| PRODUCTION TESTS: | | | Min. | Max. | |
| Cathode Current | | Ik | - | 32 | mAdc |
| Change in Cathode Current | Ef=6.3 to 5.8V; t = 120; | ΔIk/Ik | - | 10 | % |
| Power Output(1) | Er/(Mode A) Max Po; F =8500 to 9660 Mc | Po | 20 | - | mW |
| Reflector Voltage(1): | Mode A; F =9660 ±0.3% Mc | Er | -143 | -200 | Vdc |
| Mode Continuity | Er/Max Po; σ 8db (min); | - | - | - | - |
| Total Reflector Current | Er = −150 Vdc | Ir | - | 7.0 | μAdc |
| Reflector Lkg. Current: | Er = −150 Vdc | Ir | - | 5.0 | μAdc |
| Reflector Gas Current: | Er = −150 Vdc | Ir | - | 2.0 | μAdc |
| Dimensions: | See Outline Drawing | | | | |
| **DESIGN TESTS:** | | | | | |
| Heater Cathode Lkg. | Ehk = ± 45Vdc | Ihk: | - | 100 | μAdc |
| Heater Current | Ef = 6.3V. | If | 410 | 470 | mA |
| Insulation of Electrodes: | 300Vdc; Tube Cold | Rkrs: | 2.0 | - | Megs |
| | | Rhrs: | 2.0 | - | Megs |
| Power Output (2) | Er/(Mode B); F = 9370Mc ± 0.3% | Po: | 15 | - | mW |
| Bump | Er/Max Po (Mode A) | ΔPo/Po | - | ± 10 | % |
| Reflector Voltage (3): | Mode B; F = 9370Mc ± 0.3% | Er | -75 | -120 | Vdc |
| Electronic Tuning (1): | Mode A; 50% Max Po; F = 9370Mc ±0.3% | ΔF | 35 | - | Mc |
| Electronic Tuning (2): | Mode A; 2.5% of max Po; F = 9370Mc ±0.3% | ΔF | - | 145 | Mc |
| Hysteresis: (1) | Er/Max Po | Ratio | - | .25 | - |

COMPARISON OF SPECIFIED* OPERATING CHARACTERISTICS AND ABSOLUTE MAXIMUM RATINGS TYPE 8294 AND 2K25

| | | 8294 | | 2K25 | |
|---|---|---|---|---|---|
| RATING | UNITS | MIN | MAX | MIN | MAX |
| Heater-Cathode Voltage | Vdc | - | 100 | - | 50 |
| Altitude | Feet | - | 50,000 | - | 10,000 |
| TEST | | | | | |
| Power Output (3) | mW | 5 | - | 3 | - |
| Electronic Tuning (3) | Mc | 35 | - | 28 | - |
| Temperature Coefficient | Mc/°C | 0.00 | 0.10 | 0.00 | 0.20 |
| Tuner Mechanical Fatique | Cycles | 10,000 | - | NOT SPECIFIED | |
| Life Test | Hours | 1000 | - | 500 | - |
| Life Test End Point | mW | 15 | - | 10 | - |

*2K25 Specification MIL-E-1/982 dated 18 June 1957
8294 Specification Bendix TS-TK-110 dated 15 August 1963
NOTE: All other specification parameters identical for both tubes.

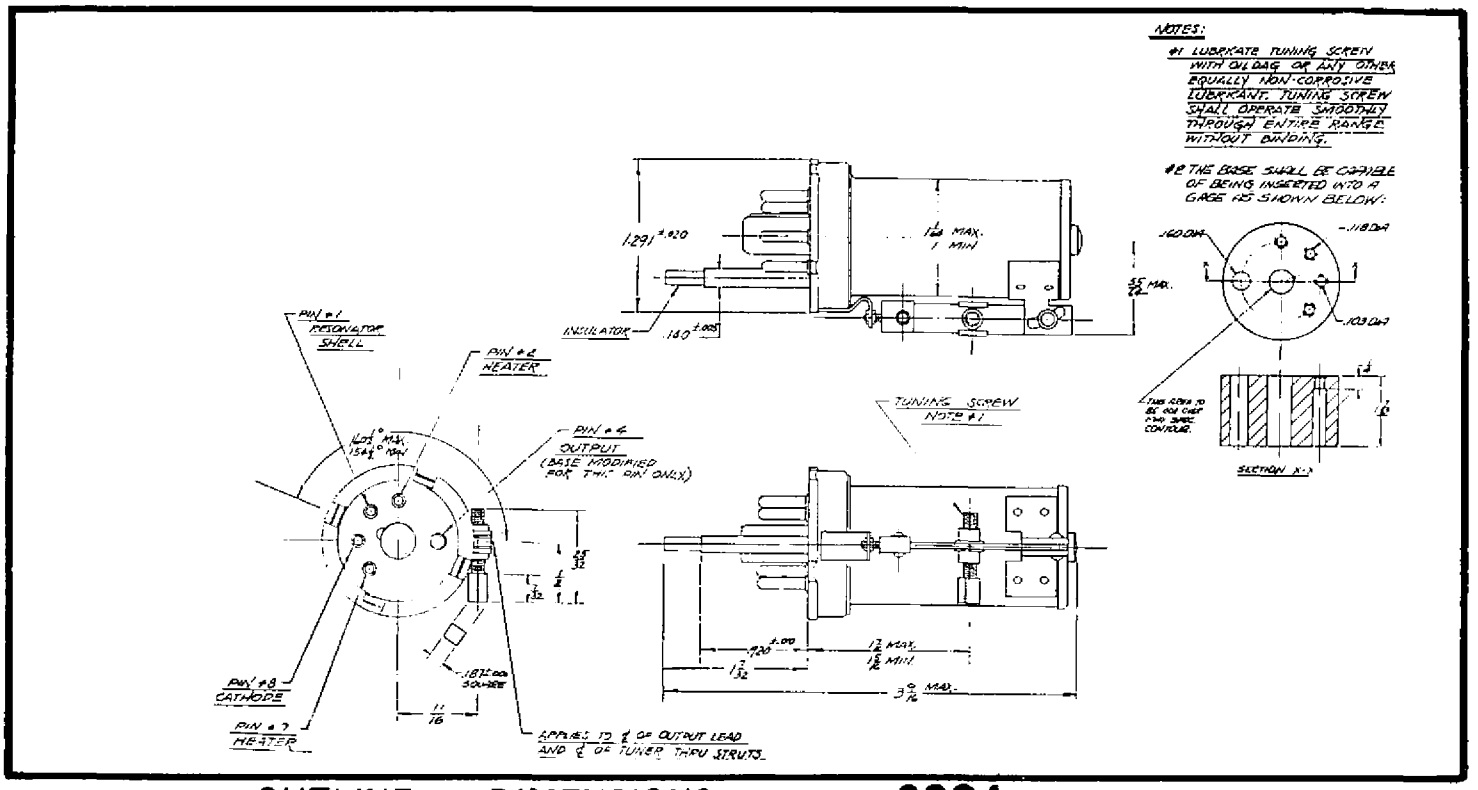


OUTLINE DIMENSIONS — **8294**

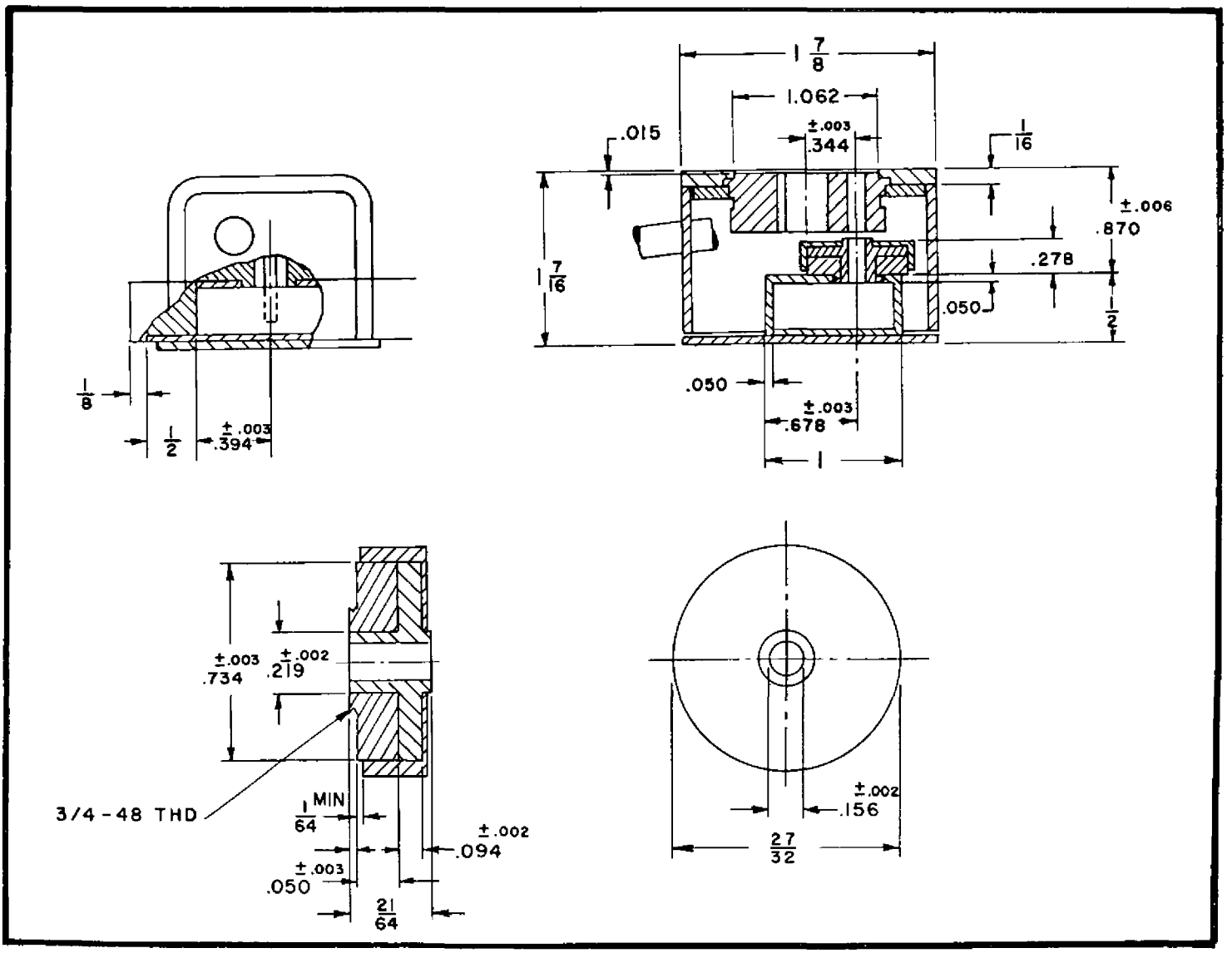


BROADBAND COAX TO WAVEGUIDE TRANSDUCER

# REFLEX KLYSTRON
(MECHANICALLY TUNED)

**8294**

Bendix Red Bank Type TK-110

## AVERAGE CHARACTERISTICS

POWER OUTPUT AND FREQUENCY
VS REPELLER VOLTAGE

**8294**

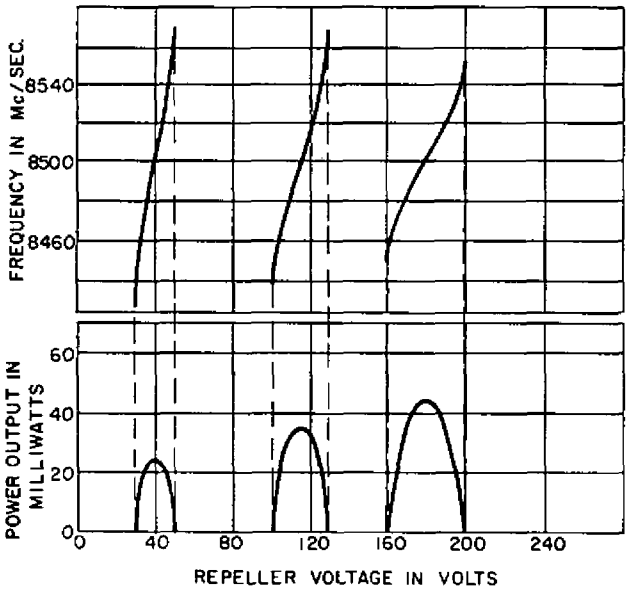


POWER OUTPUT AND FREQUENCY
VS REPELLER VOLTAGE

**8294**

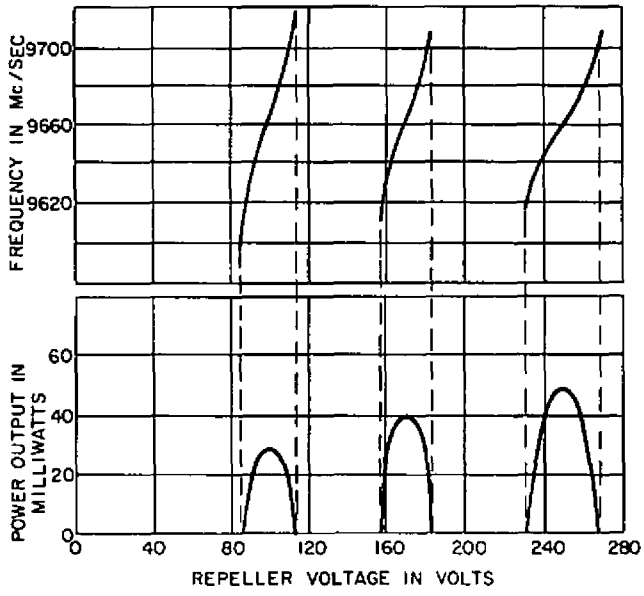


COMPARATIVE
FREQUENCY CHANGE
VS AMBIENT TEMPERATURE
(MEASUREMENT MADE AT 9370 Mc/SEC)

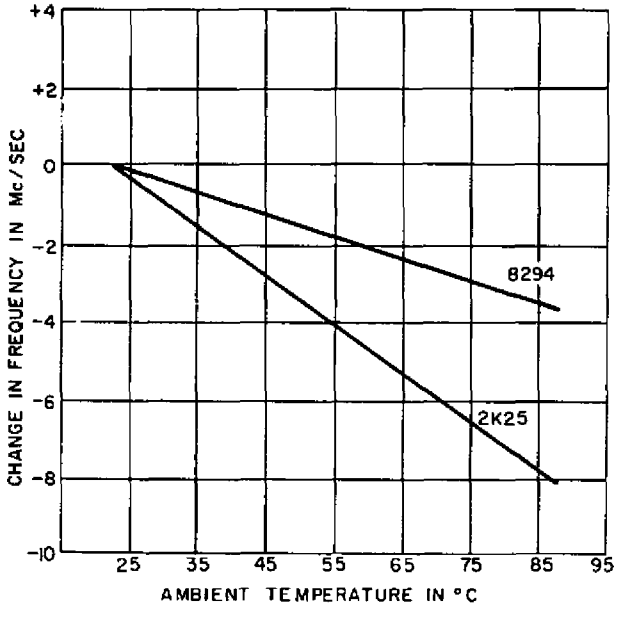

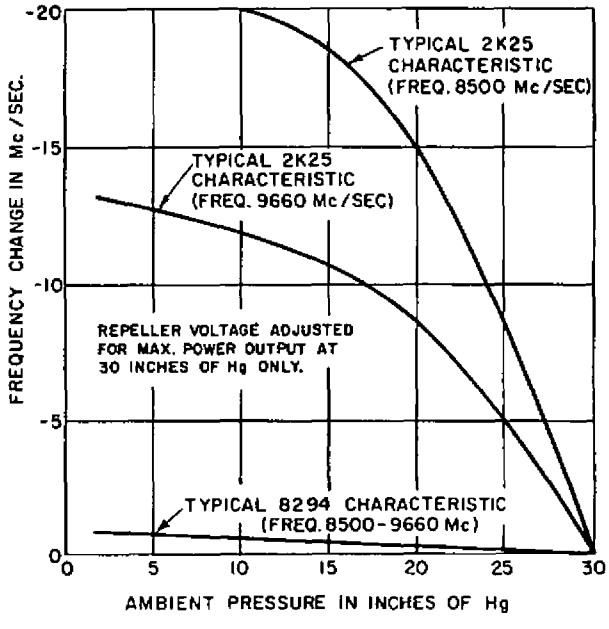
COMPARATIVE
FREQUENCY CHANGE
VS AMBIENT PRESSURE