8288
Bendix Type TD-67

GAS NOISE SOURCE, NEON, PULSE

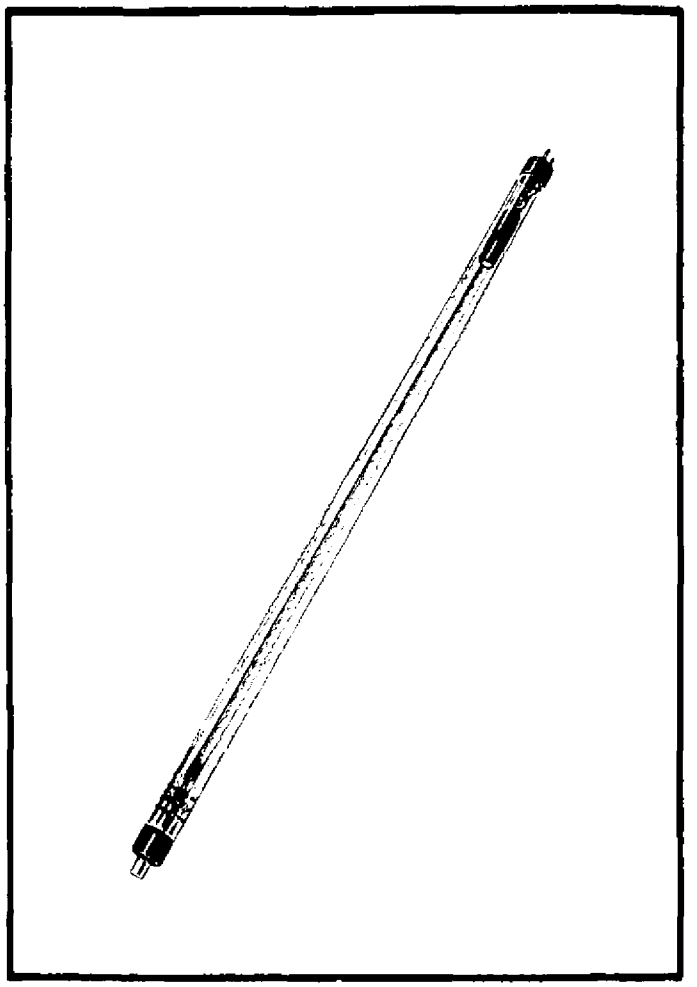

RATINGS

Anode Current, pulse	150 mA max.
Anode Current, Avg	150 mA max.
Starting Current (Ckt Fig. 1)	190 mA
Tube Dissipation	34 watts
Tube Voltage Drop	225 Vdc (note)
Ambient Temp. Range	−55° C to +85° C

Note: If the anode current during the "on time" of a square pulse (of greater than 100 microsec duration) is nominally the same as the rated D.C. anode current, the tube drop during this period will be approximately the same as the rated D.C. tube drop.

DESCRIPTION

This tube is designed for use as a noise source in microwave measurements. It is constructed for use with the RG-50/U waveguide to provide noise in the 5.85-8.20 kMc waveband. When used in a 10° or 15° E-plane mount assembly, it functions as an untuned termination over the entire recommended transmission bandwidth of the guide. It is a cold cathode type noise source designed primarily for pulse operation but may be used for continuous service with somewhat reduced life.

OPERATING CHARACTERISTICS

The use of pure inert gas eliminates the dependence of noise output on the operating temperature. The noise source is available for measurement instantaneously with little change due to ambient temperature variations. The performance of the tube is non-critical with respect to variations in the discharge current over a wide range.

The average voltage standing wave ratio (VSWR) over the recommended transmission bandwidths of the guides is a maximum of 1.15. The excess noise ratio, 10 log $\left(\frac{T_{eff}}{290} - 1\right)$, is 17.98 ± .3db.

The circuit of Figure 1 is a basic starting and operating circuit. The pentode or beam tube acts as a switch interrupting the current flow in L_1 when the cut-off bias switch is closed. The resultant voltage spike developed is impressed across the noise tube. The current is limited by R_3 to rated value. Capacitor C_1 flattens the pulse peak and assists in initiating the noise tube discharge. C_1 must not be large enough to lower the voltage spike below the firing voltage of the noise tube and must be of high voltage rating. Current through the beam tube is adjusted by R_4 to provide rated choke current. If the application requires only infrequent starting, the hard tube may be replaced by a mercury switch.

For most normal pulse applications, this basic circuit can be modified to drive the grid of the switch tube with pulses, thus pulsing the noise output. For high repetition rates or for control of pulse shape, a circuit, similar to that shown in Figure 2, which insures extinguishing of the noise tube current, is necessary.

THE Bendix CORPORATION
Red Bank DIVISION, EATONTOWN, NEW JERSEY

Publication No. RT21-13
Supersedes Pub. No. RT13-8

from JEDEC release 4204, April 1, 1963

Printed in U.S.A.

GAS NOISE SOURCE, NEON, PULSE

8288

Bendix Type TD-67

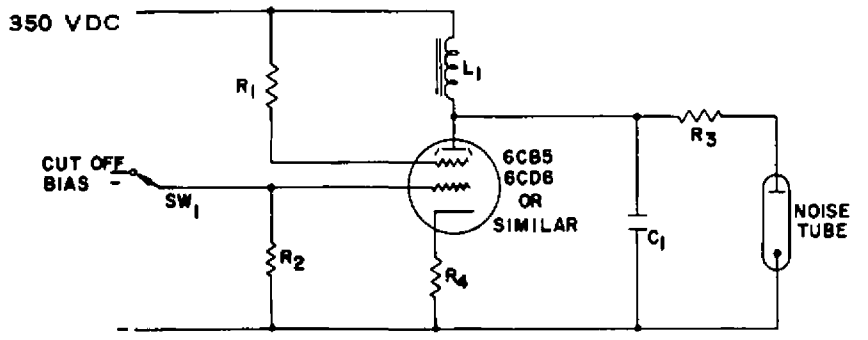

L_1 - INDUCTANCE
R_1 - SCREEN DROPPING RESISTOR
R_2 - GRID RESISTOR
R_3 - NOISE TUBE CURRENT LIMITING RESISTOR
R_4 - NORMAL BIAS RESISTOR
SW_1 - START - RUN SWITCH
C_1 - SURGE CAPACITOR

FIGURE 1. BASIC STARTING AND OPERATING CIRCUIT

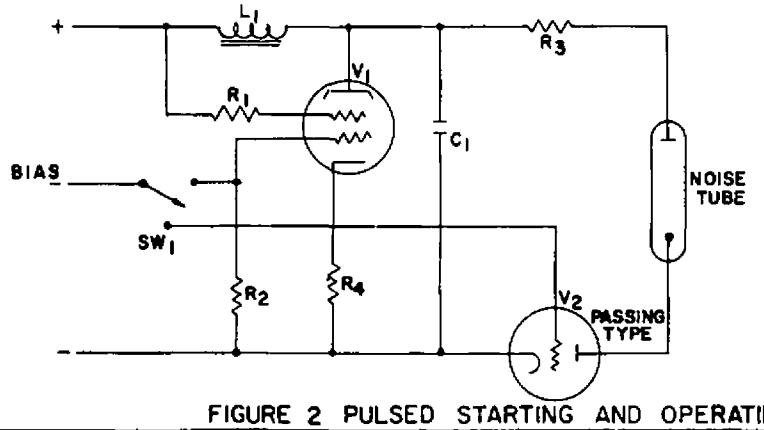

L_1 - INDUCTANCE
R_1 - SCREEN DROPPING RESISTOR
R_2 - GRID RESISTOR
R_3 - NOISE TUBE CURRENT LIMITING RESISTOR
R_4 - NORMAL BIAS RESISTOR
SW_1 - START - RUN OR ON-OFF SWITCH
C_1 - SURGE CAPACITOR
V_1 - TURN - ON TUBE
V_2 - TURN - OFF TUBE

FIGURE 2 PULSED STARTING AND OPERATING CIRCUIT

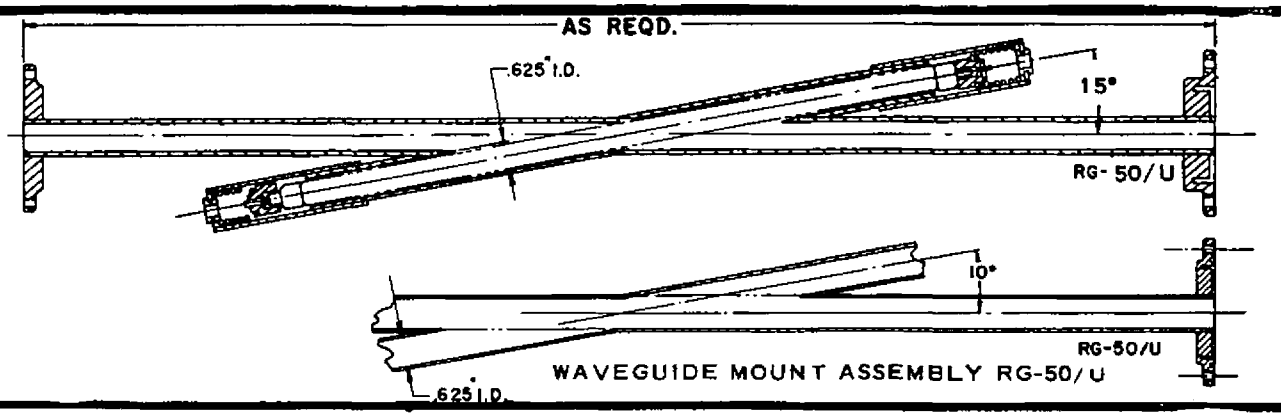

WAVEGUIDE MOUNT ASSEMBLY RG-50/U

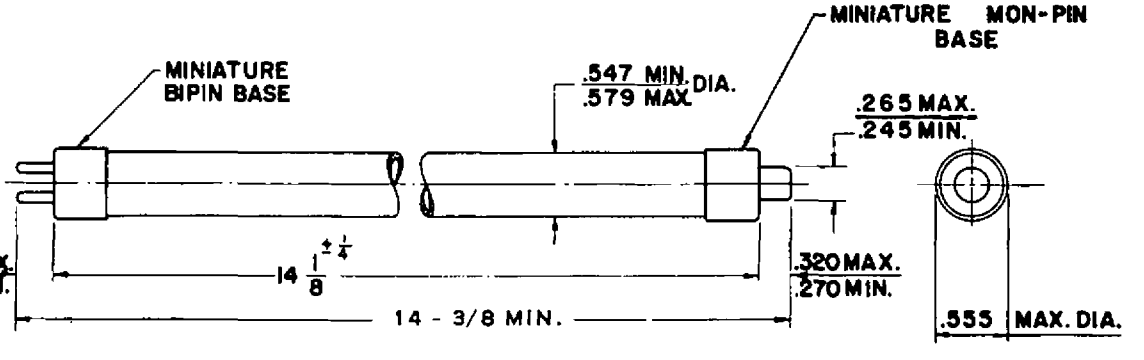

OUTLINE DRAWING