TECHNICAL DATA

8283
3CX1000A7

HIGH-MU
POWER TRIODE

The EIMAC 8283/3CX1000A7 is a ceramic-metal zero-bias triode intended for Class-AB2 linear amplifier service in either grid-driven or cathode-driven configuration. It is recommended for use as a grid driven, push-pull audio amplifier or modulator and as a cathode driven linear amplifier through the VHF-TV bands.

GENERAL CHARACTERISTICS[1]

ELECTRICAL

Filament: Thoriated-Tungsten Mesh	
Voltage	5.0 ± 0.25 V
Current, at 5.0 volts	30.5 A
Amplification Factor (Average)	200
Direct Interelectrode Capacitance (Grounded Cathode)[2]	
Cin	32.0 pF
Cgp	14.0 pF
Cout	0.15 pF
Direct Interelectrode Capacitance (Grounded Grid)[2]	
Cin	32.0 pF
Cpk	0.15 pF
Cout	14.0 pF
Frequency of Maximum Ratings	220 MHz

1. Characteristics and operating values are based upon performance tests. These figures may change without notice as the result of additional data or produce refinement. EIMAC Division of Varian should be consulted before using this information for final equipment design.

2. Capacitance values are for a cold tube as measured in a special shielded fixture in accordance with Electronic Industries Association Standard RS-191.

MECHANICAL

Maximum Overall Dimensions:	
Length	4.80 in; 121.9 mm
Diameter	3.38 in; 85.8 mm
Net Weight	2 lb; 0.91 kg
Operating Position	Vertical, base up or down
Cooling	Forced Air
Base	Special Breechlock
Recommended Air-System Socket	EIMAC SK-860 or SK-870
Recommended Air Chimney	EIMAC SK-816
Maximum Temperature, Anode Core & Ceramic/Metal Seals	250°C

(Effective 3-25-75) © 1963, 1968, 1975 by Varian

Printed in U.S.A.

AUDIO-FREQUENCY AMPLIFIER OR MODULATOR

Class-AB_2 Grid Driven

ABSOLUTE MAXIMUM RATINGS:

DC PLATE VOLTAGE	3500	VOLTS
DC PLATE CURRENT	1.0	AMPERE
PLATE DISSIPATION	1000	WATTS
GRID DISSIPATION	45	WATTS

TYPICAL OPERATION, (Two tubes)

Plate Voltage	2000	2500	Vdc
Grid Voltage	0	0	Vdc
Zero-Signal Plate Current	400	500	mAdc
Max-Signal Plate Current	2.0	2.0	Adc
Max-Signal Grid Current	590	480	mAdc
Peak AF driving Voltage (per tube)	95	90	v
Driving Power	25	44	W
Load Resistance (plate-to-plate)	1900	2580	Ω
Max-Signal Plate Output Power	2350	3100	W

RADIO-FREQUENCY LINEAR AMPLIFIER

Class-AB_2, Grounded-Grid

ABSOLUTE MAXIMUM RATINGS:

DC PLATE VOLTAGE	3500	VOLTS
DC PLATE CURRENT	1.0	AMPERE
PLATE DISSIPATION	1500	WATTS
GRID DISSIPATION	45	WATTS

TYPICAL OPERATION

Plate Voltage	2000	2500	3500	Vdc
Grid Voltage[1]	0	0	-12	Vdc
Zero-Signal Plate Current	238	305	129	mAdc
Single-Tone Plate Current	875	800	857	mAdc
Two-Tone Plate Current	600	585	590	mAdc
Single-Tone Grid Current	230	205	225	mAdc
Two-Tone Grid Current	130	120	120	mAdc
Peak RF Driving Voltage	80	74	110	v
Driving Power	80	60	100	W
Peak Envelope Power Output	940	1170	2060	W
Resonant Load Impedance	1100	1670	2300	Ω
RF Driving Impedance	40	45	60	Ω
Third Order IM Distortion[2]	-29	-31	-31	dB
Fifth Order IM Distortion[2]	-37	-40	-39	dB

1. The bias voltage in this set of typical operating conditions was obtained by means of a -12 volt 50 watt Zener diode in the negative return to the center-tap of the filament transformer.

2. The intermodulation distortion products are referenced against one tone of a two equal tone signal.

RADIO-FREQUENCY AMPLIFIER OR OSCILLATOR - Class C.

ABSOLUTE MAXIMUM RATINGS:

DC PLATE VOLTAGE	3500	VOLTS
DC GRID VOLTAGE	-100	VOLTS
DC PLATE CURRENT	0.7	AMPERE
PLATE DISSIPATION	1000	WATTS
GRID DISSIPATION	45	WATTS

PLATE MODULATED RADIO-FREQUENCY AMPLIFIER - Class C.

ABSOLUTE MAXIMUM RATINGS:

DC PLATE VOLTAGE	2000	VOLTS
DC GRID VOLTAGE	-100	VOLTS
DC PLATE CURRENT	0.55	AMPERE
PLATE DISSIPATION	670	WATTS
GRID DISSIPATION	45	WATTS

RANGE VALUES FOR EQUIPMENT DESIGN

	Min.	Max.	
Filament Current, at 5.0 volts	28.0	33.0	A
Zero Bias Plate Current, with E_b = 2500 Vdc	250	350	mA
Cut-off Grid Voltage (E_b = 2500 Vdc; I_b = 1.0 mA)	---	-25	V
Interelectrode Capacitances (Grounded Cathode)[1]			
Cin	29.0	35.0	pF
Cout	---	0.2	pF
Cgp	12.0	16.0	pF
Interelectrode Capacitances (Grounded Grid)[1]			
Cin	29.0	35.0	pF
Cout	12.0	16.0	pF
Cpk	---	0.2	pF

1. Capacitance values are for a cold tube as measured in a special shielded fixture in accordance with Electronic Industries Association Standard RS-191.

APPLICATION

MOUNTING & SOCKETING - The 3CX1000A7 must be operated with its axis vertical, base up or down. The EIMAC SK-860 and SK-870 air-system sockets are available for use with the tube. The SK-870 has its grid contacts grounded to the socket frame. No contacts are grounded with the SK-860. The EIMAC SK-816 air-chimney is also available to direct cooling air from the socket through the anode cooling fins.

COOLING - The maximum temperature rating for the external surfaces and the anode core of the 3CX1000A7 is 250°C. Tube life is prolonged if these areas are maintained at somewhat lower temperatures. The table lists air-flow requirements to maintain tube temperatures below 225°C with 50°C inlet air and base-to-anode air flow.

SEA LEVEL		
Plate Diss. (watts)	Air Flow (cfm)	Press. Drop (In. H_2O)
600	12	0.12
800	16	0.19
1000	20.5	0.30
1500	33	0.65
10,000 FEET		
600	18	0.18
800	24	0.28
1000	31	0.45
1500	50	0.97

FILAMENT - Rated filament voltage for the 3CX1000A7 is 5.0 volts. Filament voltage, as measured at the socket, should be maintained at this value to obtain optimum performance and maximum tube life. In no case should it be allowed to deviate from 5.0 volts by more than plus or minus five per cent.

INPUT CIRCUIT - When the 3CX1000A7 is operated as a grounded-grid rf amplifier, the use of a resonant tank in the cathode circuit is recommended to obtain greatest linearity and power output. For best results with a single-ended amplifier, it is suggested that the cathode tank circuit operate at a "Q" of five or more.

CLASS-C OPERATION - Although designed for Class-AB_2 service, the 3CX1000A7 may be operated as a Class-C power amplifier or oscillator, or as a plate-modulated rf amplifier. The zero-bias characteristic can be used to advantage in Class-C amplifiers by employing only grid leak bias, provided the anode voltage is not over 2500 Vdc. If driving power fails under these circumstances, plate dissipation will be kept within the maximum rating since the tube will operate at normal static zero-bias conditions.

For Class C operation with anode voltage in excess of 2500 Vdc additional protective bias voltage is required.

INTERLOCKS - An interlock device should be provided to insure that cooling air is established before application of electrical power, including the filament voltage. The circuit should be so arranged that rf drive cannot be applied in the absence of normal anode voltage.

HIGH VOLTAGE - The 3CX1000A7 operates at voltages which can be deadly, and the equipment must be designed properly and operating precautions must be followed. Equipment must be designed so that no one can come in contact with high voltages. All equipment must include safety enclosures for high-voltage circuits and terminals, with interlock switches to open the primary circuits of the power supplies and to discharge high-voltage condensers whenever access doors are opened. Interlock switches must not be bypassed or "cheated" to allow operation with access doors open. Always remember that HIGH VOLTAGE CAN KILL.

INTERELECTRODE CAPACITANCE - The actual internal interelectrode capacitance of a tube is influenced by many variables in most applications, such as stray capacitance to the chassis, capacitance added by the socket used, stray capacitance between the tube terminals, and wiring effects. To control the actual capacitance values within the tube, as the key component involved, the industry and Military Services use a standard test procedure as described in Electronic Indus-

tries Association Standard RS-191. This requires the use of specially constructed test fixtures with effectively shield all external tube terminals or leads from each other and eliminates any capacitance reading to "ground". The test is performed on a cold tube. Other factors being equal, controlling internal tube capacitance in this way normally assures good interchangeability of tubes over a period of time, even when the tube may be made by different manufacturers. The capacitance values shown in the manufacturer's technical data, or test specifications, normally are taken in accordance with Standard RS-191.

The equipment designer is therefore cautioned to make allowance for the actual capacitance values which will exist in any normal application. Measurements should be taken with the socket and mounting which represent approximate final layout if capacitance values are highly significant in the design.

SPECIAL APPLICATIONS - If it is desired to operate these tubes under conditions widely different from those given here, write to Power Grid Tube Division, EIMAC Division of Varian, 301 Industrial Way, San Carlos, California 94070, for information and recommendations.

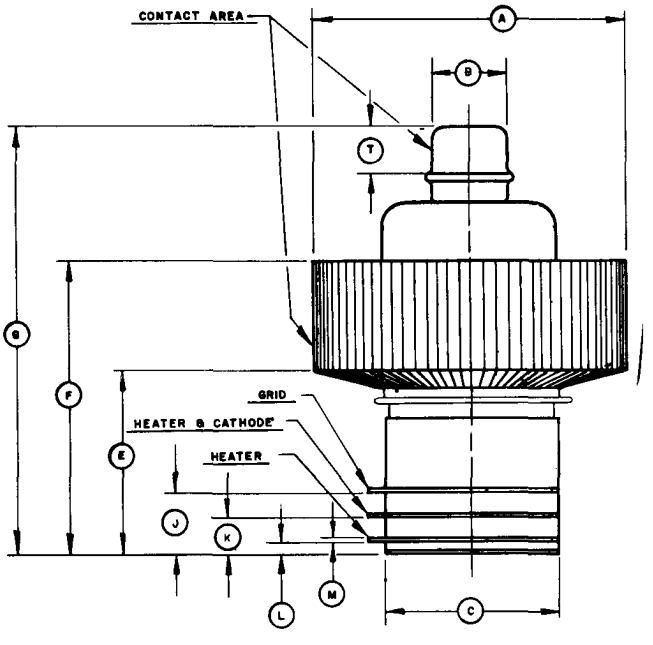

DIMENSIONAL DATA						
DIM	INCHES			MILLIMETERS		
	MIN.	MAX.	REF.	MIN.	MAX.	REF.
A	3.325	3.375	- -	84.45	85.72	- -
B	0.807	0.817	- -	20.50	20.75	- -
C	1.870	1.900	- -	47.50	48.26	- -
D	2.250	2.300	- -	57.15	58.42	- -
E	2.000	2.194	- -	50.80	55.73	- -
F	3.175	3.375	- -	80.64	85.72	- -
G	4.600	4.800	- -	116.8	121.9	- -
J	0.690	0.710	- -	17.53	18.03	- -
K	0.415	0.435	- -	10.54	11.04	- -
L	0.140	0.165	- -	3.56	4.19	- -
M	0.020	0.030	- -	0.508	0.762	- -
N	0.700	0.800	- -	17.78	20.32	- -
P	0.314	0.316	- -	7.97	8.03	- -
R	55°	65°	- -	55°	65°	- -
S	115°	125°	- -	115°	125°	- -
T	0.470	0.530	- -	11.94	13.46	- -

NOTE:
REFERENCE DIMENSIONS ARE FOR INFORMATION ONLY & ARE NOT REQUIRED FOR INSPECTION PURPOSES.

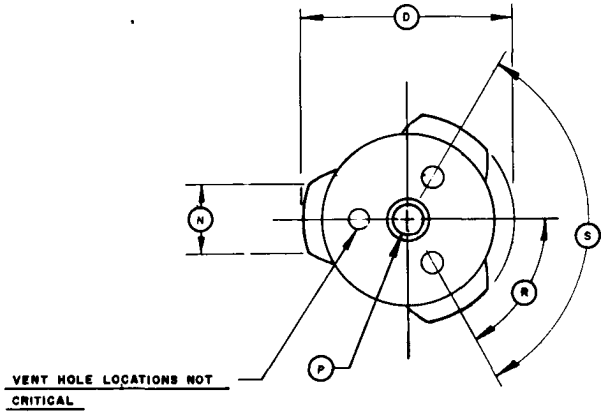

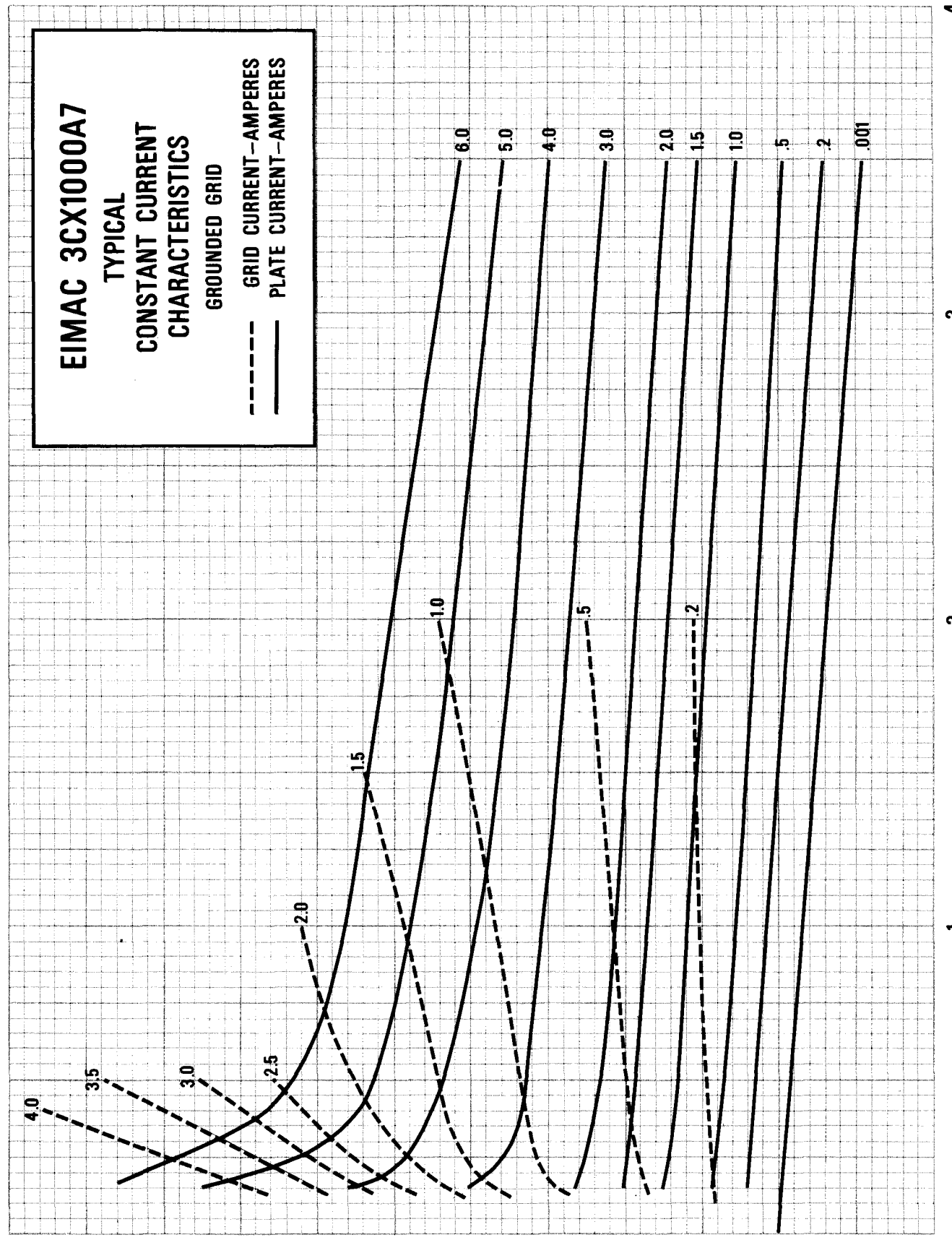
EIMAC 3CX1000A7
TYPICAL
CONSTANT CURRENT
CHARACTERISTICS
GROUNDED GRID
GRID CURRENT–AMPERES
PLATE CURRENT–AMPERES
6.0
5.0
4.0
3.0
2.0
1.5
1.0
.5
.2
.001
4.0
3.5
3.0
2.5
2.0
1.5
1.0
.5
.2
−250
−200
−150
−100
−50
0
+50
CATHODE TO GRID–VOLTS
1
2
3
4
PLATE TO GRID–KILOVOLTS

CURVE #3533