8252W / 4PR60C

TECHNICAL DATA

PULSE MODULATOR TETRODE

The EIMAC 8252W/4PR60C is a high-vacuum tetrode intended for pulse-modulator service in circuits employing inductive or resistive loads. This tube unilaterally replaces the 715C and the 5D21 and supersedes the 8252/4PR60B. The internal structure of the tube has been strengthened to minimize the effects of shock and vibration.

The 8252W/4PR60C has a maximum plate dissipation rating of 60 watts, is cooled by radiation and convection, and delivers pulse output power in the region of 300 kilowatts with less than one kilowatt of pulse driving power.

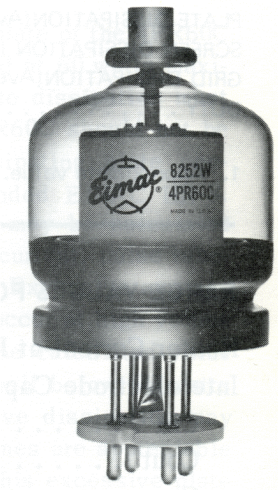

GENERAL CHARACTERISTICS[1]

ELECTRICAL

Cathode: Oxide-coated, Unipotential		
Heater Voltage	26.0	V
Heater Current	2.1	A
Cathode Heating Time	3	Min.
Direct Interelectrode Capacitances[2]		
Cin	43	pF
Cout	8.5	pF
Cgp	1.5	pF

1. Characteristics and operating values are based upon performance tests. These figures may change without notice as the result of additional data or product refinement. EIMAC Division of Varian should be consulted before using this information for final equipment design.
2. Capacitance values are for a cold tube as measured in a special shielded fixture in accordance with Electronic Industries Association Standard RS-191A.

MECHANICAL

Environmental Capability	See Application Note
Base	Fits E.F. Johnson Co. Socket Number 122-234 or equivalent
Mounting Position	Any
Cooling	Radiation and Convection
Recommended Heat Dissipating Plate Connector	EIMAC HR-8
Maximum Seal and Envelope Temperatures	200°C
Maximum Over-All Dimensions	
Length	6.000 in; 152.4 mm
Diameter	3.063 in; 77.9 mm
Net Weight	12 oz; 0.34 kg
Shipping Weight	2.5 lb; 1.14 kg

(Revised 6-30-71) © 1962, 1966, 1971 Varian

Printed in U.S.A.

PULSE MODULATOR OR SWITCH TUBE SERVICE

ABSOLUTE MAXIMUM RATINGS

DC PLATE VOLTAGE	20 KILOVOLTS
DC SCREEN VOLTAGE	1.5 KILOVOLTS
DC GRID VOLTAGE[2]	-1.0 KILOVOLT
PEAK POSITIVE GRID VOLTAGE	300 VOLTS
PEAK PLATE CURRENT	18 AMPERES
PEAK POSITIVE PLATE VOLTAGE	25 KILOVOLTS
PLATE DISSIPATION(Average)	60 WATTS
SCREEN DISSIPATION (Average)	8 WATTS
GRID DISSIPATION(Average)	1 WATT
DUTY	See chart page 6

1. Approximate value.

TYPICAL OPERATION

Pulse Modulator (Per Tube)

DC Plate Voltage	16.0	20.0	kVdc
Pulse Plate Current	10.0	18.0	a
DC Screen Voltage	1.25	1.25	kVdc
Pulse Screen Current[1]	1.8	2.7	a
DC Grid Voltage	-550	-600	Vdc
Pulse Grid Current[1]	0.20	0.75	a
Pulse Positive Grid Voltage	30	150	v
Duty	0.0025	.001	
Pulse Duration	5	2	μs
Peak Positive Plate Voltage	25	25	kv
Pulse Input Power	160	360	kw
Pulse Output Power	150	337	kw
Pulse Output Voltage	15.0	18.75	kv

2. The effective grid-circuit resistance must not exceed 100,000 ohms.

RANGE VALUES FOR EQUIPMENT DESIGN

	Min.	Max.	
Heater Current at E_f = 27.0 volts	1.95	2.35	A
Interelectrode Capacitances[1] (grounded cathode connection)			
Cin	35	50	pF
Cout	6.0	11	pF
Cgp	---	2.0	pF

1. Capacitance values are for a cold tube as measured in a special shielded fixture in accordance with Electronic Industries Association Standard RS-191.

APPLICATION

MECHANICAL

MOUNTING - The 4PR60C may be mounted and operated in any position. A flexible connecting strap should be provided between the plate terminal and the external plate circuit.

If environmental stress, such as shock or vibration is expected, the tube must be clamped into position by means of clamps on the metal skirt. Such clamps must be shaped to fit the contour of the skirt and must be fastened to the tube before being tightened to the chassis in order that no distorting force will be applied. No lateral pressure or clamping action should be applied to the base pins or to any part of the tube other than the skirt. The skirt is internally connected to the cathode.

COOLING - Adequate ventilation must be provided so that seal and/or envelope temperatures do not exceed 200°C under any operating or standby condition. When the 4PR60C is operated where air circulation is restricted, these temperatures can easily reach 225°C or more which will accelerate seal deterioration and cause early tube failure.

Adequate control of the base temperature, in particular, is necessary. Envelope and plate-seal temperatures do not ordinarily require special attention provided that an HR-8 heat dissipating plate connector is used. However, each individual application of the 4PR60C should be carefully evaluated to assure safe operating temperatures. A blower is usually required only when normal air circulation is restricted, when the ambient temperature exceeds 25°C, when the altitude is other than sea level, or when a combination of these factors exists.

ELECTRICAL

HEATER OPERATION - The heater voltage, as measured directly at the heater pins, should be maintained at the rated value of 26.0 volts. Maximum variations in heater voltage must be kept within the range of 23.4 to 28.6 volts. Where consistent performance and long tube life are factors, the heater voltage must be kept within range of 24.7 to 27.3 volts. The peak pulse-emission capability of the cathode may be impaired at low

heater voltages, and high heater voltages contribute to short tube life.

A heater noise test is conducted periodically on 4PR60C samples. This test insures that the heater/cathode assembly will not generate excessive rf noise during vibration over the frequency range of 10 to 50 cps.

A 500-hour heater cycling test is also conducted periodically on 4PR60C samples. This test consists of at least 1000 complete on-off cycles and insures that grid-to-cathode shorts will not occur as a result of cumulative hysteresis effects upon mechanical joints in the cathode assembly.

CATHODE OPERATION - It is essential that the minimum cathode heating time of three minutes be observed prior to the flow of cathode current. Conservative design for reliable tube operation in pulse circuits dictates the use of five minutes minimum heating time.

The "Cathode Current Derating Chart" depicts the current capabilities of the 4PR60C cathode at various pulse durations and duty factors. To use this chart, enter with pulse duration and note the intersection with desired pulse *cathode* current (the total of plate, screen, and grid currents during particular pulse condition). At this intersection read off values of maximum duty and/or pulse repetition rate.

Under a given set of operating conditions, element dissipations may limit the maximum permissible duty to a value less than that which cathode considerations would dictate. When this occurs, it will usually be found that screen dissipation is the limiting factor under low tube-voltage-drop conditions and that plate dissipation limits the maximum duty under high tube-voltage-drop conditions.

CONTROL-GRID OPERATION - The average power dissipated by the control grid of the 4PR-60C must not exceed one watt. Control-grid dissipation is not usually a limiting factor with this tube, but can be computed as the product of pulse grid current, pulse positive grid voltage, and duty factor. Similarly, pulse driving power is pulse grid current times pulse grid voltage swing (bias voltage plus positive grid voltage).

SCREEN-GRID OPERATION - The average power dissipated by the screen of the 4PR60C must not exceed eight watts. Screen dissipation is the product of dc screen voltage, pulse screen current, and duty factor. Excessive screen dissipation is likely to occur under conditions of low tube-voltage drop during conduction. This condition can be relieved by using a lower plate load resistance which will cause higher tube-voltage drop during conduction.

A bleeder resistance designed to draw at least 10 milliamperes of current should be connected directly from screen to cathode of the 4PR60C. This bleeder resistance will insure that only a positive current load is presented to the screen supply.

PLATE OPERATION - The plate of the 4PR60C is radiation cooled and is rated at 60 watts maximum dissipation. Average plate dissipation must not exceed 60 watts. The 4PR60C should not be operated without a heat-dissipating plate connector such as the recommended EIMAC HR-8.

Average plate dissipation may be calculated as the product of pulse plate current, pulse tube-voltage drop, and duty factor. Excessive average plate dissipation is likely to occur at high values of pulse tube-voltage drop. The calculated value of plate dissipation may be well below 60 watts in a given case, but excessive dissipation may result if pulse rise and fall times are appreciable compared to pulse duration. This excessive plate dissipation occurs because long rise and fall times slow down the plate voltage swing and allow plate current to flow for longer periods in the high voltage-drop region.

The plate-supply voltage for the 4PR60C should not exceed 20 kilovolts. In circuits employing inductive loading, the peak instantaneous plate voltage should not exceed 25 kilovolts.

CAUTION-HIGH VOLTAGE - Operating voltage for the 4PR60C can be deadly, so the equipment must be designed properly and operating precautions must be followed. Design equipment so that no one can come in contact with high voltages. All equipment must include safety enclosures for high voltage circuits and terminals, with interlock switches to open the primary circuits of the power supply and to discharge high voltage capacitors whenever access doors are opened. Interlock switches must not be bypassed or "cheated" to allow operation with access doors open. Always remember that HIGH VOLTAGE CAN KILL.

SHOCK/VIBRATION - The internal structure of the 4PR60C has been reinforced to minimize the effects of shock and vibration in the grid-cathode section of the tube. When environmental stress is expected, proper mounting is extremely important (see MOUNTING).

Production samples are periodically tested for ability to survive 50 G, 11 millisecond shock im-

pact, and vibration at a fixed double-amplitude of 0.08 inch over the range of 10 to 50 Hz and 10 G of acceleration over the range of 50 to 200 Hz.

X-RADIATION - High-vacuum tubes operating at voltages higher than 10 kilovolts produce progressively more dangerous X-ray radiation as the voltage is increased. The 4PR60C, operating at its rated voltages and currents, is a potential X-ray hazard. Only limited shielding is afforded by the tube envelope. Moreover, the X-ray radiation level can increase significantly with aging and gradual deterioration, due to leakage paths or emission characteristics as they are affected by the high voltage. X-ray shielding must be provided on all sides of tubes operating at these voltages to provide adequate protection throughout the tube's life. Periodic checks on the X-ray level should be made, and the tube should never be operated without adequate shielding in place when voltages above 10 kilovolts are in use. Lead glass, which attenuates X-rays, is available for viewing windows. If there is any doubt as to the requirement for or the adequacy of shielding, an expert in this field should be contacted to perform an X-ray survey of the equipment.

Operation of high-voltage equipment with interlock switches "cheated" and cabinet doors open in order to be better able to locate an equipment malfunction can result in serious X-ray exposure.

CAUTION-GLASS IMPLOSION - The EIMAC 4PR60C is pumped to a very high vacuum, which is contained by a glass envelope. When handling a glass tube, remember that glass is a relatively fragile material, and accidental breakage can result at any time. Breakage will result in flying glass fragments, so safety glasses, heavy clothing, and leather gloves are recommended for protection.

SPECIAL APPLICATION - If it is desired to operate this tube under conditions widely different from those listed here, write to Power Grid Tube Division, EIMAC Division of Varian, 301 Industrial Way, San Carlos, California 94070, for information and recommendations.

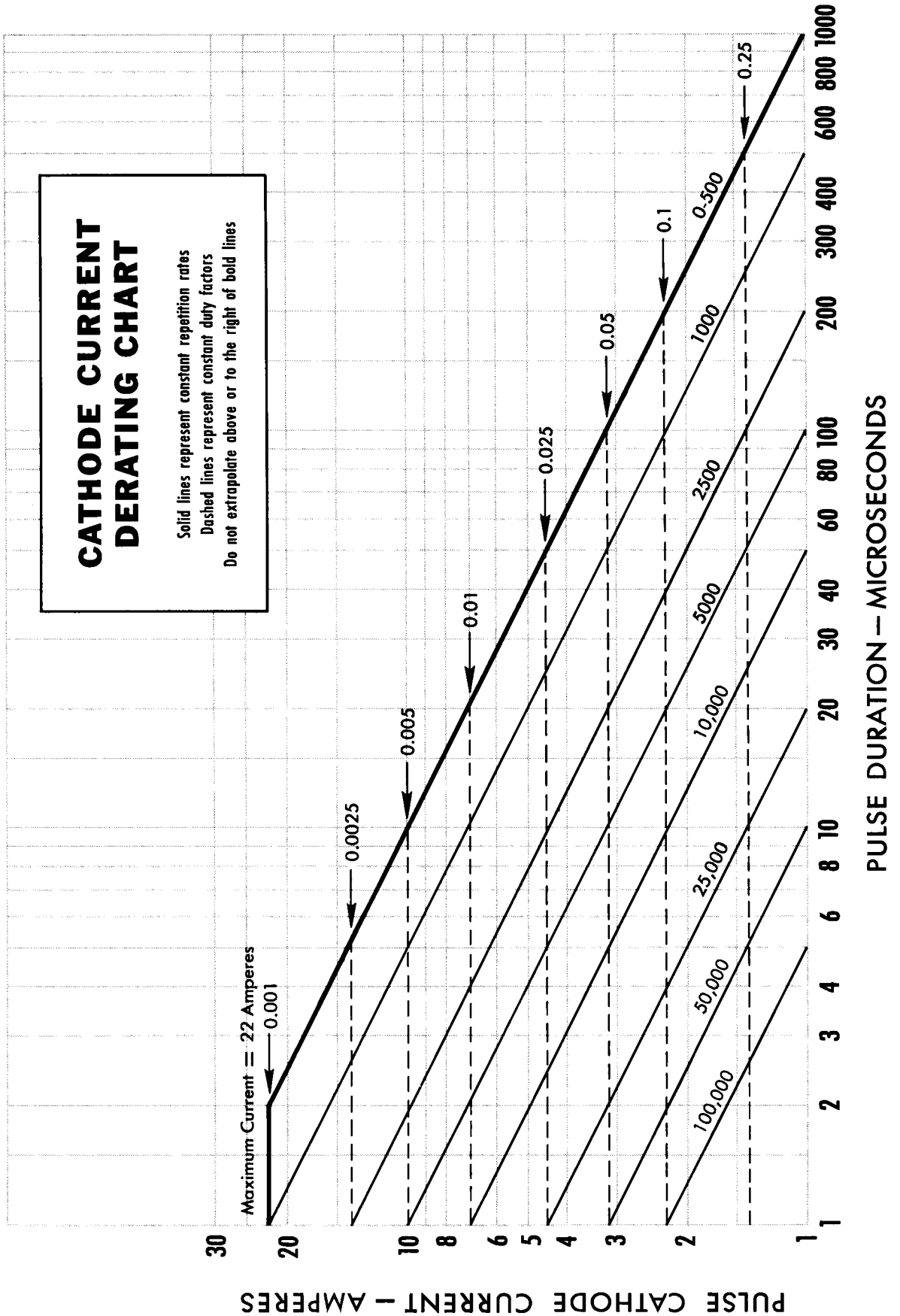
CATHODE CURRENT DERATING CHART
Solid lines represent constant repetition rates
Dashed lines represent constant duty factors
Do not extrapolate above or to the right of bold lines
Maximum Current = 22 Amperes
0.001
0.0025
0.005
0.01
0.025
0.05
0.1
0.500
0.25
100,000
50,000
25,000
10,000
5000
2500
1000
PULSE CATHODE CURRENT – AMPERES
30
20
10
8
6
5
4
3
2
1
PULSE DURATION – MICROSECONDS
1
2
3
4
6
8
10
20
30
40
60
80
100
200
300
400
600
800
1000

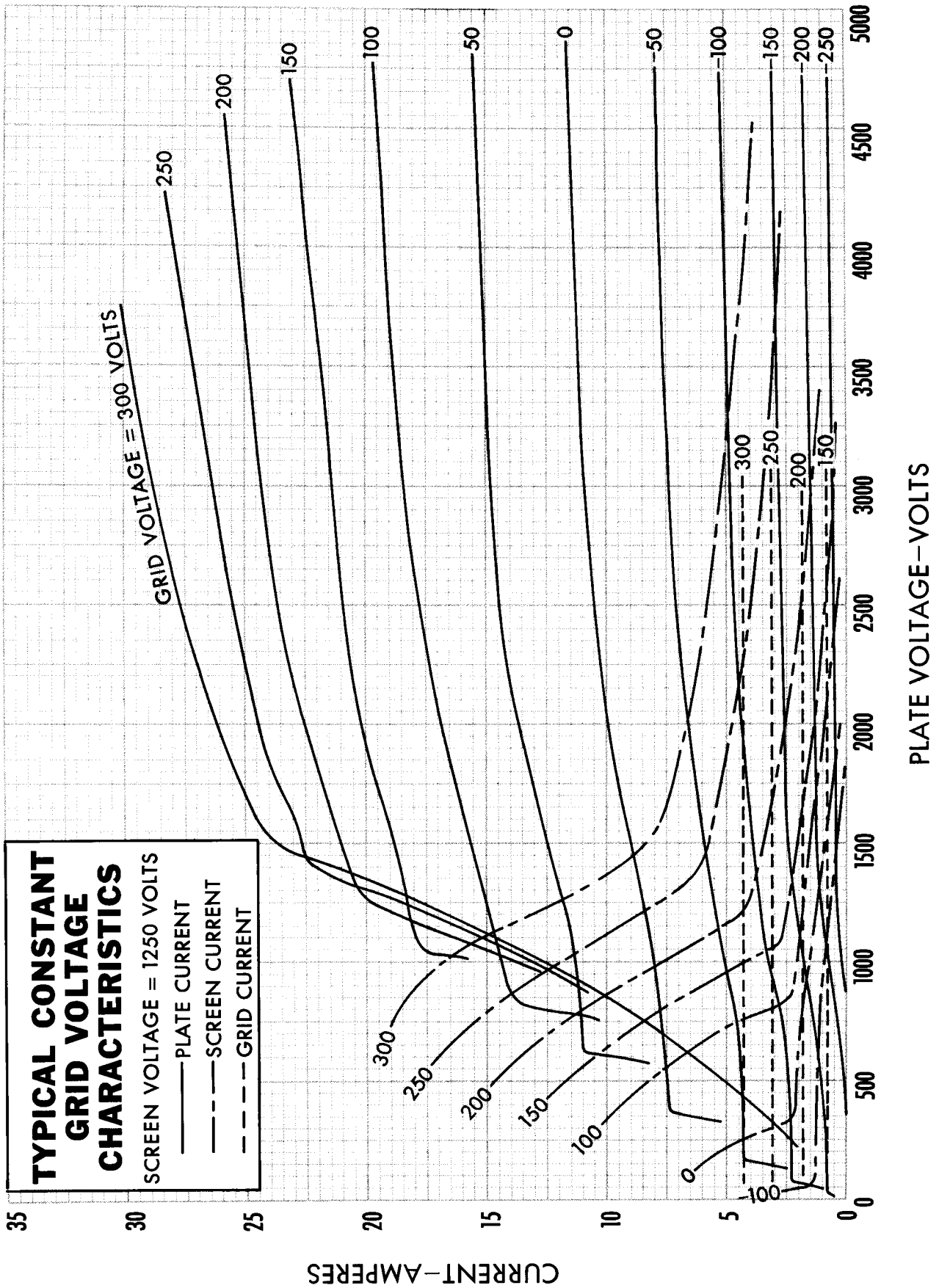
TYPICAL CONSTANT GRID VOLTAGE CHARACTERISTICS
SCREEN VOLTAGE = 1250 VOLTS
PLATE CURRENT
SCREEN CURRENT
GRID CURRENT
GRID VOLTAGE = 300 VOLTS
CURRENT–AMPERES
PLATE VOLTAGE–VOLTS
0
5
10
15
20
25
30
35
500
1000
1500
2000
2500
3000
3500
4000
4500
5000
250
200
150
100
50
0
-50
-100
-150
-200
-250
300

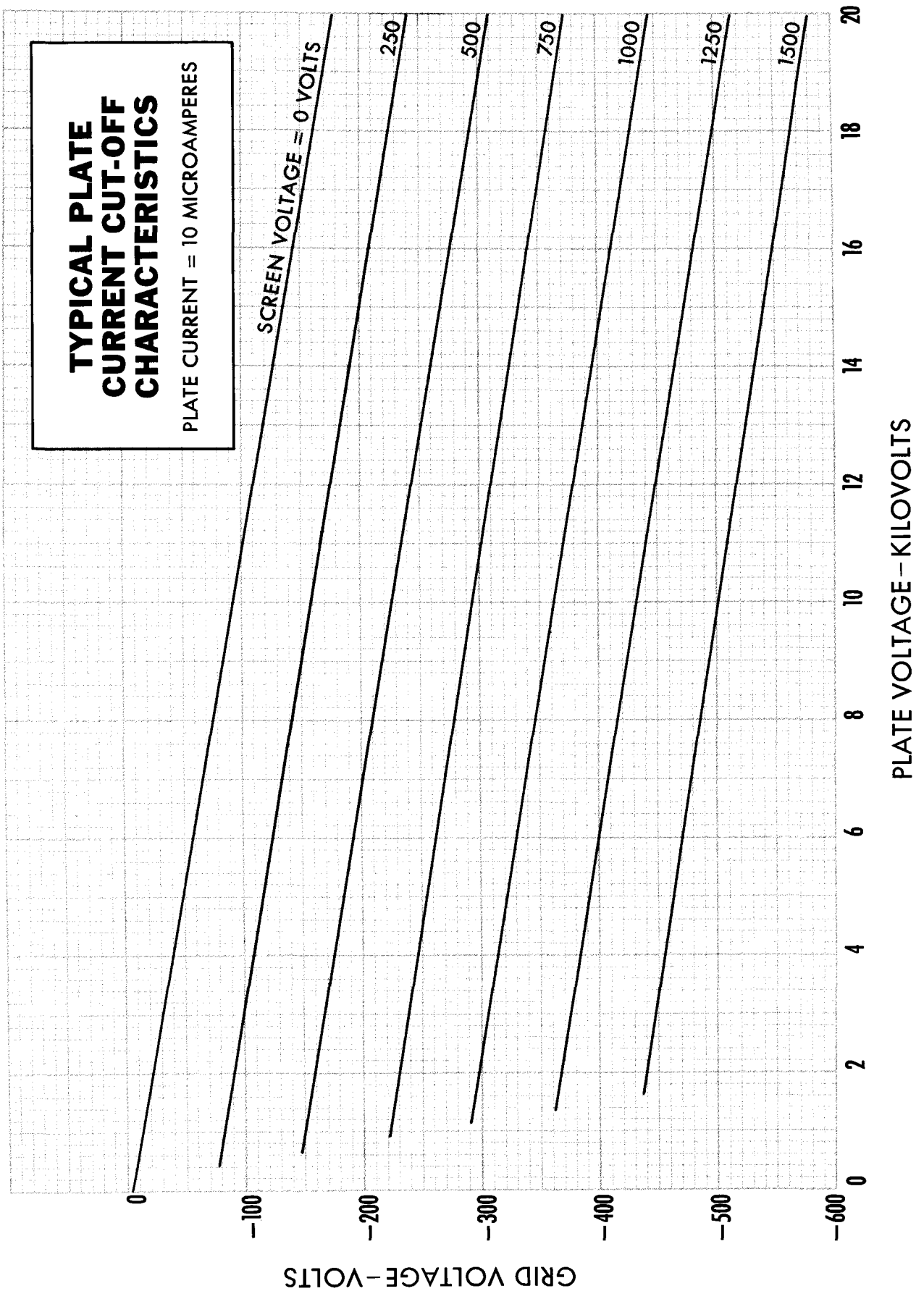
TYPICAL PLATE CURRENT CUT-OFF CHARACTERISTICS
PLATE CURRENT = 10 MICROAMPERES
SCREEN VOLTAGE = 0 VOLTS
250
500
750
1000
1250
1500
0
−100
−200
−300
−400
−500
−600
GRID VOLTAGE–VOLTS
0
2
4
6
8
10
12
14
16
18
20
PLATE VOLTAGE–KILOVOLTS

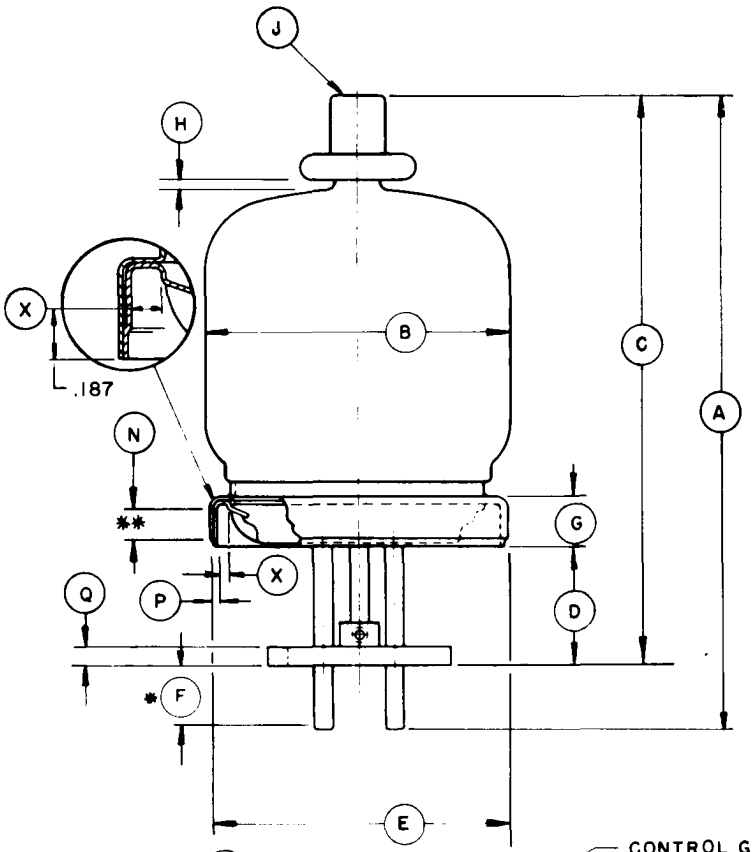

DIMENSIONAL DATA						
DIM.	INCHES			MILLIMETERS		
	MIN.	MAX.	REF.	MIN.	MAX.	REF.
A	5.750	6.000	- -	146.10	152.40	- -
B	- -	3.063	- -	- -	77.80	- -
C	5.344	5.594	- -	135.7	142.1	- -
D	1.125	1.250	- -	28.57	31.75	- -
E	2.885	2.905	- -	73.28	73.79	- -
F	0.328	- -	- -	8.33	- -	- -
G	0.438	0.500	- -	11.13	12.70	- -
H	0.016	- -	- -	0.41	- -	- -
J	CAP: C1-41 (JEDEC DESIGNATION)					
N	0.250	- -	- -	6.35	- -	- -
P	0.043	0.057	- -	1.09	1.45	- -
Q	- -	- -	0.188	- -	4.77	- -
R	- -	- -	0.687	- -	17.45	- -
T	0.171	0.203	- -	4.34	5.16	- -
U	0.171	0.203	- -	4.34	5.16	- -
V	1.788	1.813	- -	45.42	46.05	- -
W	0.183	0.191	- -	4.65	4.85	- -
X	0.157	- -	- -	3.99	- -	- -

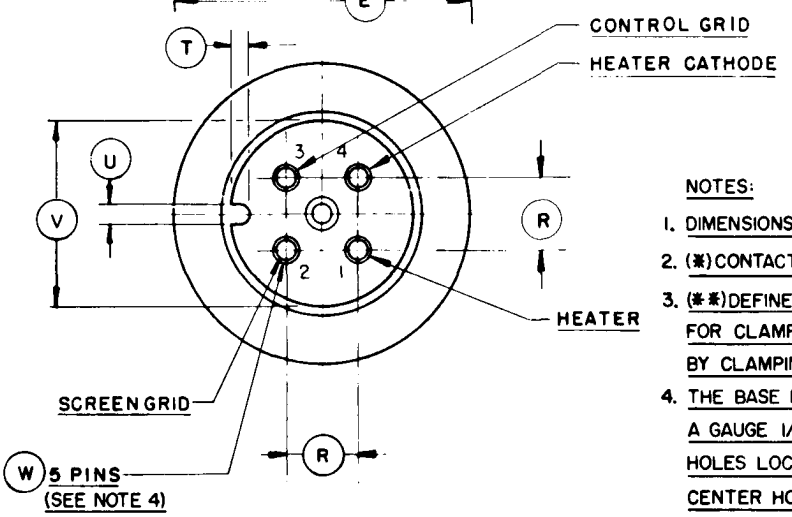

NOTES:

1. DIMENSIONS IN INCHES.
2. (*) CONTACT AREA.
3. (**) DEFINES CYLINDRICAL AREA AVAILABLE FOR CLAMPING WHICH MUST NOT BE DISTORTED BY CLAMPING ACTION.
4. THE BASE PINS SHALL BE CAPABLE OF ENTERING A GAUGE 1/4 INCH THICK HAVING FOUR .214" DIA. HOLES LOCATED ON 11/16 CENTERS AND A CENTER HOLE .250 DIA