EITEL-McCULLOUGH, INC.
SAN CARLOS, CALIFORNIA

8252
4PR60B

RADIAL-BEAM PULSE TETRODE

•

MODULATOR AMPLIFIER

The Eimac 8252/4PR60B is a high-vacuum tetrode intended for pulse-modulator service in circuits employing inductive or resistive loads. This tube unilaterally replaces the 715C and the 5D21 and supersedes the 4PR60A.

The 8252/4PR60B has a maximum plate dissipation rating of 60 watts, is cooled by radiation and convection, and delivers pulse output power in the region of 300 kilowatts with less than one kilowatt of pulse driving power.

GENERAL CHARACTERISTICS

ELECTRICAL

	Min.	Nom.	Max.	
Cathode: Oxide-coated, Unipotential				
Heater Voltage		26.0		volts
Heater Current		2.1		amperes
Cathode Heating Time	3	5		minutes
Direct Interelectrode Capacitances				
Grid-Plate			2.0	μμf
Input	35		50	μμf
Output	6.0		11	μμf

MECHANICAL

Minimum Shock Test	190g, 0.5ms half sine
Base	Fits E. F. Johnson Co. Socket Number 122-234 or equivalent
Mounting Position	Any
Cooling	Radiation and Convection
Recommended Heat Dissipating Plate Connector	Eimac HR-8
Maximum Seal and Envelope Temperatures	200° C
Maximum Over-All Dimensions	
Length	6.000 inches
Diameter	3.063 inches
Net Weight	12 ounces
Shipping Weight	2.5 pounds

RATINGS

MAXIMUM RATINGS—Pulse Modulator Service (Per Tube)

D-C PLATE VOLTAGE	20 MAX. KILOVOLTS
D-C SCREEN VOLTAGE	1.5 MAX. KILOVOLTS
D-C GRID VOLTAGE†	—1.0 MAX. KILOVOLT
PEAK POSITIVE GRID VOLTAGE	300 MAX. VOLTS
PEAK PLATE CURRENT	18 MAX. AMPERES
PEAK POSITIVE PLATE VOLTAGE	25 MAX. KILOVOLTS
PLATE DISSIPATION (AVERAGE)	60 MAX. WATTS
SCREEN DISSIPATION (AVERAGE)	8 MAX. WATTS
GRID DISSIPATION (AVERAGE)	1 MAX. WATT
DUTY	See chart page 4

†Effective grid-circuit resistance must not exceed 100,000 ohms.

TYPICAL OPERATION

Pulse Modulator (Per Tube)

D-C Plate Voltage	16.0	20.0	kilovolts
Pulse Plate Current	10.0	18.0	amperes
D-C Screen Voltage	1.25	1.25	kilovolts
Pulse Screen Current*	1.8	2.7	amperes
D-C Grid Voltage	—550	—600	volts
Pulse Grid Current*	0.20	0.75	ampere
Pulse Positive Grid Voltage	30	150	volts
Duty	0.0025	.001	
Pulse Duration	5	2	μsec
Peak Positive Plate Voltage	25	25	kilovolts
Pulse Input Power	160	360	kilowatts
Pulse Output Power	150	337	kilowatts
Pulse Output Voltage	15.0	18.75	kilovolts

*Approximate value.

(Effective 2-15-62) Copyright 1962 by Eitel-McCullough, Inc. Printed in U.S.A.

APPLICATION

MECHANICAL

MOUNTING—The 4PR60B may be mounted and operated in any position. A flexible connecting strap must be provided between the plate terminal and the external plate circuit.

The 4PR60B is designed to withstand 200g shocks of 0.5 millisecond duration transferred to the tube through clamps on the metal skirt. Such clamps must be shaped to fit the contour of the skirt and must be fastened to the tube before being tightened to the chassis in order that no distorting force will be applied. No lateral pressure or clamping action should be applied to the base pins or to any part of the tube other than the skirt. The skirt is internally connected to the cathode. The 4PR60B must be protected from severe vibration.

Cooling—Adequate ventilation must be provided so that seal and/or envelope temperatures do not exceed 200° C under any operating or standby condition. When the 4PR60B is operated where air circulation is restricted, these temperatures can easily reach 225° C or more which will accelerate seal deterioration and cause early tube failure.

Adequate control of the base temperature, in particular, is necessary. Envelope and plate-seal temperatures do not ordinarily require special attention provided that an HR-8 heat-dissipating plate connector is used. However, each individual application of the 4PR60B should be carefully evaluated to assure safe operating temperatures. A blower is usually required only when normal air circulation is restricted, when the ambient temperature exceeds 25° C, when the altitude is other than sea level, or when a combination of these factors exists.

ELECTRICAL

Heater Operation—The heater voltage, as measured directly at the heater pins, should be maintained at the rated value of 26.0 volts. Maximum variations in heater voltage must be kept within the range of 23.4 to 28.6 volts. Where consistent performance and long tube life are factors, the heater voltage must be kept within the range of 24.7 to 27.3 volts. The peak pulse-emission capability of the cathode may be impaired at low heater voltages, and high heater voltages contribute to short tube life.

A heater noise test is conducted periodically on 4PR60B samples. This test insures that the heater/cathode assembly will not generate excessive r-f noise during vibration over the frequency range of 10 to 50 cps.

A 500-hour heater cycling test is also conducted periodically on 4PR60B samples. This test consists of at least 1000 complete on-off cycles and insures that grid-to-cathode shorts will not occur as a result of cumulative hysteresis effects upon mechanical joints in the cathode assembly.

Cathode Operation—It is essential that the minimum cathode heating time of three minutes be observed prior to the flow of cathode current. Conservative design for reliable tube operation in pulse circuits dictates the use of five minutes minimum heating time.

The "Cathode Current Derating Chart" on page 4 depicts the current capabilities of the 4PR60B cathode at various pulse durations and duty factors. To use this chart, enter with pulse duration and note the intersection with desired pulse ***cathode*** current (the total of plate, screen, and grid currents during a particular pulse condition). At this intersection read off values of maximum duty and/or pulse repetition rate.

Under a given set of operating conditions, element dissipations may limit the maximum permissible duty to a value less than that which cathode considerations would dictate. When this occurs, it will usually be found that screen dissipation is the limiting factor under low tube-voltage-drop conditions and that plate dissipation limits the maximum duty under high tube-voltage-drop conditions.

Control-Grid Operation—The average power dissipated by the control grid of the 4PR60B must not exceed one watt. Control-grid dissipation is not usually a limiting factor with this tube, but can be computed as the product of pulse grid current, pulse positive grid voltage, and duty factor. Similarly, pulse driving power is pulse grid current times pulse grid voltage swing (bias voltage plus positive grid voltage).

Screen-Grid Operation—The average power dissipated by the screen of the 4PR60B must not exceed eight watts. Screen dissipation is the product of d-c screen voltage, pulse screen current, and duty factor. Excessive screen dissipation is likely to occur under conditions of low tube-voltage drop during conduction. This condition can be relieved by using a lower plate load resistance which will cause higher tube-voltage drop during conduction.

A bleeder resistance designed to draw at least 10 milliamperes of current should be connected directly from screen to cathode of the 4PR60B. This bleeder resistance will insure that only a positive current load is presented to the screen supply.

Plate Operation—The plate of the 4PR60B is radiation cooled and is rated at 60 watts maximum dissipation. Average plate dissipation must not exceed 60 watts. The 4PR60B should not be operated without a heat-dissipating plate connector such as the recommended Eimac HR-8.

Average plate dissipation may be calculated as the product of pulse plate current, pulse tube-voltage drop, and duty factor. Excessive average plate dissipation is likely to occur at high values of pulse tube-voltage drop. The calculated value of plate dissipation may be well below 60 watts in a given case, but excessive dissipation may result if pulse rise and fall times are appreciable compared to pulse duration. This excessive plate dissipation occurs because long rise and fall times slow down the plate voltage swing and allow plate current to flow for longer periods in the high voltage-drop region.

The plate-supply voltage for the 4PR60B should not exceed 20 kilovolts. In circuits employing inductive loading, the peak instantaneous plate voltage should not exceed 25 kilovolts.

4PR60B OUTLINE DRAWING AND DIMENSIONS

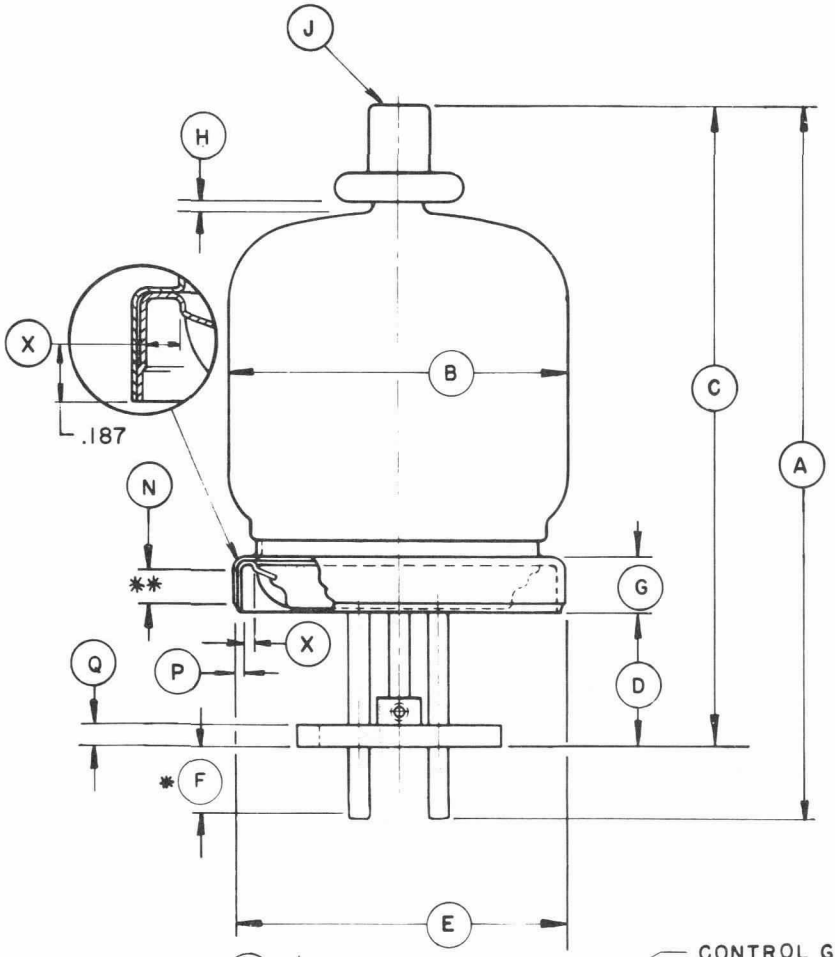

DIMENSION DATA		
REF.	MIN.	MAX.
A	5.750	6.000
B		3.063 DIA.
C	5.344	5.594
D	1.125	1.250
E	2.885 DIA.	2.905 DIA.
F	.328	
G	.438	.500
H	.016	
J	CAP: C1-41 (JEDEC DESIGNATION)	
N	.250	
P	.043	.057
Q	.188	
R	.687	
T	.171	.203
U	.171	.203
V	1.788 DIA.	1.813 DIA.
W	.183 DIA.	.191 DIA.
X	.157	

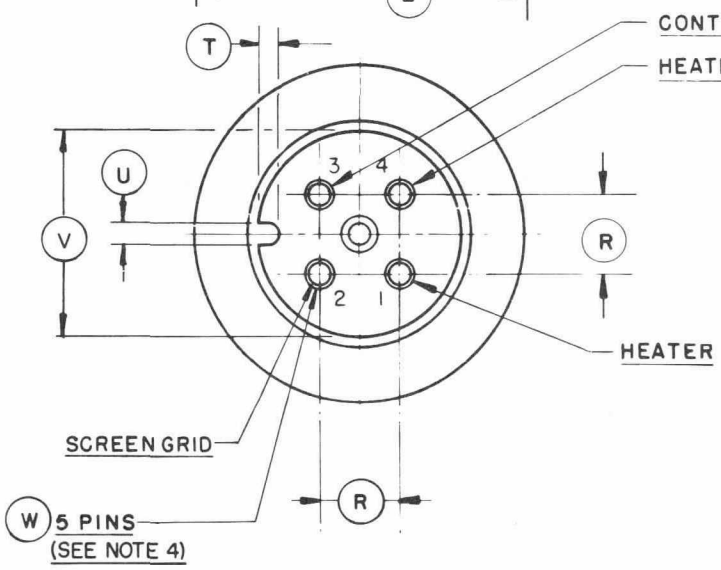

NOTES:

1. DIMENSIONS IN INCHES.
2. (*) CONTACT AREA.
3. (**) DEFINES CYLINDRICAL AREA AVAILABLE FOR CLAMPING WHICH MUST NOT BE DISTORTED BY CLAMPING ACTION.
4. THE BASE PINS SHALL BE CAPABLE OF ENTERING A GAUGE 1/4 INCH THICK HAVING FOUR .214" DIA. HOLES LOCATED ON 11/16 CENTERS AND A CENTER HOLE .250 DIA

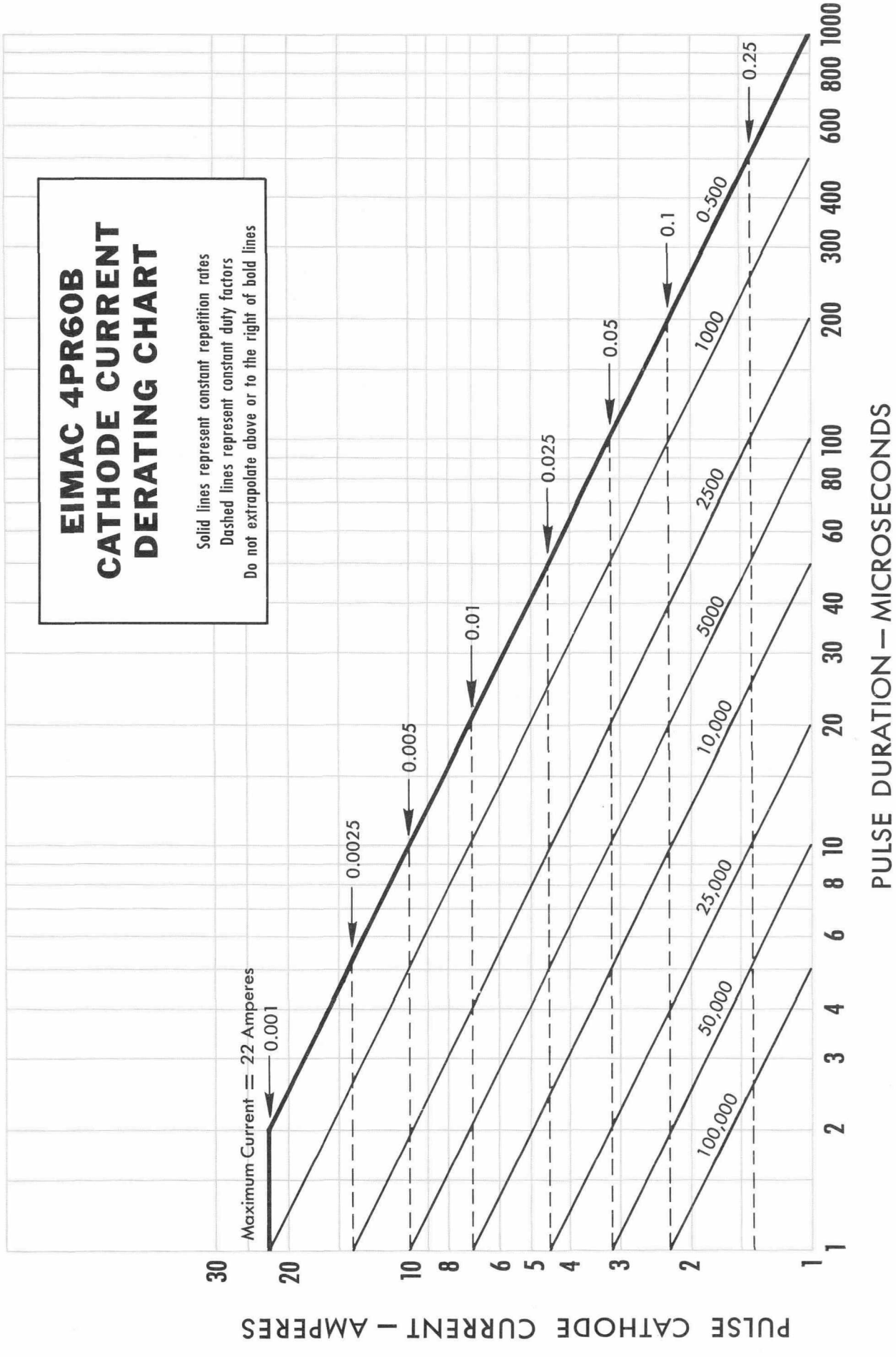
EIMAC 4PR60B
CATHODE CURRENT
DERATING CHART
Solid lines represent constant repetition rates
Dashed lines represent constant duty factors
Do not extrapolate above or to the right of bold lines
Maximum Current = 22 Amperes
0.001
0.0025
0.005
0.01
0.025
0.05
0.1
0.500
0.25
1000
2500
5000
10,000
25,000
50,000
100,000
PULSE CATHODE CURRENT — AMPERES
30
20
10
8
6
5
4
3
2
1
PULSE DURATION—MICROSECONDS
1
2
3
4
6
8
10
20
30
40
60
80
100
200
300
400
600
800
1000

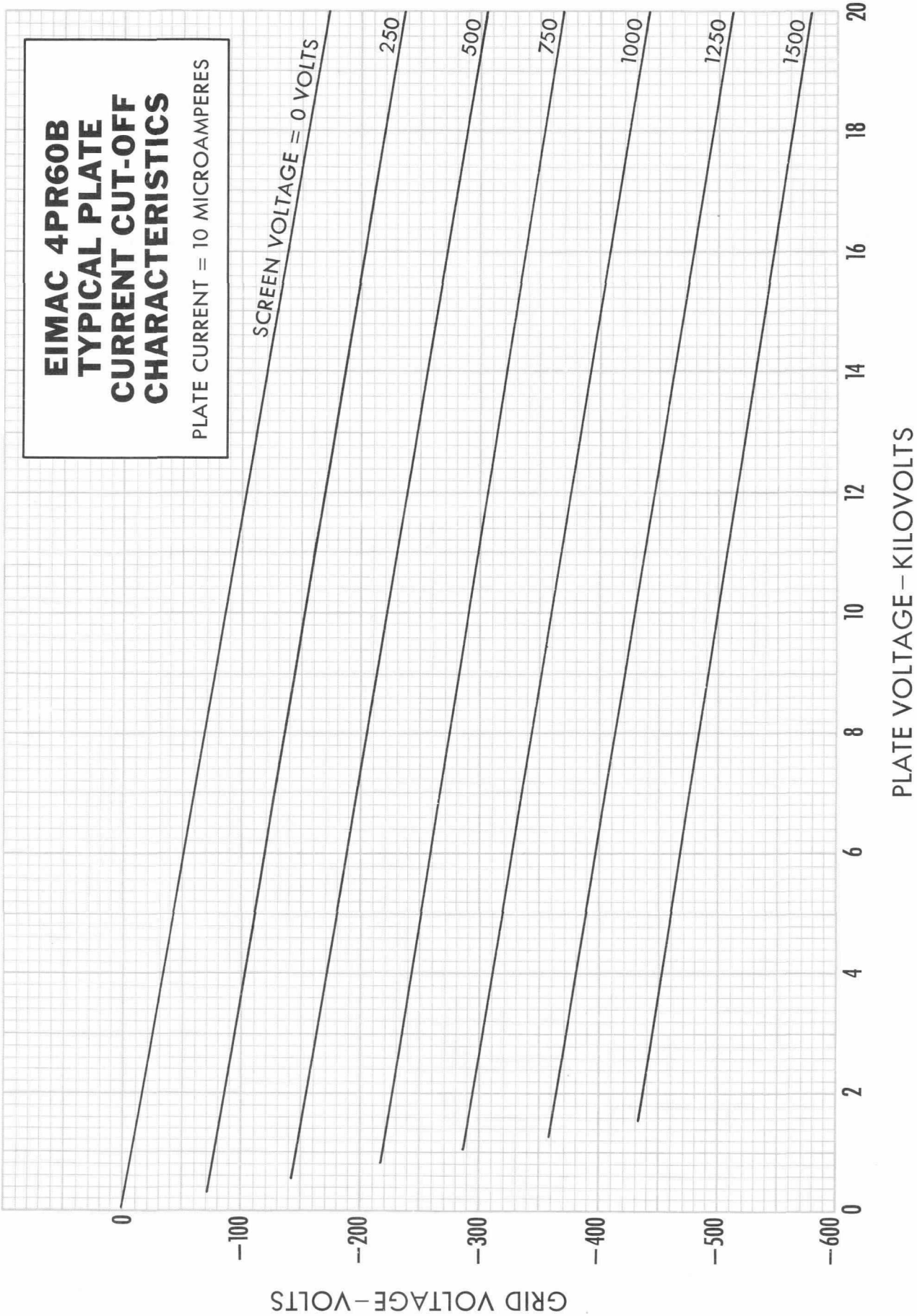
EIMAC 4PR60B
TYPICAL PLATE
CURRENT CUT-OFF
CHARACTERISTICS
PLATE CURRENT = 10 MICROAMPERES
SCREEN VOLTAGE = 0 VOLTS
250
500
750
1000
1250
1500
0
2
4
6
8
10
12
14
16
18
20
PLATE VOLTAGE–KILOVOLTS
0
−100
−200
−300
−400
−500
−600
GRID VOLTAGE–VOLTS

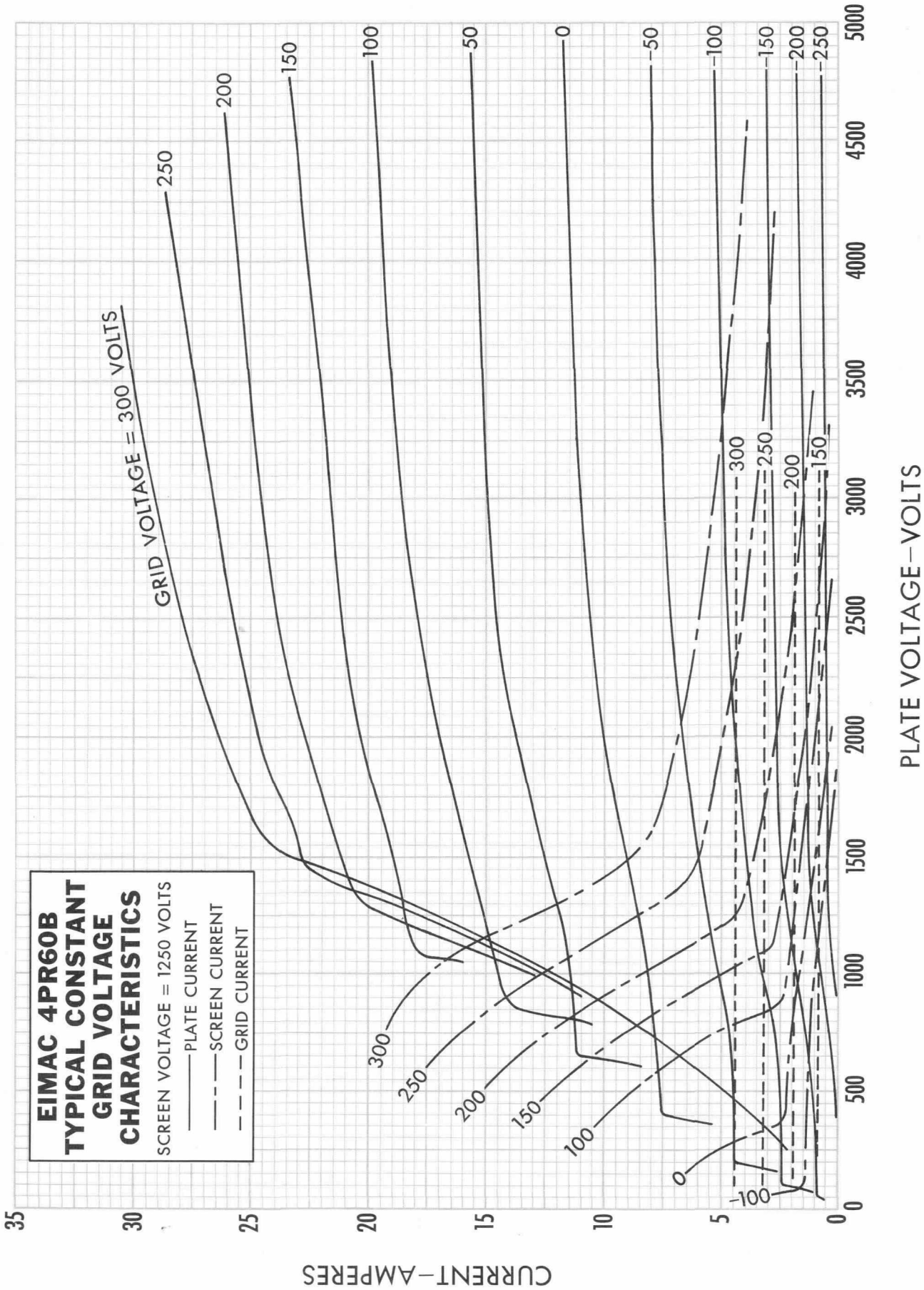
EIMAC 4PR60B
TYPICAL CONSTANT
GRID VOLTAGE
CHARACTERISTICS
SCREEN VOLTAGE = 1250 VOLTS
PLATE CURRENT
SCREEN CURRENT
GRID CURRENT
GRID VOLTAGE = 300 VOLTS
250
200
150
100
50
0
-50
-100
-150
-200
-250
300
250
200
150
100
0
-100
300
250
200
150
0
500
1000
1500
2000
2500
3000
3500
4000
4500
5000
PLATE VOLTAGE–VOLTS
0
5
10
15
20
25
30
35
CURRENT–AMPERES