TECHNICAL DATA

8244
4CW2000A

CERAMIC
POWER TETRODE

The EIMAC 8244/4CW2000A is a ceramic/metal water cooled radial-beam tetrode with a rated maximum plate dissipation of 2000 watts. It is a low-voltage high current tube designed for Class AB1 rf linear amplifier or audio amplifier applications where its high gain may be used to advantage. It is also recommended for voltage or current regulator service. As a regulator, the maximum dc plate voltage rating is 6000 volts. The 8244/4CW2000A is the water-cooled version of the 8168/4CX1000A.

GENERAL CHARACTERISTICS[1]

ELECTRICAL

Cathode: Oxide-coated Unipotential	
Heater Voltage	6.0 ± 0.3 V
Heater Current, at 6.0 volts	9.0 A
Transconductance (Average):	
I_b = 1.0 Adc, E_{c2} = 325 Vdc	37,000 μmhos
Amplification Factor (Average):	
Grid to Screen	3.8
Direct Interelectrode Capacitance (grounded cathode)[2]	
Cin	81.5 pF
Cout	11.8 pF
Cgp	0.015 pF
Frequency of Maximum Rating:	
CW	110 MHz

1. Characteristics and operating values are based on performance tests. These figures may change without notice as the result of additional data or product refinement. EIMAC Division of Varian should be consulted before using this information for final equipment design.
2. Capacitance values are for a cold tube as measured in a special shielded fixture in accordance with Electronic Industries Association Standard RS-191.

MECHANICAL

Maximum Overall Dimensions:	
Length	5.69 in; 144.5 mm
Diameter	2.66 in; 67.6 mm
Net Weight	27 oz; 766 gm
Operating Position	Vertical
Maximum Operating Temperature:	
Ceramic/Metal Seals	250°C
Cooling	Water
Base	Special, breechlock terminal surfaces
Recommended Socket	EIMAC SK-800 Series

(Revised 6-15-71) © 1963,1966 by Varian Printed in U.S.A.

RADIO FREQUENCY LINEAR AMPLIFIER GRID DRIVEN

Class AB_1 or B (Single Side-Band Suppressed-Carrier Operation)

ABSOLUTE MAXIMUM RATINGS:

DC PLATE VOLTAGE	3000	VOLTS
DC SCREEN VOLTAGE	400	VOLTS
DC PLATE CURRENT	1.0	AMPERE
PLATE DISSIPATION	2000	WATTS
SCREEN DISSIPATION	12	WATTS
GRID DISSIPATION	0	WATTS

TYPICAL OPERATION (Frequencies to 30 MHz)
Class AB_1, Grid Driven, Peak Envelope or Modulation Crest Conditions

Plate Voltage	2000	2500	3000	Vdc
Screen Voltage	325	325	325	Vdc
Grid Voltage[1]	-60	-60	-60	Vdc
Zero-Signal Plate Current	250	250	250	mAdc
Single-Tone Plate Current[2]	890	885	875	mAdc
Two-Tone Plate Current[2]	645	650	635	mAdc
Zero-Signal Screen Current[2]	8	6	5	mAdc
Single-Tone Screen Current[2]	35	35	35	mAdc
Two-Tone Screen Current[2]	10	8	8	mAdc
Plate Output Power	930	1300	1630	W

1. Adjust to specified zero-signal dc plate current.
2. Approximate value.

AUDIO FREQUENCY POWER AMPLIFIER OR MODULATOR

Class AB , Grid Driven, Sinusoidal Wave

ABSOLUTE MAXIMUM RATINGS (per tube)

DC PLATE VOLTAGE	3000	VOLTS
DC SCREEN VOLTAGE	400	VOLTS
DC PLATE CURRENT	1.0	AMPERE
PLATE DISSIPATION	2000	WATTS
SCREEN DISSIPATION	12	WATTS
GRID DISSIPATION	0	WATTS

TYPICAL OPERATION (Two Tubes)

Plate Voltage	2000	2500	3000	Vdc
Screen Voltage	325	325	325	Vdc
Grid Voltage[1]	-60	-60	-60	Vdc
Zero-Signal Plate Current	500	500	500	mAdc
Maximum-Signal Plate Current	1.78	1.77	1.75	Adc
Zero-Signal Screen Current[2]	16	12	10	mAdc
Maximum-Signal Screen Current[2]	70	70	70	mAdc
Plate Output Power	1860	2600	3260	W
Load Resistance (Plate to Plate)	2040	2850	3860	Ω

1. Adjust to give stated zero-signal plate current.
2. Approximate value.

NOTE: TYPICAL OPERATION data are obtained from direct measurement or by calculation from published characteristic curves. Adjustment of the rf grid voltage to obtain the specified plate current at the specified bias, screen and plate voltages is assumed. If this procedure is followed, there will be little variation in output power when the tube is changed, even though there may be some variation in grid and screen current. The grid and screen currents which result when the desired plate current is obtained are incidental and vary from tube to tube. These current variations cause no difficulty so long as the circuit maintains the correct voltage in the presence of the variations in current. In the case of Class C Service, if grid bias is obtained principally by means of a grid resistor, the resistor must be adjustable to obtain the required bias voltage when the correct rf grid voltage is applied.

RANGE VALUES FOR EQUIPMENT DESIGN

	Min.	Max.	
Heater: Current at 6.0 volts	8.1	9.9	A
Cathode Warmup Time	3.0	---	Min.
Amplification Factor (g1 to g2)	3.2	4.5	---
Interelectrode Capacitance (grounded cathode connection)[1]			
Cin	75.0	88.0	pF
Cout	10.8	12.8	pF
Cgp	---	0.022	pF

1. Capacitance values are for a cold tube as measured in a special shielded fixture in accordance with Electronic Industries Association Standard RS-191.

APPLICATION

MECHANICAL

COOLING - Sufficient cooling must be provided for the anode and ceramic/metal seals to maintain operating temperatures below the rated maximum value of 250°C.

Anode cooling is accomplished by circulating water through the integral water jacket. The tabulation below lists the minimum water flow requirements for 50°C inlet water temperature.

Plate Dissipation (Watts)	Water Flow (gpm)	Pressure Drop (psi)
1000	1.0	1.0
2000	2.0	2.5

Water pressure should never exceed 50 psi and outgoing water temperature must be limited to 70°C.

At ambient temperatures of 25°C, or less, when mounted in an EIMAC SK-800B socket, the 4CW2000A does not require base cooling. At higher temperatures, however separate base cooling may be required.

In cases where there is any doubt regarding the adequacy of the supplied cooling, it should be borne in mind that operating temperature is the sole criterion of cooling effectiveness. Surface temperatures may be easily and effectively measured by using one of the several temperature-sensitive paints or sticks available from various chemical or scientific equipment suppliers. When these materials are used, extremely thin applications must be made to avoid interference with the transfer of heat from the tube to the air stream, which would cause inaccurate indications.

SHOCK AND VIBRATION - The 4CW2000A has the same internal construction as the EIMAC 4CX1000A, and both are capable of operation under vibration conditions at 10 g to 500 Hz, or long-duration shock (11 milliseconds) of 50 g, with full rated voltages applied.

When environmental stress is anticipated, care must be taken in mounting of the tube and socket so there is sufficient support for the tube to prevent relative motion between tube and socket under stress conditions. The socket is not designed to provide sole support for the tube during shock or vibrational stress.

ELECTRICAL

HEATER - The rated heater voltage for the 4CW2000A is 6.0 volts. The voltage, as measured at the socket, should be maintained at this value to minimize variations in operation and to obtain maximum tube life. In no case should the voltage be allowed to exceed 5% above or below the rated value.

The cathode and one side of the heater are internally connected.

It is recommended that the heater voltage be applied for a period of not less than 3 minutes before other operating voltages are applied. From an initial cold condition, tube operation will stabilize after a period of approximately 5 minutes.

GRID OPERATION - The grid dissipation rating of the 4CW2000A is zero watts. The design features which make the tube capable of maximum power operation without driving the grid into the positive region also make it necessary to avoid positive grid operation.

Although the average grid current rating is zero, peak grid currents of less than five milliamperes as read on a five milliampere meter may be permitted to flow for peak signal monitoring purposes.

SCREEN OPERATION - Tetrode tubes may exhibit reversed screen current to a greater or lesser degree depending on individual tube design. This characteristic is prominent in the 4CW2000A and, under some operating conditions, indicated negative screen currents in the order of 25 milliamperes may be encountered.

The maximum rated power dissipation for the screen grid in the 4CW2000A is 12 watts and the screen power should be kept below this level. The product of the peak screen voltage and the indicated dc screen current approximates the screen input power except when the screen current indication is near zero or negative. In the usual tetrode amplifier, where no signal voltage appears between cathode and screen, the peak screen voltage is equal to the dc screen voltage. Experience has shown that the screen will operate within the limits established for this tube if the indicated screen current, plate voltage and drive voltage approximate the "Typical Operation" values.

The screen supply voltage must be main-

tained constant for any values of negative and positive screen currents that may be encountered. Dangerously high plate currents may flow if the screen power supply exhibits a rising voltage characteristic with negative screen current. Stabilization may be accomplished in sevveral different ways. A bleeder resistor may be connected from screen or cathode; a combination of VR tubes may be connected from screen to cathode; or an electron-tube regulator circuit may be used in the screen supply. It is absolutely essential to use a bleeder if a series electron-tube regulator is employed. The screen bleeder current should approximate 70 milliamperes to adequately stabilize the screen voltage. It should be observed that this bleeder power may be usefully employed to energize low-power stages of the transmitter.

PLATE OPERATION - The maximum rated plate dissipation power is 2000 watts. Except for brief periods during circuit adjustments, this maximum value should not be exceeded.

VOLTAGE OR CURRENT REGULATOR - The 4CW2000A is attractive for regulator service. As a voltage or current regulator the dc plate voltage rating is increased to 6000 volts. All other ratings remain the same.

HIGH VOLTAGE - The 4CW2000A operates at voltages which can be deadly, and the equipment must be designed properly and operating precautions must be followed. Equipment must be designed so that no one can come in contact with high voltages. All equipment must include safety enclosures for high-voltage circuits and terminals, with interlock switches to open the primary circuits of the power supplies and to discharge high voltage condensers whenever access doors are opened. Interlock switches must not be bypassed or "cheated" to allow operation with access doors open. Always remember that HIGH VOLTAGE CAN KILL

INTERELECTRODE CAPACITANCE - The actual internal interelectrode capacitance of a tube is influenced by many variables in most applications, such as stray capacitance to the chassis, capacitance added by the socket used, stray capacitance between tube terminals, and wiring effects. To control the actual capacitance values within the tube, as the key component involved, the industry and the Military Services use a standard test procedure as described in Electronic Industries Association Standard RS-191. This requires the use of specially constructed test fixtures which effectively shield all external tube leads from each other and eliminates any capacitance reading to "ground". The test is performed on a cold tube. Other factors being equal, controlling internal tube capacitance in this way normally assures good interchangeability of tubes over a period of time, even when the tube may be made by different manufacturers. The capacitance values shown in the manufacturer's technical data, or test specifications, normally are taken in accordance with Standard RS-191.

The equipment designer is therefore cautioned to make allowance for the actual capacitance values which will exist in any normal application. Measurements should be taken with the socket and mounting which represent approximate final layout if capacitance values are highly significant in the design.

SPECIAL APPLICATIONS - If it is desired to operate this tube under conditions different from those given here, write to the Application Engineering Department, EIMAC Division of Varian, San Carlos, California, 94070, for information and recommendations.

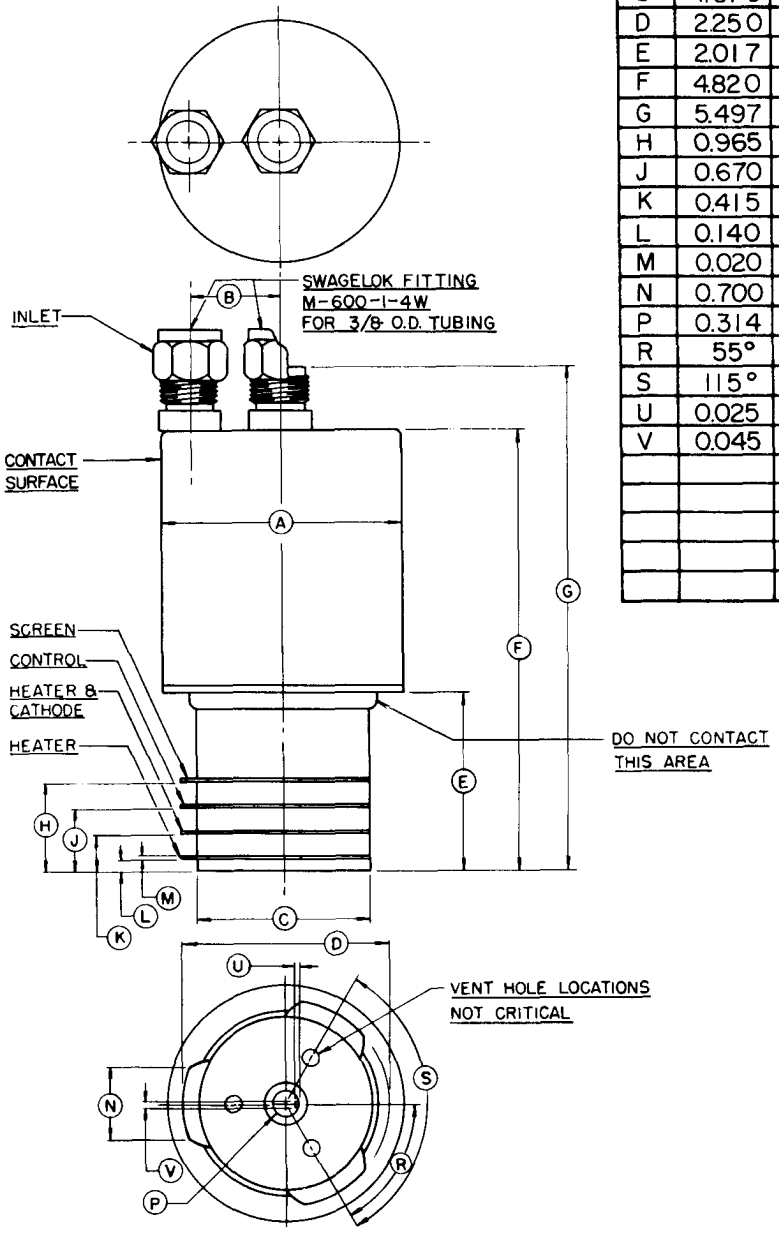

DIMENSIONAL DATA

DIM.	INCHES			MILLIMETERS		
	MIN.	MAX.	REF.	MIN.	MAX.	REF
A	2.609	2.663	- -	66.27	66.88	- -
B	- -	- -	0.984	- -	- -	24.99
C	1.870	1.900	- -	47.50	48.26	- -
D	2.250	2.300	- -	57.15	58.42	- -
E	2.017	2.153	- -	51.23	54.69	- -
F	4.820	4.960	- -	122.43	125.98	- -
G	5.497	5.685	- -	139.62	144.40	- -
H	0.965	0.988	- -	24.51	25.10	- -
J	0.670	0.710	- -	17.02	18.03	- -
K	0.415	0.435	- -	10.54	11.05	- -
L	0.140	0.165	- -	3.56	4.19	- -
M	0.020	0.030	- -	0.51	0.76	- -
N	0.700	0.800	- -	17.78	20.32	- -
P	0.314	0.326	- -	7.98	8.28	- -
R	55°	65°	- -	55°	65°	- -
S	115°	125°	- -	115°	125°	- -
U	0.025	0.048	- -	0.64	1.22	- -
V	0.045	0.070	- -	1.14	1.78	- -

NOTES:
1. REF. DIMENSIONS ARE FOR INFO. ONLY & ARE NOT REQUIRED FOR INSPECTION PURPOSES.

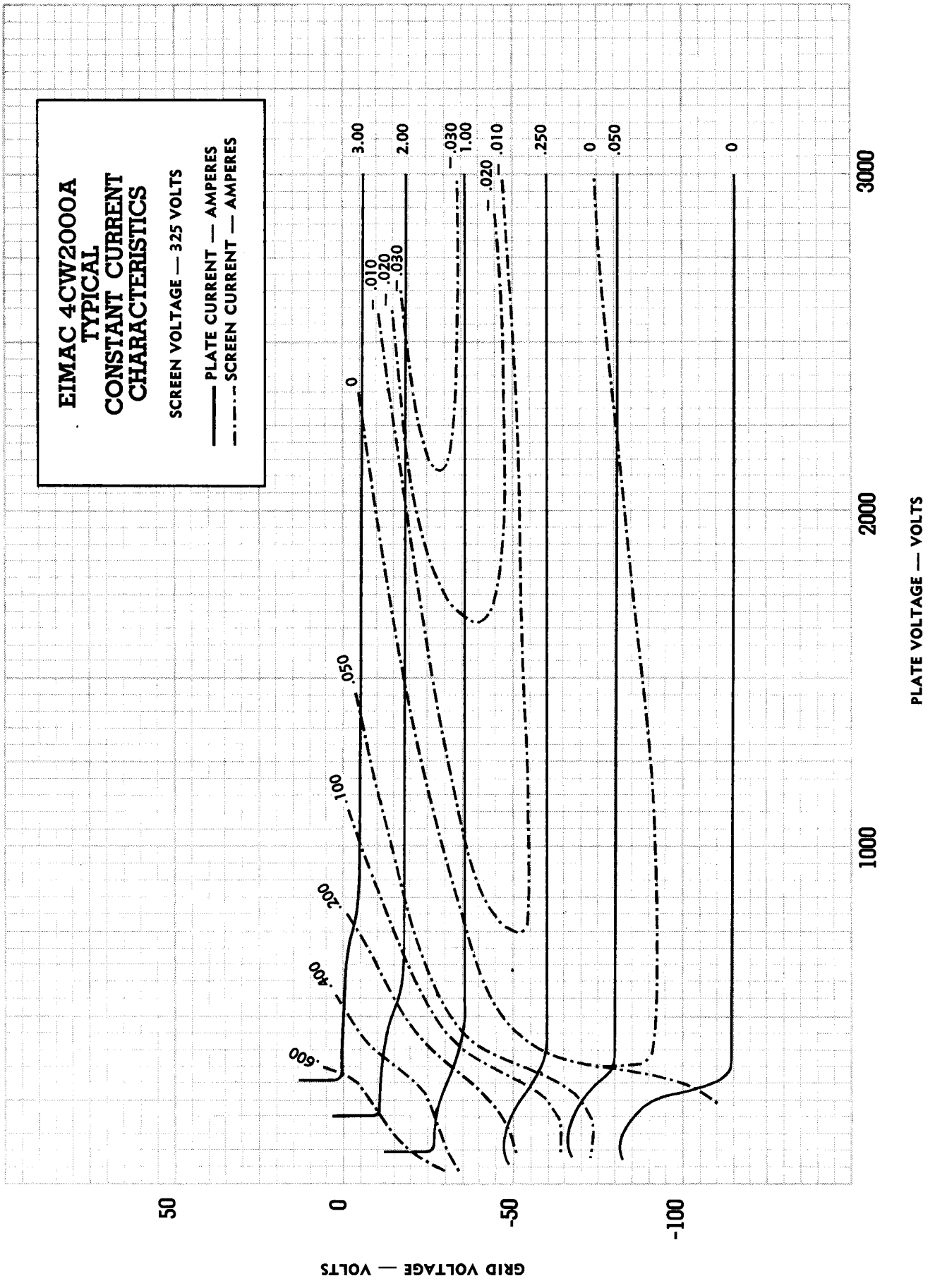
EIMAC 4CW2000A
TYPICAL
CONSTANT CURRENT
CHARACTERISTICS
SCREEN VOLTAGE — 325 VOLTS
PLATE CURRENT — AMPERES
SCREEN CURRENT — AMPERES
3.00
2.00
1.00
.250
0
.050
0
.030
.020
.010
0
.010
.020
.030
.050
.100
.200
.400
.600
1000
2000
3000
PLATE VOLTAGE — VOLTS
50
0
-50
-100
GRID VOLTAGE — VOLTS