EITEL-McCULLOUGH, INC.
SAN CARLOS, CALIFORNIA

8243
3W5000F3

MEDIUM-MU POWER TRIODE

The Eimac 8243/3W5000F3 is a water-cooled, medium-mu power triode intended for amplifier, oscillator or modulator service. It has a maximum plate dissipation rating of 5000 watts and is capable of high output at relatively low plate voltages. A single 3W5000F3 will deliver a radio frequency plate power-output of 7500 watts at a plate voltage of 4000 volts.

The tube is equipped with flexible filament and grid leads which simplifies socketing and equipment design for industrial and communication frequencies below 30 Mc.

NOTE: The 8243/3W5000F3 is a water-cooled version of the air-cooled 8251/3X2500F3.

The 8243/3W5000F3 should be used where water cooling is preferred and for industrial applications or installations where reserve anode dissipation is desired.

GENERAL CHARACTERISTICS

ELECTRICAL

	Min.	Nom.	Max.	
Filament: Thoriated tungsten				
Voltage		7.5		volts
Current	49		54	amperes
Maximum allowable starting current			100	amperes
Amplification Factor (Average)		20		
Direct Interelectrode Capacitances (Average)				
Grid-Plate	17.8		24.2	μμf
Grid-Filament	29.2		40.2	μμf
Plate-Filament	0.60		1.20	μμf
Transconductance (I_b=830 ma, E_b=3000v)		20,000		μmhos
Frequency for Maximum Ratings			30	mc

MECHANICAL

Base	see drawing	
Mounting	vertical, base down or up	
Maximum Over-All Dimensions:		
Length (Does not include filament connectors)	12.56	inches
Diameter	3.63	inches
Net Weight	4.8	pounds
Shipping Weight (Average)	15	pounds
Cooling	Water and forced air	

RADIO FREQUENCY POWER AMPLIFIER OR OSCILLATOR

(Frequencies below 30 Mc.)

Class-C FM or Telegraphy

(Key-down conditions, per tube)

MAXIMUM RATINGS

D-C PLATE VOLTAGE	6000 MAX. VOLTS
D-C PLATE CURRENT	2.5 MAX. AMPS
PLATE DISSIPATION	5000 MAX. WATTS
GRID DISSIPATION	150 MAX. WATTS

TYPICAL OPERATION
(Frequencies below 30 Mc., per tube)

D C Plate Voltage	4000	5000	6000	volts
D-C Plate Current	2.5	2.5	2.08	amps
D-C Grid Voltage	—300	—450	—500	volts
D-C Grid Current	245	265	180	ma
Peak R-F Grid Input Voltage	580	750	765	volts
Driving Power (approx.)	142	197	136	watts
Grid Dissipation	68	78	46	watts
Plate Power Input	10,000	12,500	12,500	watts
Plate Dissipation	2500	2500	2500	watts
Plate Power Output	7500	10,000	10,000	watts

PLATE MODULATED RADIO FREQUENCY AMPLIFIER

(Frequencies below 30 Mc.)

Class-C Telephony

(Carrier conditions, per tube)

MAXIMUM RATINGS

D-C PLATE VOLTAGE	5000 MAX. VOLTS
D-C PLATE CURRENT	2.0 MAX. AMPS
PLATE DISSIPATION	3350 MAX. WATTS
GRID DISSIPATION	150 MAX. WATTS

TYPICAL OPERATION
(Frequencies below 30 Mc., per tube)

D C Plate Voltage	4000	4500	5000	volts
D-C Plate Current	1.67	1.55	1.45	amps
Total Bias Voltage	—450	—500	—550	volts
Fixed Bias Voltage	—230	—325	—410	volts
Grid Resistor	1500	1500	1400	ohms
D-C Grid Current	150	120	100	ma
Peak R-F Grid Input Voltage	680	720	760	volts
Driving Power (approx.)	102	86	76	watts
Grid Dissipation	35	26	21	watts
Plate Power Input	6670	6970	7250	watts
Plate Dissipation	1670	1670	1670	watts
Plate Power Output	5000	5300	5580	watts

(Effective 10-20-61) Copyright 1962 by Eitel-McCullough, Inc., Printed in U.S.A.

AUDIO FREQUENCY POWER AMPLIFIER AND MODULATOR

Class B (Sinusoidal wave, two tubes unless otherwise specified)

MAXIMUM RATINGS

D-C PLATE VOLTAGE	6000 MAX. VOLTS
MAX-SIGNAL D-C PLATE CURRENT, PER TUBE	2.5 MAX. AMPS
PLATE DISSIPATION, PER TUBE	5000 MAX. WATTS

TYPICAL OPERATION (Sinusoidal wave, two tubes unless noted)

D-C Plate Voltage	4000	5000	6000	volts
D-C Grid Voltage[1]	—150	—190	—240	volts
Zero-Signal D-C Plate Current	0.6	0.5	0.4	amps
Max-Signal D-C Plate Current	4.0	3.2	3.0	amps
Effective Load, Plate to Plate	2200	3600	4650	ohms
Peak A-F Grid Input Voltage (per tube)*	340	360	390	volts
Max-Signal Peak Driving Power*	340	230	225	watts
Max-Signal Nominal Driving Power*	170	115	113	watts
Max-Signal Plate Output Power	11,000	11,000	13,000	watts

*Approximate values.

[1]Adjust to give listed zero-signal plate current.

TYPICAL OPERATION CLASS AB_2 (Two Tubes)

Modulator service for 4000 and 5000 volt operation, to modulate one or two tubes, as shown under "Plate Modulated Radio Frequency Amplifier" (Page 1)

D-C Plate Voltage	4000	5000	4000	5000	volts
D-C Grid Voltage (approx.)*	—155	—200	—145	—190	volts
Zero-Signal D-C Plate Current	0.4	0.4	0.6	0.5	amps
Max-Signal D-C Plate Current	1.35	1.13	2.70	2.26	amps
Effective Load, Plate to Plate	6600	10,000	3300	5000	ohms
Peak A-F Grid Input Voltage (per tube)	240	275	285	310	volts
Max-Signal Peak Driving Power	42	40	134	118	watts
Max-Signal Nominal Driving Power (approx.)	21	20	67	59	watts
Max-Signal Plate Power Output	3700	4000	7400	8000	watts
Will Modulate one Tube R-F Final Input of	6670	7250			watts
Will Modulate two tubes R-F Final Input of			13,340	14,500	watts

*Adjust to give stated zero-signal plate current.

IF IT IS DESIRED TO OPERATE THIS TUBE UNDER CONDITIONS WIDELY DIFFERENT FROM THOSE GIVEN UNDER "TYPICAL OPERATION," POSSIBLY EXCEEDING THE MAXIMUM RATINGS GIVEN FOR CW SERVICE, WRITE EITEL-McCULLOUGH, INC., FOR INFORMATON AND RECOMMENDATIONS

APPLICATION

▶ **Cooling**— Minimum recommended water-flow rate and pressure drop values for different water-inlet temperatures and plate dissipations are tabulated on the opposite page. The outlet water temperature must not exceed a maximum of 70° C under any conditions. The inlet water pressure must not exceed a maximum of 60 pounds per square inch.

The grid-terminal contact surface and adjacent glass must be cooled by forced air. The quantity, velocity and direction must be adjusted to limit the maximum seal temperature to 150° C.

The filament stem structure also requires forced-air cooling. A minimum of 6 cubic feet per minute must be directed into the space between the inner and outer filament contacting surfaces.

Air and water flow must be started before filament power is applied and maintained for at least five minutes after the filament power has been removed.

Filament Voltage—The filament voltage, as measured directly at the tube, should be 7.5 volts with maximum allowable variations due to line fluctuation of from 7.12 to 7.87 volts.

Bias Voltage—There is little advantage in using bias voltages in excess of those given under "Typical Operation," except in certain very specialized applications. Where bias is obtained from a grid resistor, suitable protective means must be provided to prevent excessive plate dissipation in the event of loss of excitation.

Plate Voltage — The plate supply voltage for the 3W5000F3 should not exceed 6000 volts. In most cases there is little advantage in using plate-supply voltages higher than those given under "Typical Operation" for the power output desired.

In Class-C FM or Telegraphy service, a 0.1 henry choke, shunted by a spark gap, should be series connected between the plates of the amplifier tubes and the high voltage plate supply capacitor to offer protection from transients and surges. In plate modulated service, where a plate modulation transformer is used, the protective choke is not normally required.

Grid Dissipation—The power dissipated by the grid of the 3W5000F3 must never exceed 150 watts. Grid dissipation may be calculated from the following expression

$$P_g = e_{cmp} I_c$$

where P_g = Grid dissipation,
e_{cmp} = Peak positive grid voltage, and
I_c = D-C grid current

e_{cmp} may be measured by means of a suitable peak voltmeter connected between filament and grid. Any suitable peak v.t.v.m. circuit may be used.

In equipment in which the plate loading varies widely, such as oscillators used for radio-frequency heating, care should be taken to make certain that the grid dissipation does not exceed the maximum rating under any condition of loading.

▶ Indicates change from sheet dated 8-26-58

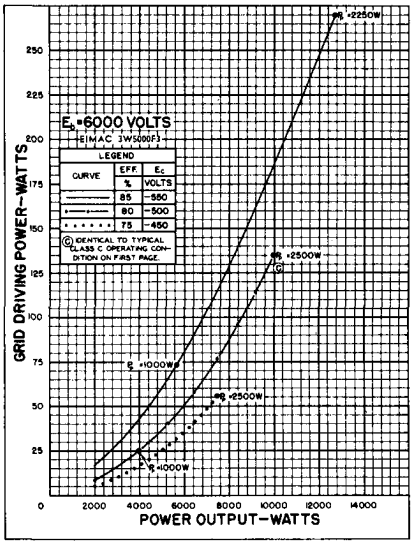

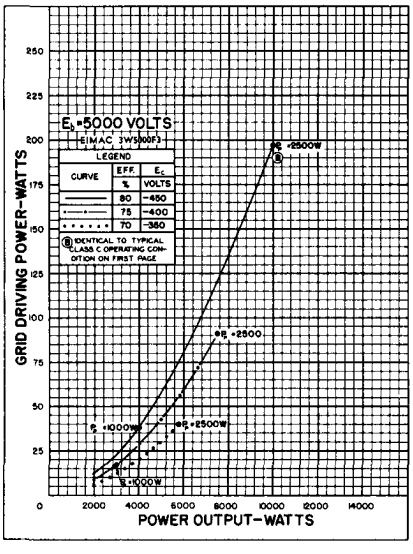

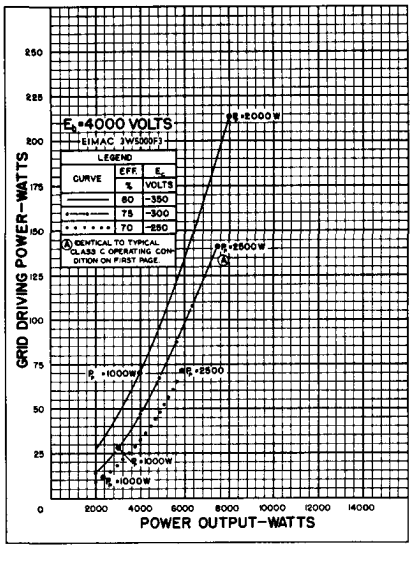

▶ Indicates change from sheet dated 8-26-58

MINIMUM WATER COOLING REQUIREMENTS								
Water Inlet Temp. (°C)	Plate Dissipation							
	2 KW		3 KW		4 KW		5 KW	
	Flow Rate GPM	Pressure Drop PSI	Flow Rate GPM	Pressure Drop PSI	Flow Rate GPM	Pressure Drop PSI	Flow Rate GPM	Pressure Drop PSI
20	1.7	0.68	2.6	1.3	3.9	2.3	5.6	3.9
30	2.3	1.1	3.2	1.7	4.5	2.8	6.2	4.5
40	3.0	1.6	3.8	2.2	5.3	3.5	6.9	5.3
50	3.9	2.3	4.7	3.0	6.0	4.3	7.7	6.1

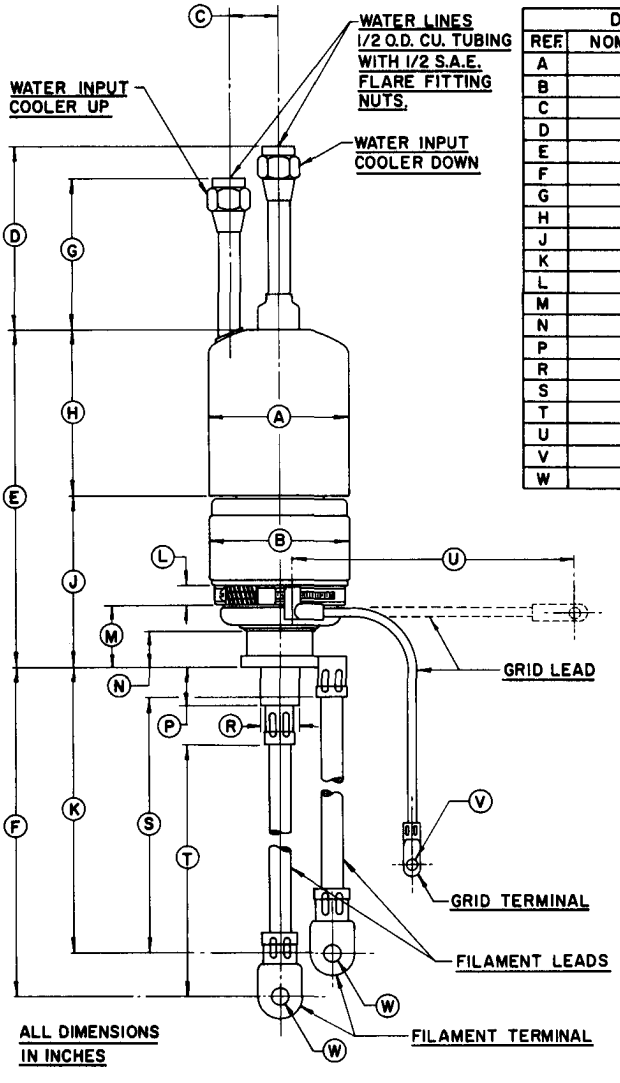

DIMENSION DATA			
REF.	NOM.	MIN.	MAX.
A		3.234	3.266
B			3.625
C		1.062	1.187
D		4.000	4.500
E		7.562	8.062
F		8.937	9.437
G		3.250	3.750
H		3.625	3.875
J		3.937	4.187
K		7.937	8.437
L		.375	.437
M		1.437	1.562
N		.812	.937
P		.812	.937
R		.859	.890
S		7.000	7.500
T		7.000	7.500
U		6.375	6.625
V		.194	.200
W		.385	.395

DRIVING POWER vs. POWER OUTPUT

The three charts on this page show the relationship of plate efficiency, power output and approximate grid driving power at plate voltages of 4000, 5000 and 6000 volts. These charts show combined grid and bias losses only. The driving-power and power-output figures do not include circuit losses. The plate dissipation in watts is indicated by Pp. Points A, B, and C are identical to the typical Class C operating conditions shown on the first page under 4000, 5000 and 6000 volts respectively.

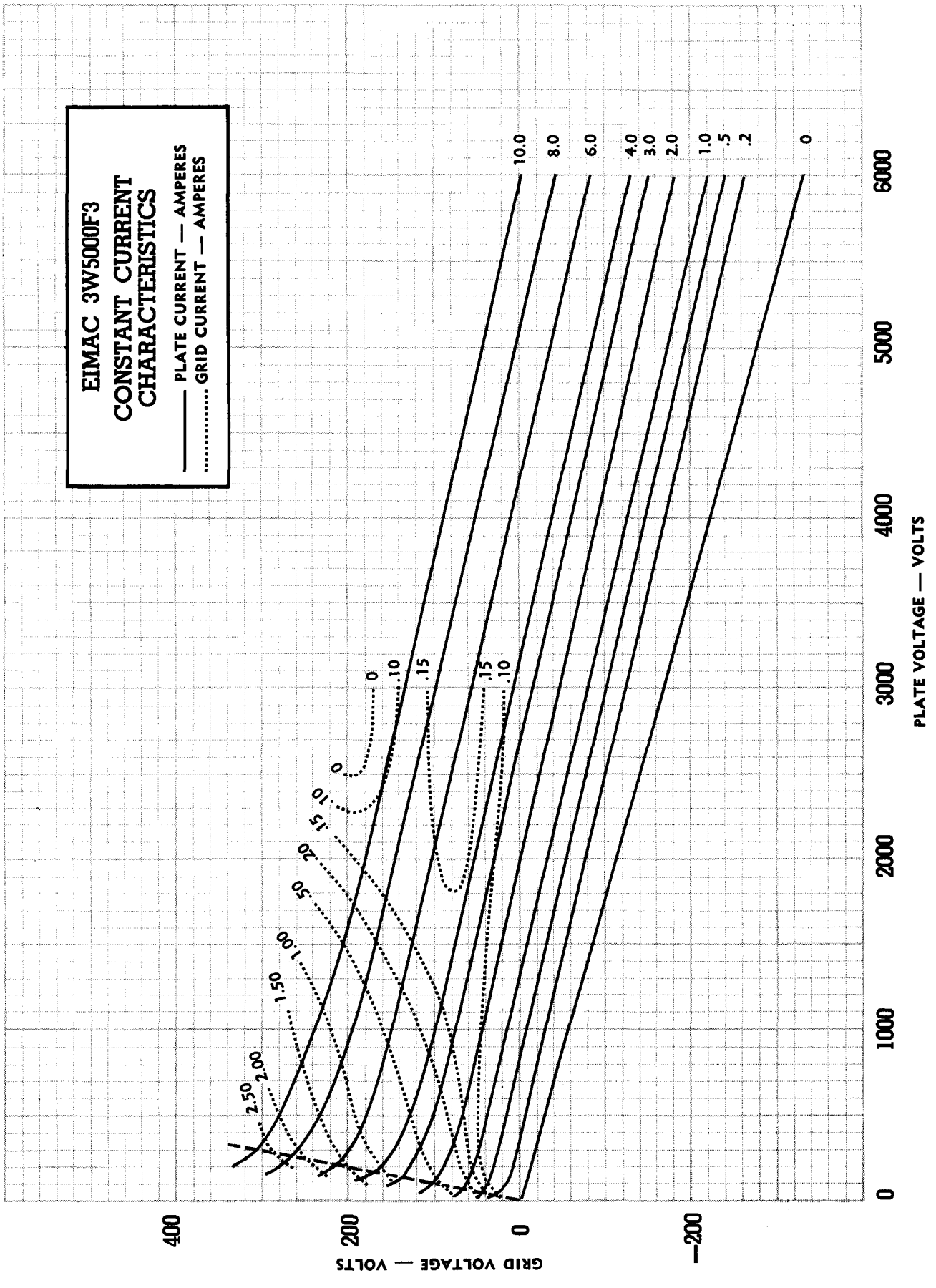
EIMAC 3W5000F3
CONSTANT CURRENT CHARACTERISTICS
PLATE CURRENT — AMPERES
GRID CURRENT — AMPERES
10.0
8.0
6.0
4.0
3.0
2.0
1.0
.5
.2
0
0
.10
.15
.15
.10
0
.10
.15
.20
.50
1.00
1.50
2.00
2.50
PLATE VOLTAGE — VOLTS
0
1000
2000
3000
4000
5000
6000
GRID VOLTAGE — VOLTS
400
200
0
−200