TECHNICAL DATA

8242 3CW5000A3 / 8243 3CW5000F3

MEDIUM-MU WATER-COOLED POWER TRIODES

The EIMAC 8242/3CW5000A3 and 8243/3CW5000F3 are medium-mu water-cooled power triodes intended for use in amplifier, oscillator, or modulator service. Their maximum rated anode dissipation is 5000 watts. The two types are identical except for the addition of flexible leads for the grid and filament terminals of the 8243/3CW5000F3.

These tubes are water-cooled versions of the air-cooled 8161/3CX2500A3 and 8251/3CX2500F3.

The water-cooled tubes are recommended for industrial applications or installations where reserve anode dissipation is required.

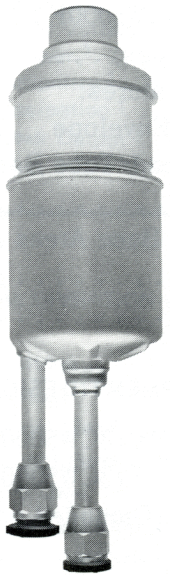

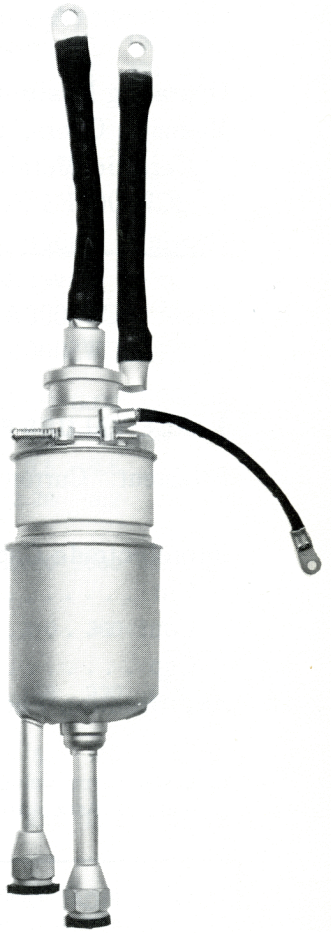

GENERAL CHARACTERISTICS[1]

ELECTRICAL

Filament: Thoriated-tungsten

Voltage	7.5	V
Current @ 7.5 V (3CW5000A3)	51.5	A
(3CW5000F3)	50.5	A
Amplification Factor (Average)	22	
Transconductance (Average) (E_b = 3000 Vdc; I_b = 830 mAdc)	20,000	μmhos

Direct Interelectrode Capacitances (Cathode grounded)[2]

Cin	35	pF
Cout	0.9	pF
Cgp	20	pF

Frequency of Maximum Ratings (CW)

3CW5000A3	F1	75	MHz
	F2	110	MHz
3CW5000F3	F1	30	MHz

1. Characteristics and operating values are based on performance tests. These figures may change without notice as the result of additional data or product refinement. EIMAC Division of Varian should be consulted before using this information for final equipment design.

2. Capacitance values are for a cold tube as measured in a special shielded fixture, in accordance with Electronic Industries Association Standard RS-191.

(Revised 1-11-74) © 1962, 1964, 1967, 1974 by Varian Printed in U.S.A.

MECHANICAL

Maximum Overall Dimensions:	
Length (excluding leads on 3CW5000F3)	12.56 In; 31.9 Cm
Diameter	3.63 In; 9.22 Cm
Net Weight (Approximate) 3CW5000A3	4.8 lb; 2.2 kg
3CW5000F3	5.5 lb; 2.5 kg
Operating Position (both types)	Axis Vertical, Base Down or Up
Maximum Operating Temperatures:	
Ceramic/Metal Seals or Envelope	250°C
3CW5000F3 Filament Lead/Tube Base junctions	150°C
Cooling: Anode	Water or Equivalent Liquid
Envelope, Seals, Base Areas	Forced Air
Base: 3CW5000A3	Special Coaxial
3CW5000F3	Special with Flying Leads

RANGE VALUES FOR EQUIPMENT DESIGN

	Min.	Max.	
Filament: Current @ 7.5 volts (3CW5000A3)	49.0	54.0	A
(3CW5000F3)	48.0	53.0	A
Interelectrode Capacitance (Grounded cathode) [1]			
Cin	29.2	40.2	pF
Cout	0.60	1.20	pF
Cgp	16.8	23.2	pF
Amplification Factor	19	26	

1. Capacitance values are for a cold tube as measured in a special shielded fixture, in accordance with Electronic Industries Association standard RS-191.

NOTE: TYPICAL OPERATION data are obtained by measurement or calculation from published characteristic curves. Adjustment of the rf grid voltage to obtain the specified plate current at the specified bias and plate voltage is assumed. If this procedure is followed, there will be little variation in output power when the tube is changed, even though there may be some variation in grid current. The grid current which results when the desired plate current is obtained is incidental and varies from tube to tube. This current variation causes no difficulty so long as the circuit maintains the correct voltage in the presence of the variations in current. If grid bias is obtained principally by means of a grid resistor, the resistor must be adjustable to obtain the required bias voltage when the correct rf grid voltage is applied.

RADIO FREQUENCY POWER AMPLIFIER OR OSCILLATOR Class C Telegraphy or FM-Grid Driven

ABSOLUTE MAXIMUM RATINGS:

DC PLATE VOLTAGE (up to F1)	6000	VOLTS
DC PLATE VOLTAGE (F1 to F2)	4000	VOLTS
DC PLATE CURRENT	2.5	AMPERES
PLATE DISSIPATION	5000	WATTS
GRID DISSIPATION	150	WATTS

1. Approximate value.
2. Approximate; useful power delivered to the load will be lower because of circuit losses.

TYPICAL OPERATION (Frequencies to 30 MHz)

Plate Voltage	4000	5000	6000	Vdc
Plate Current	2.5	2.5	2.1	Adc
Grid Voltage	-300	-450	-500	Vdc
Grid Current [1]	245	265	180	mAdc
Peak rf Grid Voltage [1]	580	750	765	v
Driving Power [1]	142	197	136	W
Grid Dissipation [1]	68	78	46	W
Plate Power Input	10	12.5	12.5	kW
Plate Dissipation	2.5	2.5	2.5	kW
Plate Power Output [2]	7.5	10	10	kW

PLATE MODULATED RADIO FREQUENCY AMPLIFIER
Class C Telephony - Carrier Conditions

ABSOLUTE MAXIMUM RATINGS:

DC PLATE VOLTAGE (up to F1)	5000	VOLTS
DC PLATE VOLTAGE (F1 to F2)	3500	VOLTS
DC PLATE CURRENT	2.0	AMPERES
PLATE DISSIPATION	3350	WATTS
GRID DISSIPATION	150	WATTS

1. Approximate value.
2. Approximate; useful power delivered to the load will be lower because of circuit losses.

TYPICAL OPERATION (Frequencies to 30 MHz)

Plate Voltage	4000	4500	5000	Vdc
Plate Current	1.67	1.55	1.45	Adc
Total Bias Voltage	-450	-500	-550	Vdc
Fixed Bias Voltage	-230	-325	-410	Vdc
Grid Resistor	1500	1500	1400	Ω
Grid Current	150	120	100	mAdc
Peak rf Grid Voltage[1]	680	720	760	v
Driving Power [1]	102	86	76	W
Grid Dissipation [1]	35	26	21	W
Plate Dissipation [1]	1.67	1.67	1.67	kW
Plate Power Output [2]	5.0	5.3	5.6	kW

AUDIO FREQUENCY POWER AMPLIFIER AND MODULATOR Class AB

ABSOLUTE MAXIMUM RATINGS:

DC PLATE VOLTAGE	6000	VOLTS
DC PLATE CURRENT	2.5	AMPERES
PLATE DISSIPATION	5000	WATTS
GRID DISSIPATION	150	WATTS

1. Approx. Adjust for specified zero-signal plate current.
2. Approximate.

TYPICAL OPERATION (Two Tubes)

Plate Voltage	4000	5000	5000	6000	Vdc
Grid Voltage [1]	-145	-190	-190	-240	Vdc
Zero Signal Plate Current	0.6	0.5	0.5	0.4	Adc
Max. Signal Plate Current	2.70	2.26	3.2	3.0	Adc
Effective Load, plate-to-plate	3300	5000	3600	4650	Ω
Peak af Grid Voltage (per tube) [2]	285	310	360	390	v
Max. Signal Peak Driving Power [2]	134	118	230	225	W
Max. Signal Nom. Driving Power [2]	67	59	115	113	W
Max. Signal Plate Output Power [2]	7.4	8.0	11.0	13.0	kW

APPLICATION

MECHANICAL

MOUNTING - The 3CW5000A3 and 3CW5000F3 must be mounted vertically, base down or up at the convenience of the circuit designer. The filament connections to the 3CW5000A3 should be made through spring collets. These are available from EIMAC with the following part numbers:

149575 Inner line collet;
149576 Outer line collet

Reasonable care should be taken that these collets do not impart undue strain to the terminals or the base of the tube.

COOLING - With an anode dissipation of 5000 watts and with an incoming water temperature of 50°C maximum, 7.7 gpm of cooling water must be supplied to the anode cooling jacket. Outlet water temperature from the cooling jacket should never exceed 70°C, and water pressure on the jacket should not exceed 60 psi. The pressure drop across the anode cooling jacket itself, with a water flow of 7.7 gpm, will be approximately 6 psi. The grid-terminal contact surface and adjacent ceramic must be cooled by forced air, with quantity, velocity, and

direction adjusted to limit the maximum seal temperature to less than 250°C.

The filament stem structure also requires forced-air cooling. A minimum of 6 cfm should be directed into the space between the inner and outer filament contacting surfaces.

Both air and water flow must be supplied before or simultaneously with the application of electrode voltages, including the filament, and may be removed simultaneously with them. Where long life and consistent performance are factors, cooling in excess of minimum requirements is normally beneficial.

ELECTRICAL

FILAMENT OPERATION - The filament voltage, as measured at the filament terminals, should be 7.5 volts, with maximum allowable variations due to line fluctuations of from 7.12 to 7.87 volts.

RADIO FREQUENCY RADIATION - Avoid exposure to strong rf fields even at relatively low frequency. Absorption of rf energy by human tissue is dependent on frequency. Under 30 MHz, most of the energy will pass completely through the human body with little attenuation or heating effect. Public health agencies are concerned with the hazard, however, even at these frequencies, and it is worth noting that some commercial dielectric heating units actually operate at frequencies as low as the 13 and 27 MHz bands.

Many EIMAC power tubes, such as these, are specifically designed to generate or amplify radio frequency power. There may be a relatively strong rf field in the general proximity of the power tube and its associated circuitry--the more power involved, the stronger the rf field. Proper enclosure design and efficient coupling of rf energy to the load will minimize the rf field in the vicinity of the power amplifier unit itself.

HIGH VOLTAGE - Normal operating voltages used with these tubes are deadly, and the equipment must be designed properly and operating precautions must be followed. Design all equipment so that no one can come in contact with high voltages. All equipment must include safety enclosures for high-voltage circuits and terminals, with interlock switches to open primary circuits of the power supply and to discharge high-voltage condensers whenever access doors are opened. Interlock switches must not be bypassed or "cheated" to allow operation with access doors open. Always remember that HIGH VOLTAGE CAN KILL.

INTERELECTRODE CAPACITANCE - The actual internal interelectrode capacitance of a tube is influenced by many variables in most applications, such as stray capacitance to the chassis, capacitance added by the socket used, stray capacitance between tube terminals, and wiring effects. To control the actual capacitance values within the tube, as the key component involved, the industry and the Military Services use a standard test procedure as described in Electronic Industries Association Standard RS-191. This requires the use of specially constructed test fixtures which effectively shield all external tube leads from each other and eliminates any capacitance reading to "ground". The test is performed on a cold tube. Other factors being equal, controlling internal tube capacitance in this way normally assures good interchangeability of tubes over a period of time, even when the tube may be made by different manufacturers. The capacitance values shown in the manufacturer's technical data, or test specifications, normally are taken in accordance with Standard RS-191.

The equipment designer is therefore cautioned to make allowance for the actual capacitance values which will exist in any normal application. Measurements should be taken with the socket and mounting which represent approximate final layout if capacitance values are highly significant in the design.

SPECIAL APPLICATION - If it is desired to operate this tube under conditions widely different from those listed here, write to Power Grid Tube Division, EIMAC Division of Varian, 301 Industrial Way, San Carlos, California 94070, for information and recommendations.

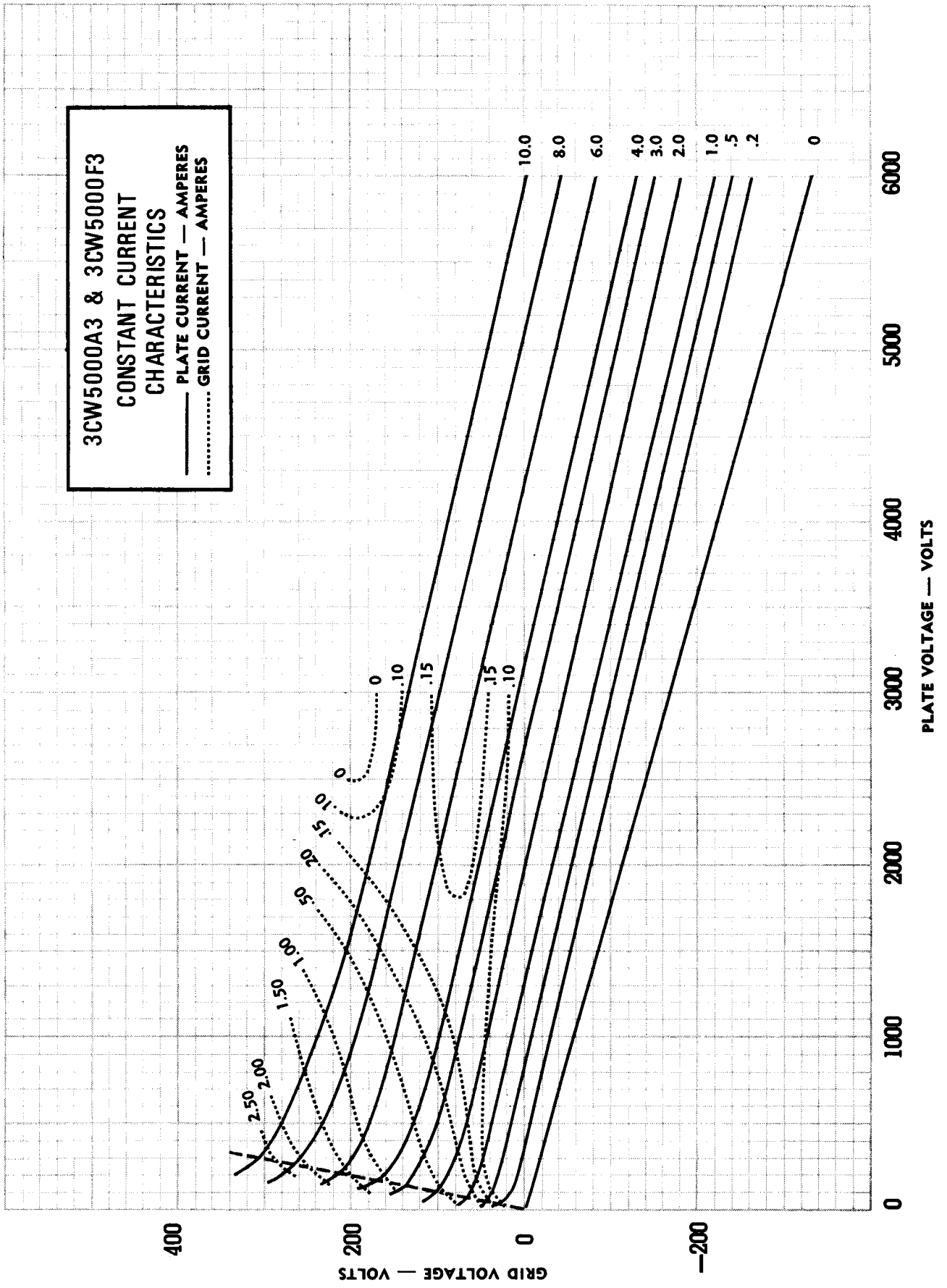
3CW5000A3 & 3CW5000F3
CONSTANT CURRENT
CHARACTERISTICS
PLATE CURRENT — AMPERES
GRID CURRENT — AMPERES
10.0
8.0
6.0
4.0
3.0
2.0
1.0
.5
.2
0
0
.10
.15
.15
.10
0
.10
.15
.20
.50
1.00
1.50
2.00
2.50
PLATE VOLTAGE — VOLTS
0
1000
2000
3000
4000
5000
6000
GRID VOLTAGE — VOLTS
400
200
0
−200

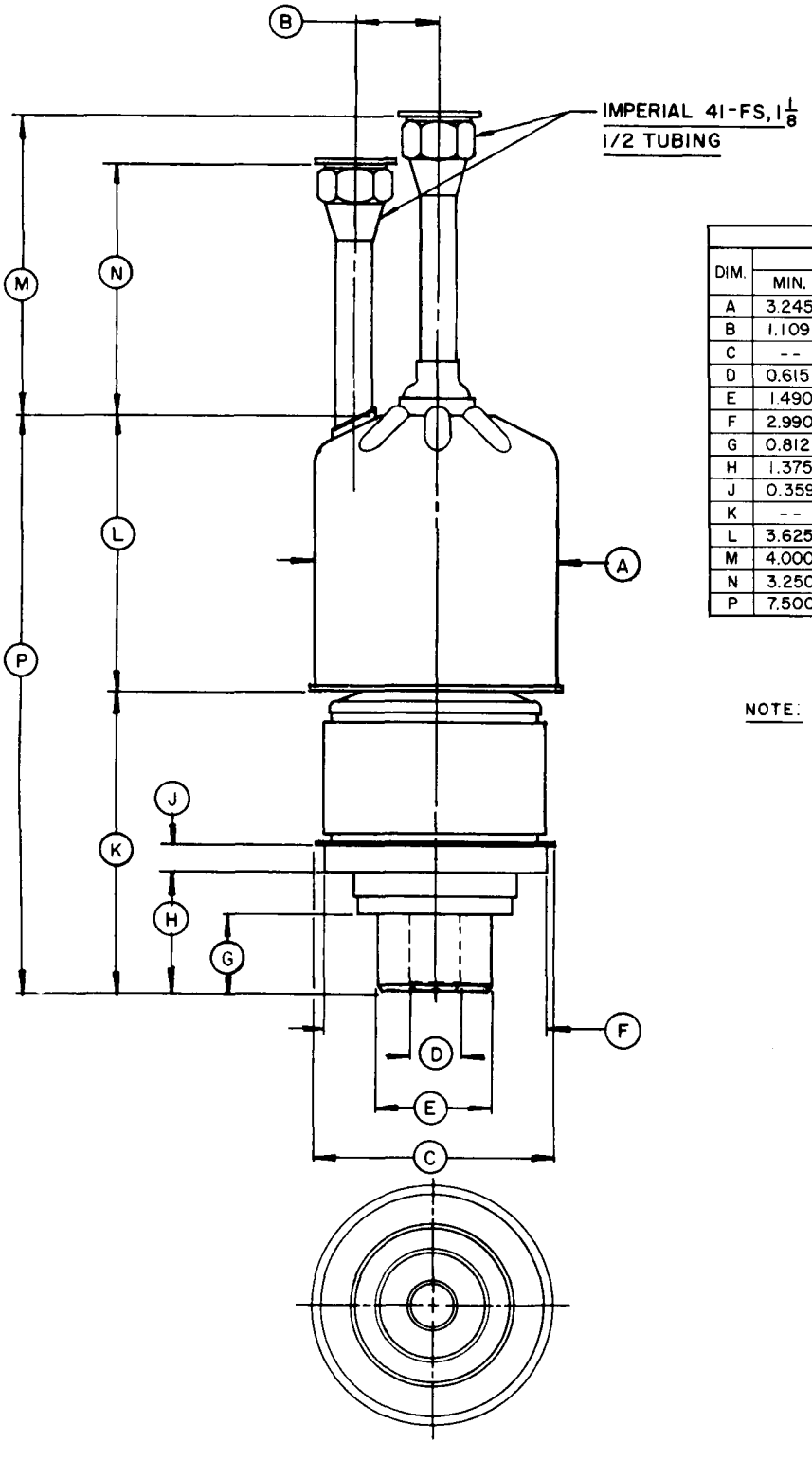

DIMENSIONAL DATA						
DIM.	INCHES			MILLIMETERS		
	MIN.	MAX.	REF.	MIN.	MAX.	REF.
A	3.245	3.255	--	82.42	82.68	--
B	1.109	1.141	--	28.17	28.98	--
C	--	3.625	--	--	92.08	--
D	0.615	0.635	--	15.62	16.13	--
E	1.490	1.510	--	37.85	38.35	--
F	2.990	3.010	--	75.95	76.45	--
G	0.812	0.938	--	20.62	23.83	--
H	1.375	1.625	--	34.93	41.28	--
J	0.359	0.422	--	9.12	10.72	--
K	--	--	3.599	--	--	91.41
L	3.625	3.875	--	92.08	98.43	--
M	4.000	4.500	--	101.60	114.30	--
N	3.250	3.750	--	82.55	95.25	--
P	7.500	8.125	--	190.50	206.38	--

NOTE: REF. DIMS ARE FOR INFO ONLY AND NOT REQ. FOR INSPECTION PURPOSES.

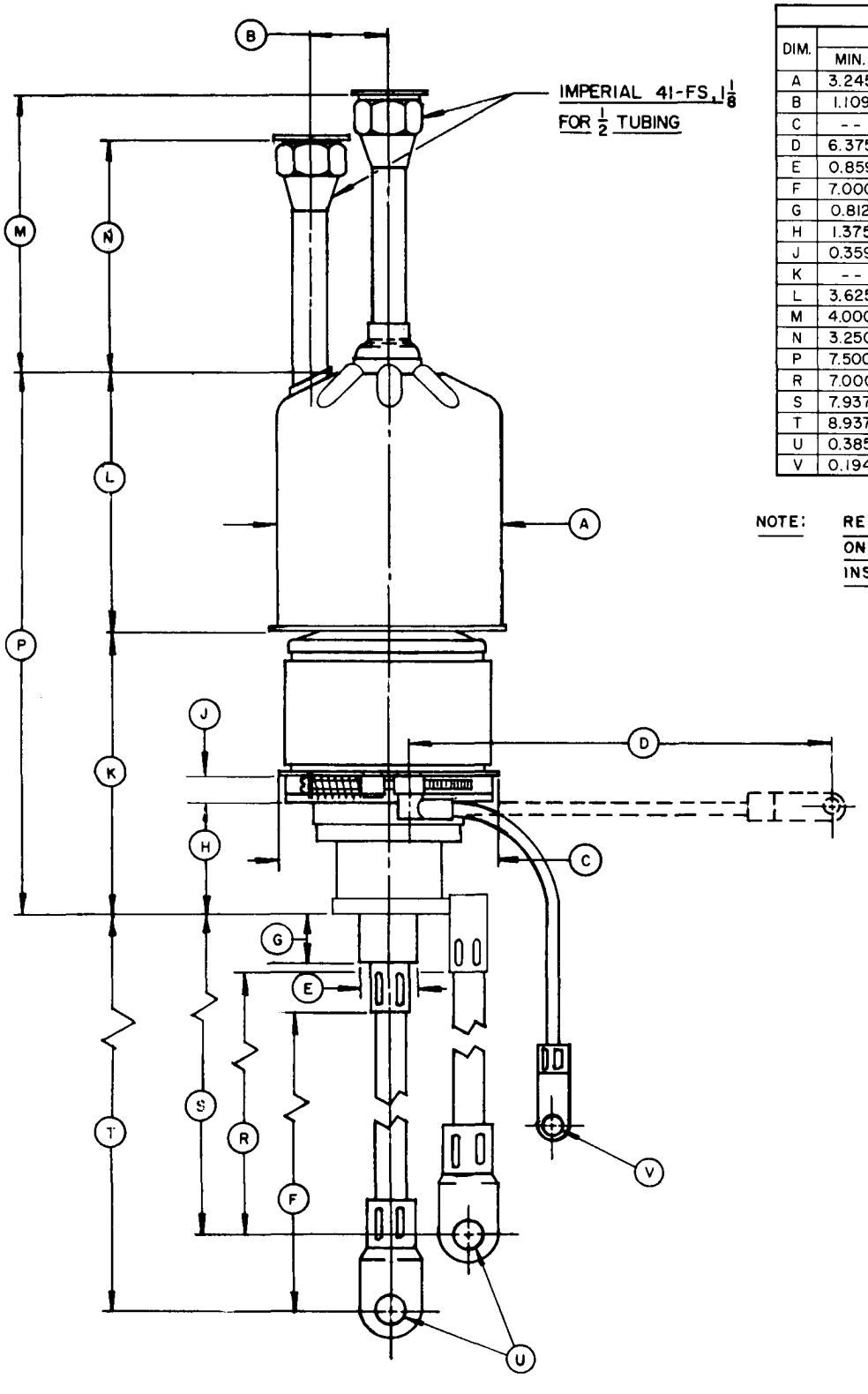

DIMENSIONAL DATA						
DIM.	INCHES			MILLIMETERS		
	MIN.	MAX.	REF.	MIN.	MAX.	REF.
A	3.245	3.255	--	82.42	82.68	--
B	1.109	1.141	--	28.17	28.98	--
C	--	3.625	--	--	92.08	--
D	6.375	6.625	--	161.93	168.28	--
E	0.859	0.890	--	21.82	22.61	--
F	7.000	7.500	--	177.80	190.50	--
G	0.812	0.938	--	20.62	23.83	--
H	1.375	1.625	--	34.93	41.28	--
J	0.359	0.422	--	9.12	10.72	--
K	--	--	3.599	--	--	91.41
L	3.625	3.875	--	92.08	98.43	--
M	4.000	4.500	--	101.60	114.30	--
N	3.250	3.750	--	82.55	95.25	--
P	7.500	8.125	--	190.50	206.38	--
R	7.000	7.500	--	177.80	190.50	--
S	7.937	8.437	--	201.60	214.30	--
T	8.937	9.437	--	226.99	239.70	--
U	0.385	0.395	--	9.78	10.03	--
V	0.194	0.200	--	4.93	5.08	--

NOTE: REF. DIMS ARE FOR INFO ONLY AND NOT REQ. FOR INSPECTION PURPOSES.