TECHNICAL DATA

8240 3CW5000A1 8241 3CW5000F1

LOW-MU WATER-COOLED TRIODES

The EIMAC 8240/3CW5000A1 and 8241/3CW5000F1 are low-mu water-cooled power triodes intended for use as audio amplifiers or modulators. Their maximum rated plate dissipation is 5000 watts. The two types are identical except for the addition of flexible leads for the grid and filament terminals on the 8241/3CW5000F1.

Two of these tubes, in Class AB_1 audio service, will deliver more than 10 kilowatts maximum-signal plate output power at 6000 plate volts without drawing grid current.

These two types are electrically identical to the air-cooled EIMAC 8238/3CX3000A1 except for the plate dissipation rating.

GENERAL CHARACTERISTICS[1]

ELECTRICAL

Filament: Thoriated Tungsten
- Voltage ..... 7.5 ± 0.37 V
- Current, at 7.5 volts
  - 8240/3CW5000A1 ..... 51.5 A
  - 8241/3CW5000F1 ..... 50.5 A

Transconductance (Average)
- I_b = 1.0 Adc, E_b = 3000 Vdc . 11,000 μmhos

Amplification Factor (Average) 4.9

1. Characterisitcs and operating values are based on performance tests. These figures may change without notice as the result of additional data or product refinement. EIMAC Div. of Varian should be consulted before using this information for final equipment design.

MECHANICAL

Maximum Overall Dimensions:
- Length (excluding leads on 8241/3CW5000F1) ..... 12.625 in; 321 mm
- Diameter ..... 3.255 in;86.2 mm

Net Weight (Approximate) ..... 3.5 lbs; 1.6 kg

Operating Position ..... Axis vertical, base down or up

Maximum Operating Temperature:
- Ceramic/Metal Seals or Envelope ..... 250°C

Cooling:
- Seals and Envelope ..... Forced Air
- Plate ..... Water

Base ..... See Outline Drawings

(Effective 5-15-71) © by Varian Printed in U.S.A.

AUDIO FREQUENCY POWER AMPLIFIER OR MODULATOR

Class AB_1, Grid Driven (Sinusoidal Wave)

ABSOLUTE MAXIMUM RATINGS (per tube)

DC PLATE VOLTAGE	6000	VOLTS
DC PLATE CURRENT	2.5	AMPERES
PLATE DISSIPATION	5000	WATTS
GRID DISSIPATION	50	WATTS

1. Approximate value; adjust to give stated zero-signal plate current.
2. Per tube.

TYPICAL OPERATION (Class AB_1, Sinusoidal Wave, Two Tubes)

Plate Voltage	4000	5000	6000	Vdc
Grid Voltage[1]	-860	-1080	-1300	Vdc
Zero-Signal Plate Current	500	400	335	mAdc
Max. Signal Plate Current	3.00	2.80	2.65	Adc
Peak af Grid Voltage[2]	760	995	1250	v
Peak Driving Power	0	0	0	w
Max. Signal Plate Input Power	12,000	14,000	16,000	W
Max. Signal Plate Dissipation[2]	3000	3000	3000	W
Max. Signal Plate Output Power	6000	8000	10,000	W
Load Resistance (plate to plate)	2160	3320	4560	Ω

NOTE: TYPICAL OPERATION data are obtained by measurement or calculation from published characteristic curves. Adjustment of the grid voltage to obtain the specified plate current at the specified bias, and plate voltages is assumed. If this procedure is followed, there will be little variation in output power when the tube is changed.

RANGE VALUES FOR EQUIPMENT DESIGN	Min.	Max.	
Filament: Current at 7.5 volts (8240/3CW5000A1)	49.0	54.0	A
(8241/3CW5000F1)	48.0	53.0	A
Amplification Factor	4.3	5.6	

APPLICATION

MECHANICAL

MOUNTING - The 3CW5000A1 and 3CW5000F1 must be mounted vertically, base down or up at the convenience of the circuit designer. The filament connections to the 3CW5000A1 should be made through spring collets. These are available from EIMAC with the following part numbers: 149575 Inner line collet; 149576 Outer line collet

Reasonable care should be taken that these collets do not impart undue strain to the terminals or the base of the tube.

COOLING - With an anode dissipation of 5000 watts and with an incoming water temperature of 50°C maximum, 7.7 gpm of cooling water must be supplied to the anode cooling jacket. Outlet water temperature from the cooling jacket should never exceed 70°C, and water pressure on the jacket should not exceed 60 psi. The pressure drop across the anode cooling jacket itself, with a water flow of 7.7 gpm, will be approximately 6 psi.

The grid-terminal contact surface and adjacent ceramic must be cooled by forced air, with quantity, velocity, and direction adjusted to limit the maximum seal temperature to less than 250°C.

The filament stem structure also requires forced-air cooling. A minimum of 6 cfm should be directed into the space between the inner and outer filament contacting surfaces.

Both air and water flow must be supplied before or simultaneously with the application of electrode voltages, including the filament, and may be removed simultaneously with them. Where long life and consistent performance are factors, cooling in excess of minimum requirements is normally beneficial.

ELECTRICAL

FILAMENT OPERATION - The filament voltage, as measured at the filament terminals, should be 7.5 volts, with maximum allowable variations due to line fluctuations of from 7.12 to 7.87 volts.

HIGH VOLTAGE - The 3CW5000A1 and 3CW-5000F1 operate at voltages which can be deadly, and the equipment must be designed properly and operating precautions must be followed. Equipment must be designed so that no one can come in contact with high voltages. All equipment must include safety enclosures for high-voltage circuits and terminals, with interlock switches to open the primary circuits of the power supplies and to discharge high-voltage condensers when access doors are opened. Interlock switches must not be bypassed or "cheated" to allow operation with access doors open. Always remember that HIGH VOLTAGE CAN KILL.

SPECIAL APPLICATIONS - If it is desired to operate these tubes under conditions widely different from those given here write to the Power Grid Tube Division, EIMAC Division of Varian, 301 Industrial Way, San Carlos, CA. 94070, for information and recommendations.

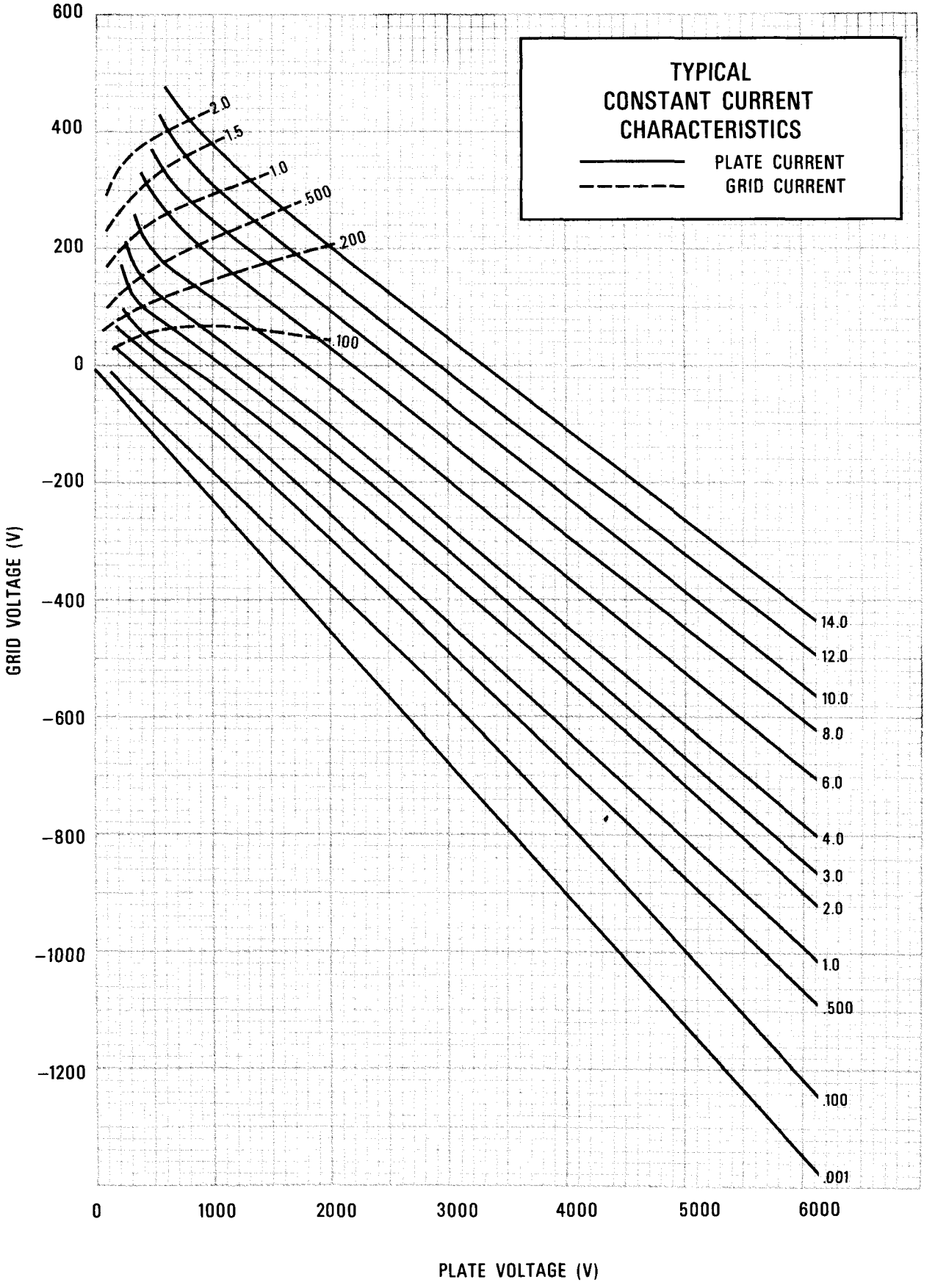
TYPICAL
CONSTANT CURRENT
CHARACTERISTICS
PLATE CURRENT
GRID CURRENT
2.0
1.5
1.0
.500
.200
.100
14.0
12.0
10.0
8.0
6.0
4.0
3.0
2.0
1.0
.500
.100
.001
600
400
200
0
-200
-400
-600
-800
-1000
-1200
GRID VOLTAGE (V)
0
1000
2000
3000
4000
5000
6000
PLATE VOLTAGE (V)

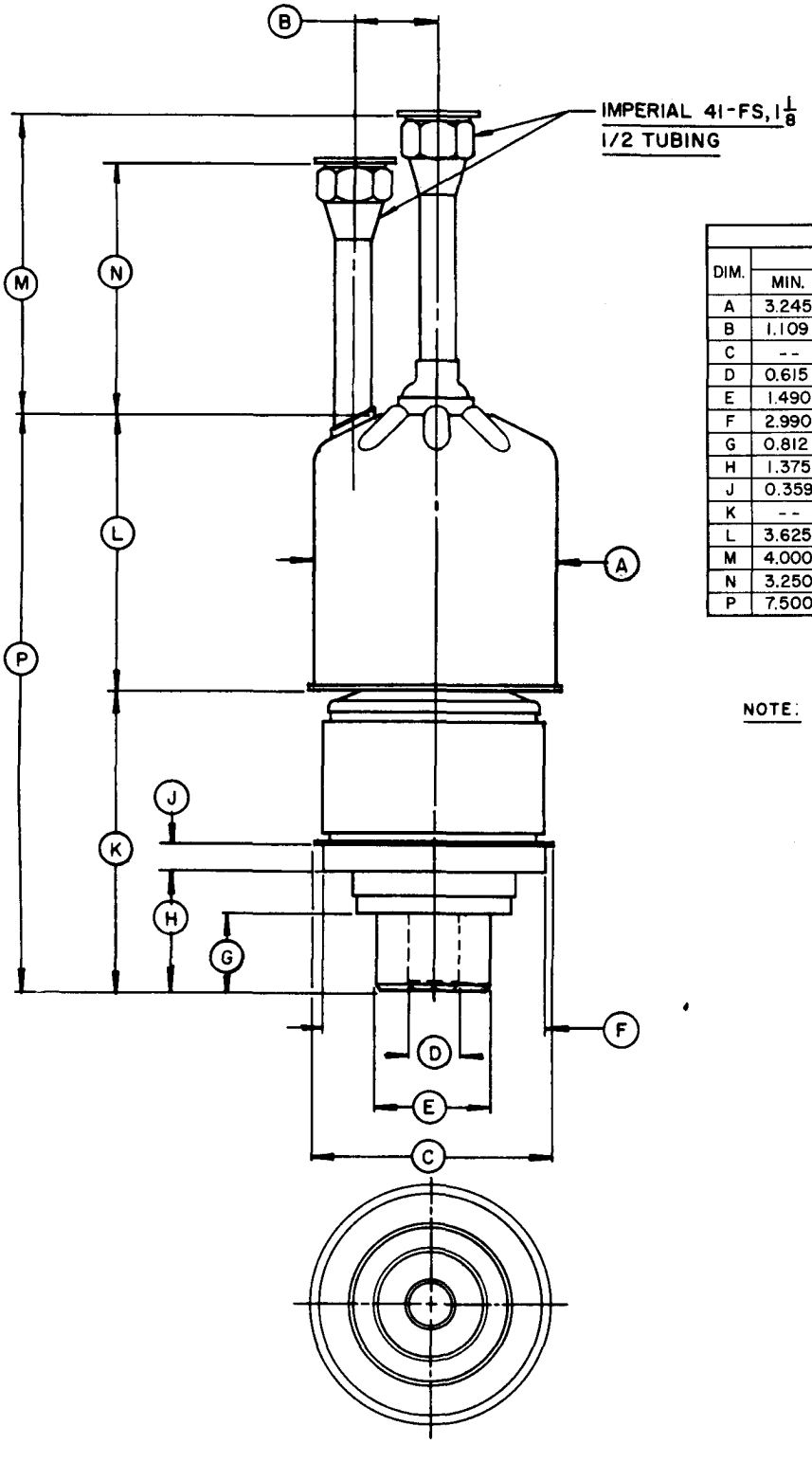

DIMENSIONAL DATA						
DIM.	INCHES			MILLIMETERS		
	MIN.	MAX.	REF.	MIN.	MAX.	REF.
A	3.245	3.255	--	82.42	82.68	--
B	1.109	1.141	--	28.17	28.98	--
C	--	3.625	--	--	92.08	--
D	0.615	0.635	--	15.62	16.13	--
E	1.490	1.510	--	37.85	38.35	--
F	2.990	3.010	--	75.95	76.45	--
G	0.812	0.938	--	20.62	23.83	--
H	1.375	1.625	--	34.93	41.28	--
J	0.359	0.422	--	9.12	10.72	--
K	--	--	3.599	--	--	91.41
L	3.625	3.875	--	92.08	98.43	--
M	4.000	4.500	--	101.60	114.30	--
N	3.250	3.750	--	82.55	95.25	--
P	7.500	8.125	--	190.50	206.38	--

NOTE: REF. DIMS ARE FOR INFO ONLY AND NOT REQ. FOR INSPECTION PURPOSES.

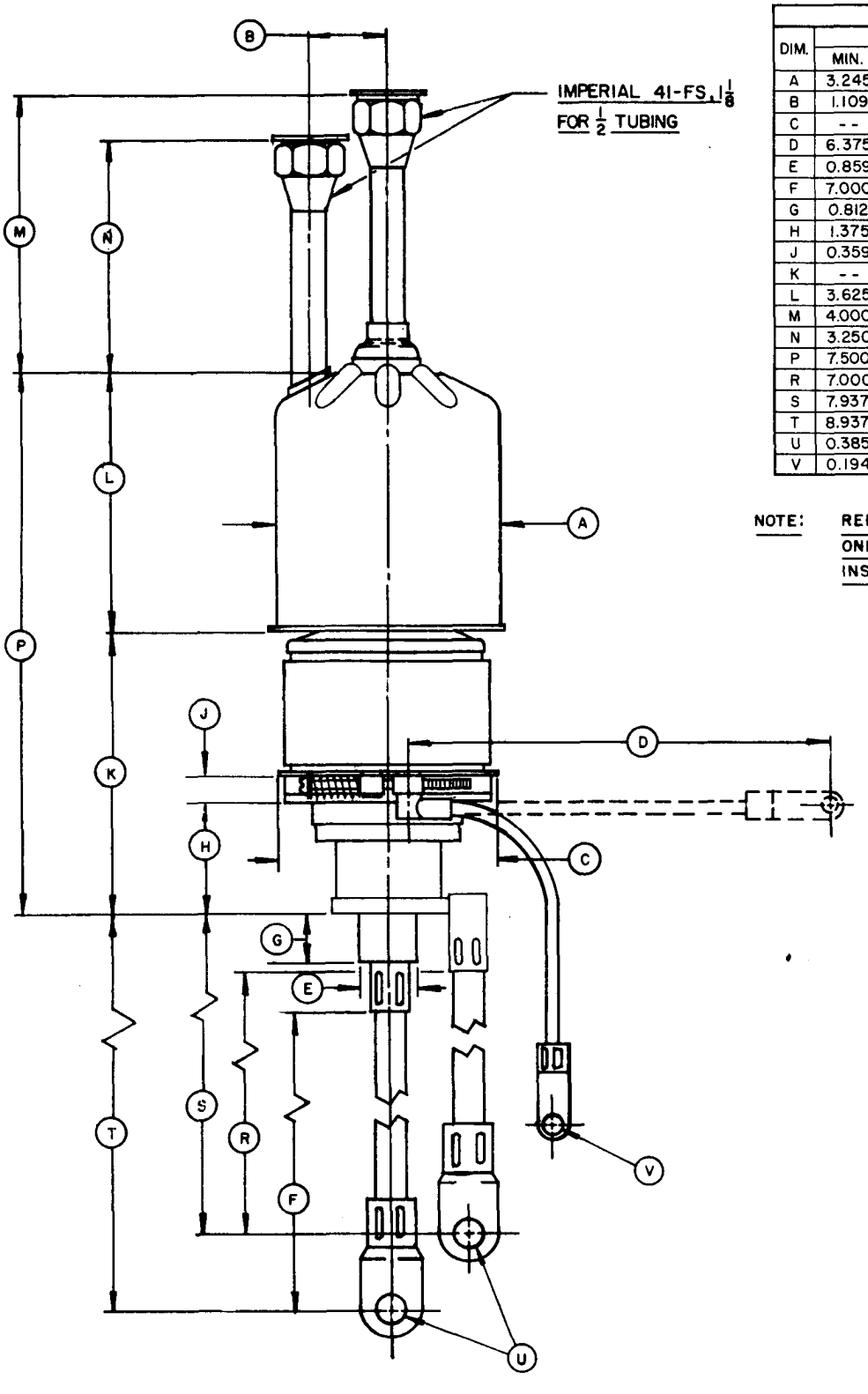

DIMENSIONAL DATA						
DIM.	INCHES			MILLIMETERS		
	MIN.	MAX.	REF.	MIN.	MAX.	REF.
A	3.245	3.255	--	82.42	82.68	--
B	1.109	1.141	--	28.17	28.98	--
C	--	3.625	--	--	92.08	--
D	6.375	6.625	--	161.93	168.28	--
E	0.859	0.890	--	21.82	22.61	--
F	7.000	7.500	--	177.80	190.50	--
G	0.812	0.938	--	20.62	23.83	--
H	1.375	1.625	--	34.93	41.28	--
J	0.359	0.422	--	9.12	10.72	--
K	--	--	3.599	--	--	91.41
L	3.625	3.875	--	92.08	98.43	--
M	4.000	4.500	--	101.60	114.30	--
N	3.250	3.750	--	82.55	95.25	--
P	7.500	8.125	--	190.50	206.38	--
R	7.000	7.500	--	177.80	190.50	--
S	7.937	8.437	--	201.60	214.30	--
T	8.937	9.437	--	226.99	239.70	--
U	0.385	0.395	--	9.78	10.03	--
V	0.194	0.200	--	4.93	5.08	--

NOTE: REF. DIMS ARE FOR INFO ONLY AND NOT REQ. FOR INSPECTION PURPOSES.