TECHNICAL DATA

8238
3CX3000A1
LOW-MU TRIODE

The Eimac 8238/3CX3000A1 is a low-mu forced-air cooled power triode intended for use as an audio amplifier or modulator. The maximum rated plate dissipation is 3000 watts.

Available high plate current under Class AB_1 operating conditions permits high power gain with a minimum of distortion.

The ceramic envelope is rugged and permits high temperature processing leading to reliable service.

GENERAL CHARACTERISTICS

ELECTRICAL

	Min.	Nom.	Max.	
Filament: Thoriated Tungsten				
Voltage		7.5		V
Current	49		54	A
Amplification Factor	4.3		5.6	
Direct Interelectrode Capacitances (Average)				
Grid-Plate		17		pF
Grid-Filament		29		pF
Plate-Filament		2.5		pF
Transconductance ($_b$ = 1.0 A, E_b = 3000V)		11,000		umhos

MECHANICAL

Base	See outline drawing
Mounting Position	Vertical, base down or up
Cooling	Forced Air
Maximum Temperatures:	
Grid and Filament Seals	250°C
Anode Cooler Core	250°C
Maximum Diameter	4.16 in.
Maximum Height	8.59 in.
Net Weight	6.25 lbs.
Shipping Weight	16 lbs.

AUDIO FREQUENCY POWER AMPLIFIER OR MODULATOR

Class-AB_1

MAXIMUM RATINGS (Per tube)

DC PLATE VOLTAGE	6000	VOLTS
DC PLATE CURRENT	2.5	AMPERES
PLATE DISSIPATION	3000	WATTS
GRID DISSIPATION	50	WATTS

*Adjust to stated Zero-Signal DC Plate Current. Can be expected to vary ±15%. Effective grid-current resistance must not exceed 200,000 ohms.

TYPICAL OPERATION (Sinusoidal wave, two tubes)

Class AB_1

DC Plate Voltage	4.0	5.5	kV
DC Grid Voltage (Approx)*	-750	-1070	Volts
Zero-Signal DC Plate Current	500	500	mA
Max-Signal DC Plate Current	2.75	2.2	Amps
Effective Load, Plate-to-Plate	2120	4000	Ohms
Peak AF Grid Input Voltage (per tube)	750	1070	Volts
Max-Signal Driving Power	0	0	Watts
Max-Signal Plate Input Power	11.0	13.1	kW
Max-Signal Plate Dissipation (per tube)	2.75	2.55	kW
Max-Signal Plate Output Power	5.5	8.25	kW

(Effective 11-1-67) © 1967 by Varian

Printed in U.S.A.

APPLICATION

MECHANICAL

Mounting: The 3CX3000A1 must be mounted vertically with its base up or down at the convenience of the designer. The filament connections should be made through spring collets and care must be taken not to impart strain to the terminals or base assembly.

The tube must be protected from severe shock and vibration during shipment and operation.

Cooling: Sufficient forced air cooling must be provided to maintain seal and anode core temperature at 250°C or below. Air-flow must be started when filament power is applied and it is advisable to continue air-cooling for two minutes after all voltages are removed.

The table below lists minimum air-flow requirements to maintain tube temperatures below 250°C with air flowing in both the base-to-anode and anode-to-base directions. This tabulation presumes air at 50°C and sea level. A separate supply of approximately 3 cubic feet per minute, directed into the filament structure is also required to maintain rated filament seal temperatures. This is best accomplished using a small diameter insulating tubing directed into the stem, between the filament seals.

	MINIMUM COOLING AIR-FLOW REQUIREMENTS			
	BASE-TO-ANODE FLOW		ANODE-TO-BASE FLOW	
Plate Dissipation (Watts)	AIR-FLOW (CFM)	PRESSURE DROP (inches of water)	AIR-FLOW (CFM)	PRESSURE DROP (inches of water)
1000	32	0.49	39	0.65
2000	67.5	1.52	85	2.16
3000	106	3.15	138	4.55

NOTE:
An extra 450 watts have been added to these plate dissipation figures in preparing this tabulation, to compensate for grid and filament dissipation.

For operation at high altitudes or higher ambient temperatures, these quantities should be increased. In all cases it is suggested that actual temperatures be measured to insure adequate cooling.

ELECTRICAL

Filament: The rated filament voltage for the 3CX3000A1 is 7.5 volts and should not be exceeded by more than five percent if maximum tube life is to be realized. Reduction of filament voltage to about 7.2 volts will actually enhance tube life and provision should be made for this adjustment where the lower emission can be tolerated.

Grid Operation: The grid dissipation rating of the 3CX3000A1 is 50 watts. This is the product of the peak positive grid voltage and average dc grid current. When tubes are used in parallel in amplifier or modulator service, provision should be made for individual adjustment of bias voltage, in order to match the tubes.

Special Applications: If it is desired to operate the tube under conditions widely different from those given here, write to Eimac Division of Varian Assoc., 301 Industrial Way, San Carlos, California, for information and recommendations.

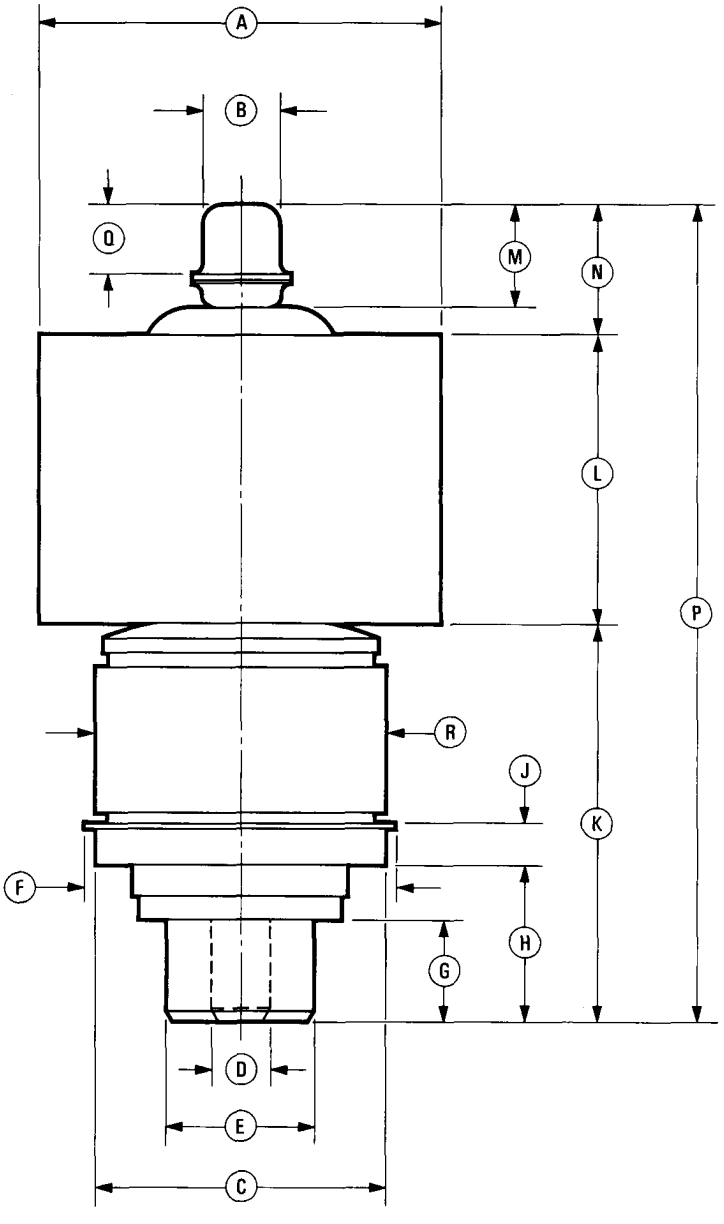

DIMENSIONS IN INCHES

DIMENSIONAL DATA			
REF.	MIN.	MAX.	NOM.
A	4 3/32	4 5/32	
B	25/32	27/32	
C	2.990	3.010	
D	.615	.635	
E	1.490	1.510	
F		3 5/8	
G	13/16	15/16	
H	1 3/8	1 5/8	
J	25/64	27/64	
K	3 7/8	4 1/4	
L	2 15/16	3 1/16	
M	1	1 1/8	
N	1 3/16	1 11/16	
P	8	9	
Q	11/16	13/16	
R	2.998	3.002	

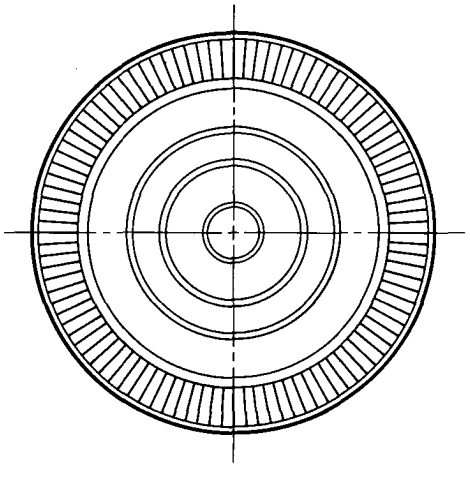

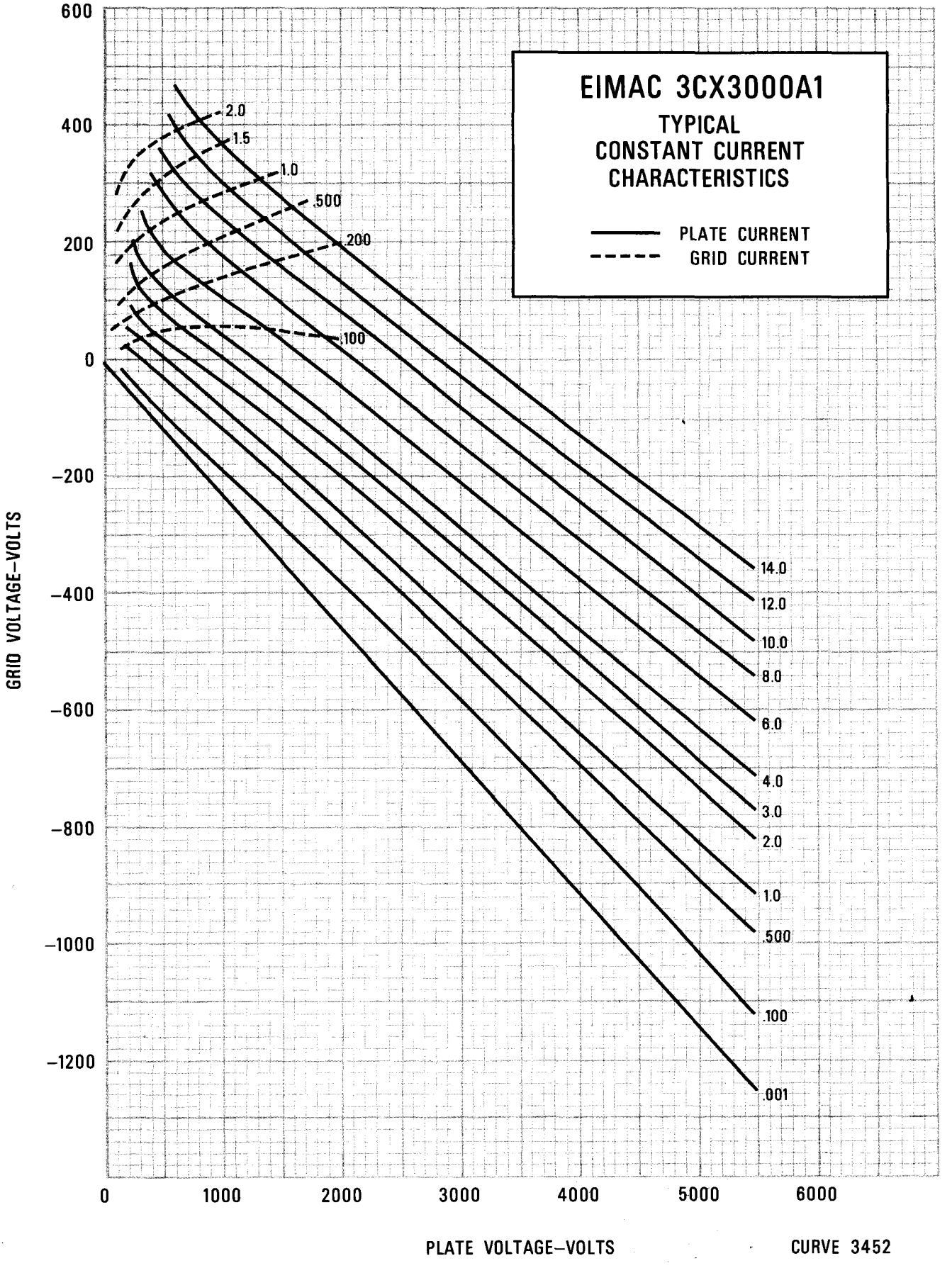
EIMAC 3CX3000A1
TYPICAL
CONSTANT CURRENT
CHARACTERISTICS
PLATE CURRENT
GRID CURRENT
2.0
1.5
1.0
.500
.200
.100
14.0
12.0
10.0
8.0
6.0
4.0
3.0
2.0
1.0
.500
.100
.001
600
400
200
0
-200
-400
-600
-800
-1000
-1200
GRID VOLTAGE-VOLTS
0
1000
2000
3000
4000
5000
6000
PLATE VOLTAGE-VOLTS

CURVE 3452