EITEL-McCULLOUGH, INC.
SAN CARLOS, CALIFORNIA

8238
3X3000A1

LOW-MU TRIODE

The Eimac 8238/3X3000A1 is a low-mu forced-air cooled power triode intended for use as an audio amplifier or modulator. The maximum rated plate dissipation is 3000 watts.

Two 3X3000A1's in class-AB_1 audio service will deliver up to 10 kilowatts maximum-signal plate output power at 6000 plate volts without drawing grid current.

The 3X3000A1 is provided with a low inductance, coaxial filament structure. A water-cooled version, the 3W5000A1, rated at 5 kW plate dissipation, is also available.

GENERAL CHARACTERISTICS

ELECTRICAL

	Min.	Nom.	Max.	
Filament: Thoriated Tungsten				
Voltage		7.5		volts
Current	49		54	amperes
Amplification Factor	4.4		5.6	
Direct Interelectrode Capacitances (Average)				
Grid-Plate		17		uufd
Grid-Filament		29		uufd
Plate-Filament		2.5		uufd
Transconductance (I_b = 1.0 amp., E_b = 3000 V)		11,000		umhos
Maximum Frequency			75	Mc

MECHANICAL

Base	See outline drawing
Mounting Position	Vertical, base down or up
Cooling	Forced air
▶ Maximum Temperatures:	
Grid and Filament Seals	175°C
Anode Cooler Core	250°C
Maximum Diameter	4.16 inches
Maximum Height	8.59 inches
Net Weight	6.25 pounds
Shipping Weight	16 pounds

AUDIO FREQUENCY POWER AMPLIFIER OR MODULATOR

Class-AB_1

MAXIMUM RATINGS (Per tube)

DC PLATE VOLTAGE	6000 MAX.	VOLTS
DC PLATE CURRENT	2.5 MAX.	AMPERES
PLATE DISSIPATION	3000 MAX.	WATTS
GRID DISSIPATION	50 MAX.	WATTS

*Adjust to stated Zero-Signal DC Plate Current. Can be expected to vary ±15%. Effective grid-circuit resistance must not exceed 200,000 ohms.

**At maximum signal without negative feedback.

TYPICAL OPERATION (Sinusoidal wave, two tubes)
Class AB_1

DC Plate Voltage	4000	5000	6000	volts
DC Grid Voltage (Approx)*	-860	-1080	-1300	volts
Zero-Signal DC Plate Current	500	400	335	mA
Max-Signal DC Plate Current	3.00	2.80	2.65	amps
Effective Load, Plate-to-Plate	2160	3320	4560	ohms
Peak AF Grid Input Voltage (per tube)	760	995	1250	volts
Max-Signal Driving Power	0	0	0	watts
Max-Signal Plate Input Power	12,000	14,000	16,000	watts
Max-Signal Plate Dissipation (per tube)	3000	3000	3000	watts
Max-Signal Plate Output Power	6000	8000	10,000	watts
Total Harmonic Distortion**	1.8	2.6	2.1	percent

(Effective 2-18-63) © Copyright 1952, 1953, 1963 by Eitel-McCullough, Inc. Printed in U.S.A.

▶ Change from data sheet dated 2-1-52

APPLICATION

MECHANICAL

Mounting: The 3X3000A1 must be mounted vertically with its base up or down at the convenience of the designer. The filament connections should be made through spring collets and care must be taken not to impart strain to the terminals or base assembly.

The tube must be protected from severe shock and vibration during shipment and operation.

Cooling: Sufficient forced air cooling must be provided to maintain seal and anode core temperature at 175°C or below. Air-flow must be started when filament power is applied and it is advisable to continue air-cooling for two minutes after all voltages are removed.

The table below lists minimum air-flow requirements to maintain tube temperatures below 175°C with air flowing in both the base-to-anode and anode-to-base directions. This tabulation presumes air at 25° C and sea level. A separate supply of approximately six cubic feet per minute, directed into the filament structure is also required to maintain rated filament seal temperatures. This is best accomplished using a small diameter insulating tubing directed into the stem between the filament seals.

	MINIMUM COOLING AIR-FLOW REQUIREMENTS			
	BASE-TO-ANODE FLOW		ANODE-TO-BASE FLOW	
Plate Dissipation (Watts)	AIR-FLOW (CFM)	PRESSURE DROP (inches of water)	AIR-FLOW (CFM)	PRESSURE DROP (inches of water)
1000	14	0.1	20	0.1
2000	37	0.3	61	0.8
3000	74	1.0	122	3.0

Note:
An extra 425 watts have been added to these plate dissipation figures in preparing this tabulation, to compensate for grid and filament dissipation.

For operation at high altitudes or higher ambient temperatures, these quantities should be increased. In all cases it is suggested that actual temperatures be measured to insure adequate cooling.

ELECTRICAL

Filament: The rated filament voltage for the 3X3000A1 is 7.5 volts and should not exceed this value by more than five percent if maximum tube life is to be realized. Reduction of filament voltage to about 7.2 volts will actually enhance tube life and provision should be made for this adjustment where the lower emission can be tolerated.

Grid Operation: The grid dissipation rating of the 3X3000A1 is 50 watts. This is the product of the peak positive grid voltage and average dc grid current. When tubes are used in parallel in amplifier or modulator service, provision should be made for individual adjustment of bias voltage, in order to match the tubes. In practice, individual adjustment of drive voltage will not be necessary.

Special Applications: If it is desired to operate the tube under conditions widely different from those given here, write to Power Grid Tube Marketing, Eitel-McCullough, Inc., 301 Industrial Way, San Carlos, California, for information and recommendations.

DIMENSIONS IN INCHES

DIMENSIONAL DATA			
REF.	MIN.	MAX.	NOM.
A	4.093	4.156	
B	.781	.843	
C		3.625	
D	.615	.635	
E	1.490	1.510	
F	2.990	3.010	
G	.812	.937	
H	1.437	1.562	
J	.375	.437	
K	4.	4.125	
L	2.968	3.031	
M	1.	1.125	
N	1.187	1.437	
P	8.156	8.593	
Q	.687	.812	

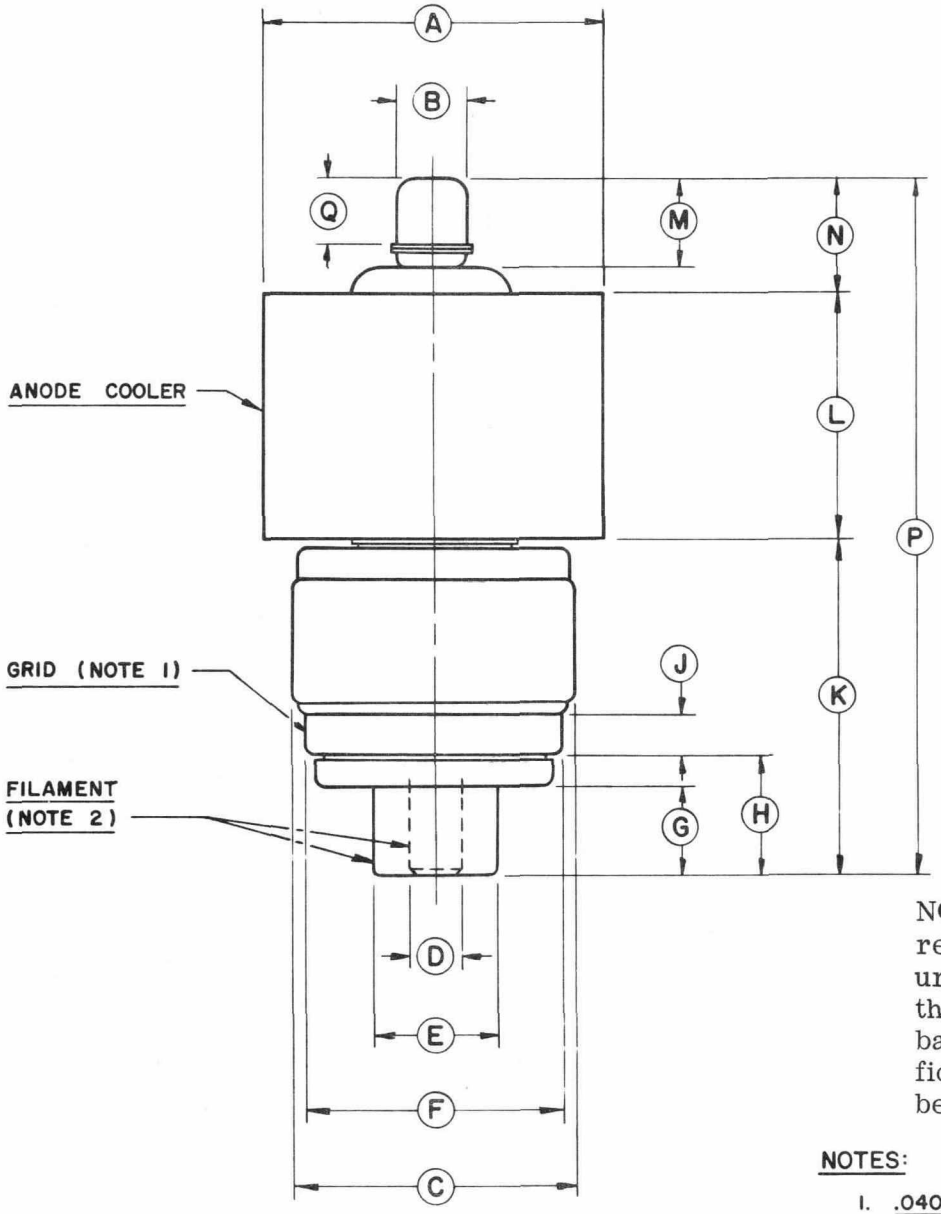

NOTE: These dimensions reflect standard manufacturing tolerances. Where they are to be made the basis of purchase specifications, they should first be checked with the factory.

NOTES:

1. .040 MAX. RUNOUT OF GRID CONTACT SURFACE WITH RESPECT TO AXIS DETERMINED BY ANODE AND OUTER FILAMENT CONTACT SURFACE.
2. .025 MAX. RUNOUT OF INNER FILAMENT CONTACT SURFACE WITH RESPECT TO OUTER FILAMENT CONTACT SURFACE.

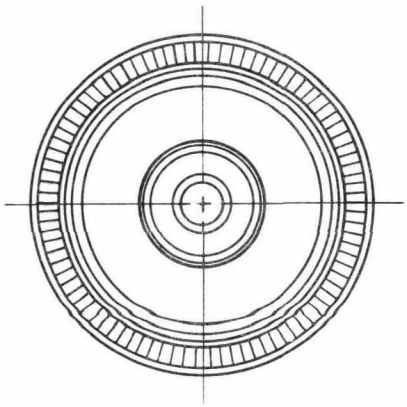

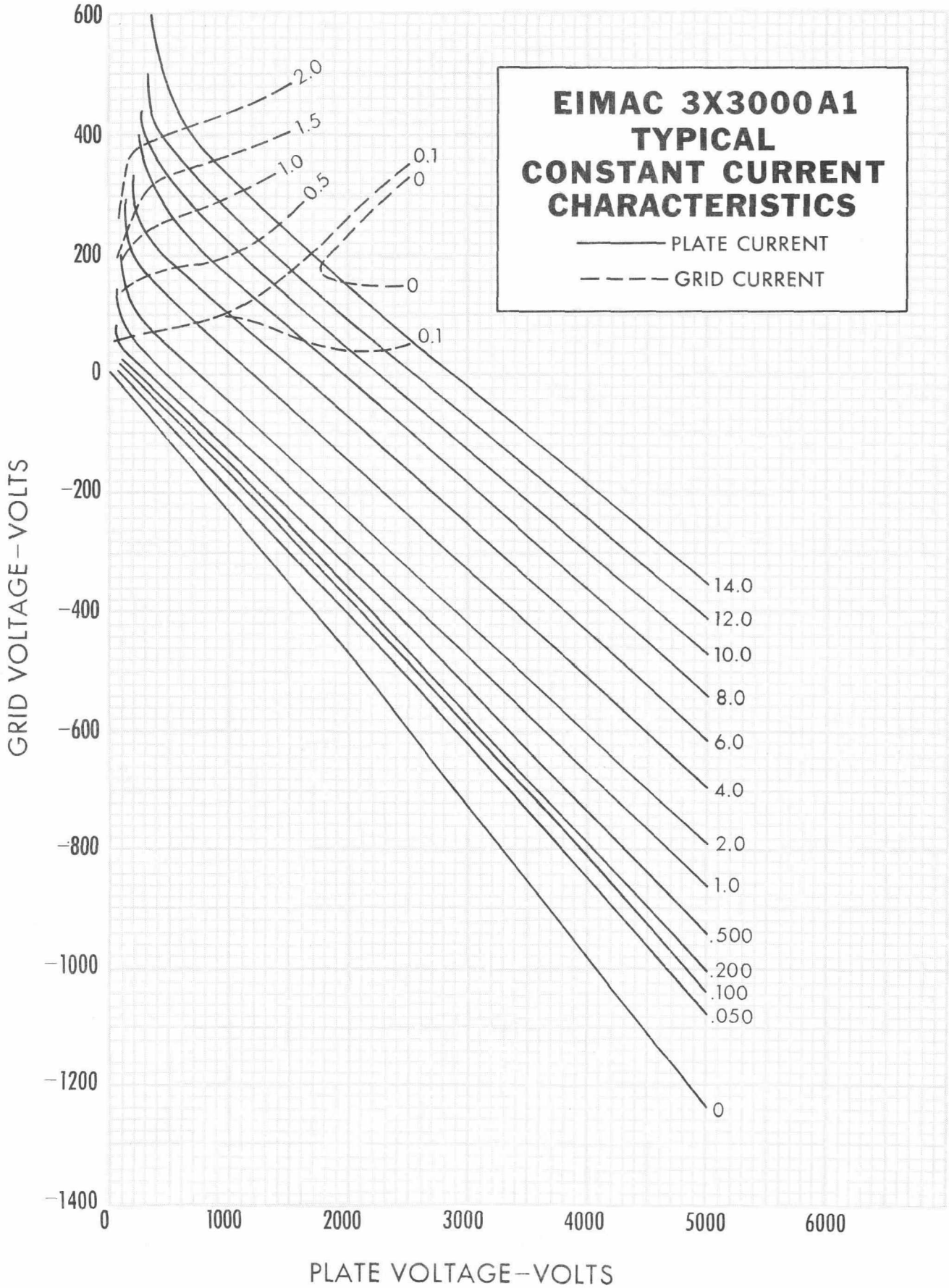
EIMAC 3X3000A1
TYPICAL
CONSTANT CURRENT
CHARACTERISTICS
PLATE CURRENT
GRID CURRENT
2.0
1.5
1.0
0.5
0.1
0
0
0.1
14.0
12.0
10.0
8.0
6.0
4.0
2.0
1.0
.500
.200
.100
.050
0
600
400
200
0
-200
-400
-600
-800
-1000
-1200
-1400
GRID VOLTAGE-VOLTS
0
1000
2000
3000
4000
5000
6000
PLATE VOLTAGE-VOLTS