EIMAC
Division of Varian
SAN CARLOS
CALIFORNIA

8169
4CX3000A
RADIAL-BEAM POWER TETRODE

The EIMAC 8169/4CX3000A is a ceramic and metal power tetrode designed to be used as a Class-AB_1 linear amplifier in audio or radio-frequency applications. Its characteristics of low intermodulation distortion make it especially suitable for single sideband service.

This tube is unique in that a production test is included to insure minimum distortion products. The 8169/4CX3000A must produce a *minimum* of 5300 watts in Class AB_1 service with IM distortion at least 32 db down, 3rd order.

The tube is also recommended for use as a Class-C radio-frequency power amplifier and plate-modulated radio-frequency power amplifier.

GENERAL CHARACTERISTICS

ELECTRICAL

Filament: Thoriated Tungsten	Min.	Nom.	Max.	
Voltage		9.0		volts
Current	39.5		43.5	amps

Amplification Factor (Grid Screen) 5.5

Frequency For Maximum Ratings 150 MHz

Direct Interelectrode Capacitances, Grounded Cathode:

Input	120	140	pF
Output	10.5	14.5	pF
Feedback		1.4	pF

Direct Interelectrode Capacitances, Grounded Grid and Screen:	Min.	Max.	
Input	55	67	pF
Output	10.5	14.5	pF
Feedback		0.2	pF

MECHANICAL

Base	Special ring and breechblock terminal surfaces
Maximum Seal Temperature	250°C
Maximum Anode Core Temperature	250°C
Recommended Socket	EIMAC SK-1400 series
Recommended Air Chimney	EIMAC SK-1406
Operating Position	Axis vertical, base up or down
Maximum Dimensions:	
Height	7.9 inches
Diameter	4.6 inches
Cooling	Forced air
Net Weight	5.5 pounds
Shipping Weight (Approximate)	10 pounds

(Revised 5-1-67) © 1965, 1967, 1969 by Varian

Printed in U.S.A.

RADIO-FREQUENCY POWER AMPLIFIER OR OSCILLATOR

Class-C Telegraphy or FM Telephony
(Key-down conditions)

MAXIMUM RATINGS

DC PLATE VOLTAGE	7000 VOLTS
DC SCREEN VOLTAGE	1000 VOLTS
DC PLATE CURRENT	2.0 AMPS
PLATE DISSIPATION	3000 WATTS
SCREEN DISSIPATION	175 WATTS
GRID DISSIPATION	50 WATTS

TYPICAL OPERATION

DC Plate Voltage	5000	7000 volts
DC Screen Voltage	500	500 volts
DC Grid Voltage	–280	–300 volts
DC Plate Current	1.9	1.9 amps
DC Screen Current	250	230 mA
DC Grid Current	100	100 mA
Peak RF Grid Voltage	385	405 volts
Driving Power	39	41 watts
Plate Dissipation	1900	2300 watts
Plate Output Power	7600	11,000 watts

PLATE-MODULATED RADIO-FREQUENCY POWER AMPLIFIER

Class-C Telephony (Carrier Conditions unless noted)

MAXIMUM RATINGS

DC PLATE VOLTAGE	5000 VOLTS
DC SCREEN VOLTAGE	600 VOLTS
DC PLATE CURRENT	1.4 AMPS
PLATE DISSIPATION*	2000 WATTS
SCREEN DISSIPATION	175 WATTS
GRID DISSIPATION	50 WATTS

*Corresponds to 3000 watts at 100 percent sine-wave modulation.

TYPICAL OPERATION

DC Plate Voltage	5000 volts
DC Screen Voltage	500 volts
Peak AF Screen Voltage (For 100% Modulation)	415 volts
DC Grid Voltage	–375 volts
DC Plate Current	1.4 amps
DC Screen Current	170 mA
DC Grid Current	68 mA
Peak RF Grid Voltage	455 volts
Grid Driving Power	31 watts
Plate Dissipation	1250 watts
Plate Output Power	5750 watts

AUDIO-FREQUENCY AMPLIFIER OR MODULATOR

Class-AB

MAXMUM RATINGS (Per Tube)

DC PLATE VOLTAGE	6000 VOLTS
DC SCREEN VOLTAGE	1000 VOLTS
DC PLATE CURRENT	2.0 AMPS
PLATE DISSIPATION	3500 WATTS
SCREEN DISSIPATION	175 WATTS
GRID DISSIPATION	50 WATTS

*Per tube
**Approximate values

TYPICAL OPERATION (Two Tubes), Class AB_1

DC Plate Voltage	5000	6000 volts
DC Screen Voltage	850	850 volts
DC Grid Voltage*	–180	–200 volts
Max-Signal Plate Current	3.6	3.1 amps
Zero-Signal Plate Current	1.0	0.7 amp
Max-Signal Screen Current**	170	120 mA
Zero-Signal Screen Current	0	0 mA
Peak AF Driving Voltage*	155	175 volts
Driving Power	0	0 watts
Load Resistance, Plate-to-Plate	3000	4160 ohms
Max-Signal Plate Dissipation*	3300	3100 watts
Max-Signal Plate Output Power	11,400	12,400 watts

NOTE: In Class AB operation, maximum plate voltage and plate current must not be applied simultaneously, as plate dissipation will be exceeded.

RADIO-FREQUENCY LINEAR AMPLIFIER

Class-AB

MAXIMUM RATINGS

DC PLATE VOLTAGE	6000 VOLTS
DC SCREEN VOLTAGE	1000 VOLTS
DC PLATE CURRENT	2.0 AMPS
PLATE DISSIPATION	3500 WATTS
SCREEN DISSIPATION	175 WATTS
GRID DISSIPATION	50 WATTS

*Approximate values

These values are obtained in existing equipment. A design test is performed on a sampling basis, insuring that the 4CX3000A will perform as indicated with respect to IM distortion products and power output.

TYPICAL OPERATION Class AB_1, Grid Driven

DC Plate Voltage	5000 volts
DC Screen Voltage	850 volts
DC Grid Voltage*	180 volts
Zero-Signal DC Plate Current	0.5 amp
Single-Tone DC Plate Current	1.65 amps
Single-Tone DC Screen Current	25 mA
Two-Tone DC Plate Current	1.10 amps
Two-Tone DC Screen Current	20 mA
Peak RF Grid Voltage	155 volts
Driving Power	0 watts
Peak Envelope Useful Output Power	5300 watts
Resonant Load Impedance	1700 ohms
Intermodulation Distortion Products (without negative feedback)	–32 db

NOTE: "TYPICAL OPERATION" data are obtained by calculation from published characteristic curves and confirmed by direct tests. No allowance is made for circuit losses. Adjustment of the rf grid drive to obtain the specified plate current at the specified grid bias, screen voltage, and plate voltage is assumed.

APPLICATION

MECHANICAL

Mounting — The 4CX3000A must be operated with its axis vertical. The base of the tube may be down or up at the convenience of the circuit designer.

Socket — The EIMAC SK-1400A and SK-1470A sockets have been designed especially for the 4CX3000A. The use of recommended air-flow rates through these sockets provides effective forced-air cooling of the tube. Air forced into the bottom of the socket passes over the tube terminals through an Air Chimney, the SK-1406, and through the anode cooling fins.

Cooling — The maximum temperature rating for the external surfaces of the 4CX3000A is 250°C. Sufficient forced-air circulation must be provided to keep the temperature of the anode at the base of the cooling fins and the temperature of the ceramic-metal seals below 250°C. Air-flow requirements to maintain seal temperature at 200°C in 40°C ambient air are tabulated below (for operation below 30 megahertz).

Plate Dissipation* (Watts)	SEA LEVEL		10,000 FEET	
	Air Flow (CFM)	Pressure Drop (Inches of water)	Air Flow (CFM)	Pressure Drop (inches of water)
1500	36.5	0.3	53	0.4
2500	60	0.8	88	1.2
3500	86	1.6	125	2.3

***Since the power dissipated by the filament represents about 450 watts and since grid-plus-screen dissipation can, under some conditions, represent another 225 watts, allowance has been made in preparing this tabulation for an additional 675 watts dissipation.**

The blower selected in a given application must be capable of supplying the desired air flow at a back pressure equal to the pressure drop shown above plus any drop encountered in ducts and filters.

At other altitudes and ambient temperatures the flow rate must be modified to obtain equivalent cooling. The flow rate and corresponding pressure differential must be determined individually in such cases, using rated maximum temperatures as the criteria for satisfactory cooling.

ELECTRICAL

Filament Operation—The rated filament voltage for the 4CX3000A is 9.0 volts. Filament voltage, as measured at the socket, should be maintained at this value to obtain maximum tube life. In no case should it be allowed to deviate by more than plus or minus five percent from the rated value.

Intermodulation Distortion — The operating conditions including distortion data are the results of actual operation in a neutralized, grid-driven amplifier. This test is performed on sample tubes from regular production runs. A plot of IM distortion versus power output under two-tone condition for a typical tube is shown on the next page.

Control Grid Operation — The rated dissipation of the grid is 50 watts. This is approximately the product of dc grid current and peak positive grid voltage. Operation at bias and drive levels near those listed will insure safe operation.

Screen-Grid Operation — The power dissipated by the screen of the 4CX3000A must not exceed 175 watts.

Screen dissipation, in cases where there is no ac applied to the screen, is the simple product of the screen voltage and the screen current. If the screen voltage is modulated, the screen dissipation will depend upon loading, driving power, and carrier screen voltage.

Screen dissipation is likely to rise to excessive values when the plate voltage, bias voltage, or plate load are removed with filament and screen voltages applied. Suitable protective means must be provided to limit the screen dissipation to 175 watts in the event of circuit failure.

Plate Dissipation—The plate-dissipation ratings for the 4CX3000A are 2000 watts for Class-C plate-modulated service and 3000 watts for Class-C telegraphy. In Class-AB operation this rating has been increased to 3500 watts to allow more input. In any Class-AB application maximum plate current and maximum plate voltage should not be applied simultaneously as the plate-dissipation rating would be exceeded.

Special Applications—If it is desired to operate this tube under conditions widely different from those given here, write to the Power Grid Tube Division or Product Manager, EIMAC Division of Varian, 301 Industrial Way, San Carlos, California, for information and recommendations.

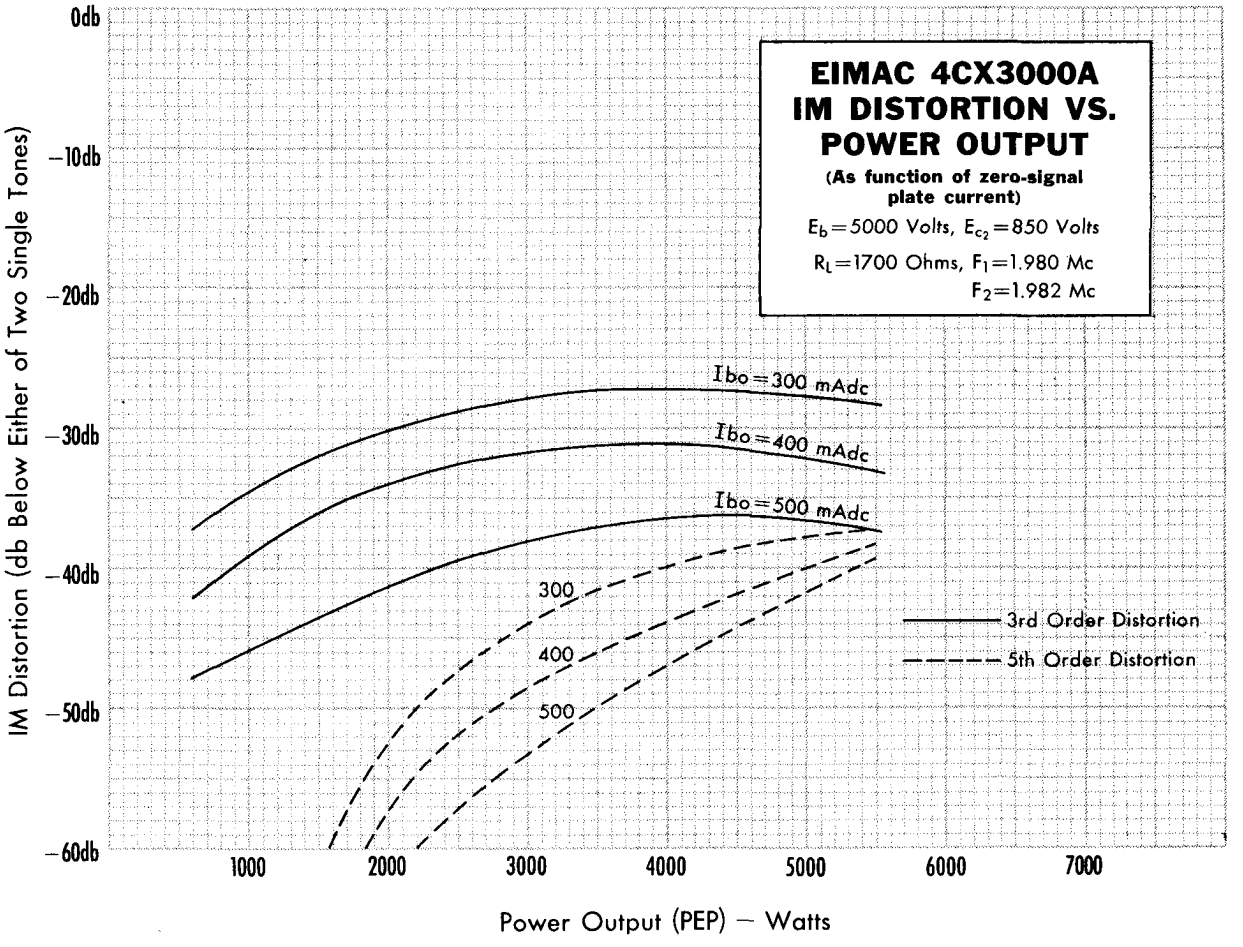

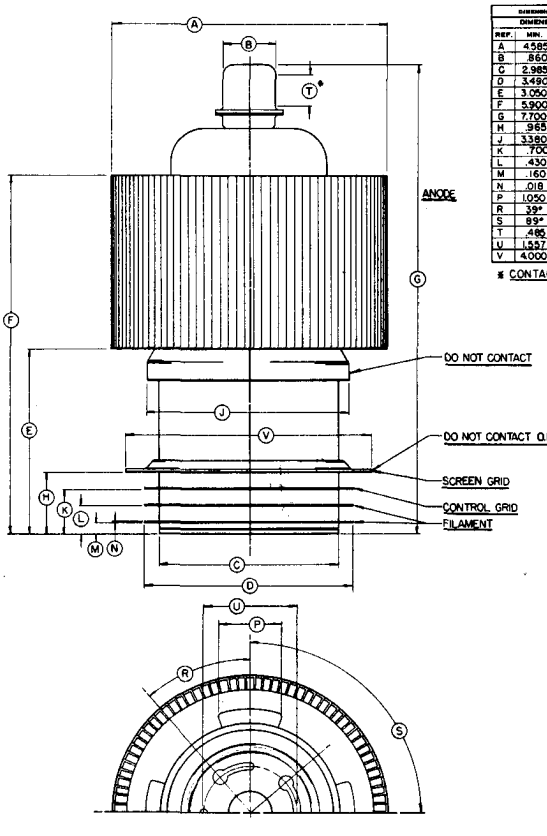

DIMENSIONS IN INCHES

DIMENSIONAL DATA

REF.	MIN.	MAX.	NOM.
A	4.585	4.625	
B	.860	.890	
C	2.985	3.025	
D	3.490	3.525	
E	3.050	3.150	
F	5.900	6.100	
G	7.700	7.900	
H	.965	1.005	
J	3.380	3.450	
K	.700	.730	
L	.430	.460	
M	.160	.180	
N	.018	.025	
P	1.050	1.100	
R	39°	41°	
S	89°	91°	
T	.485	.515	
U	1.557	1.567	
V	4.000	4.175	

* CONTACT SURFACE

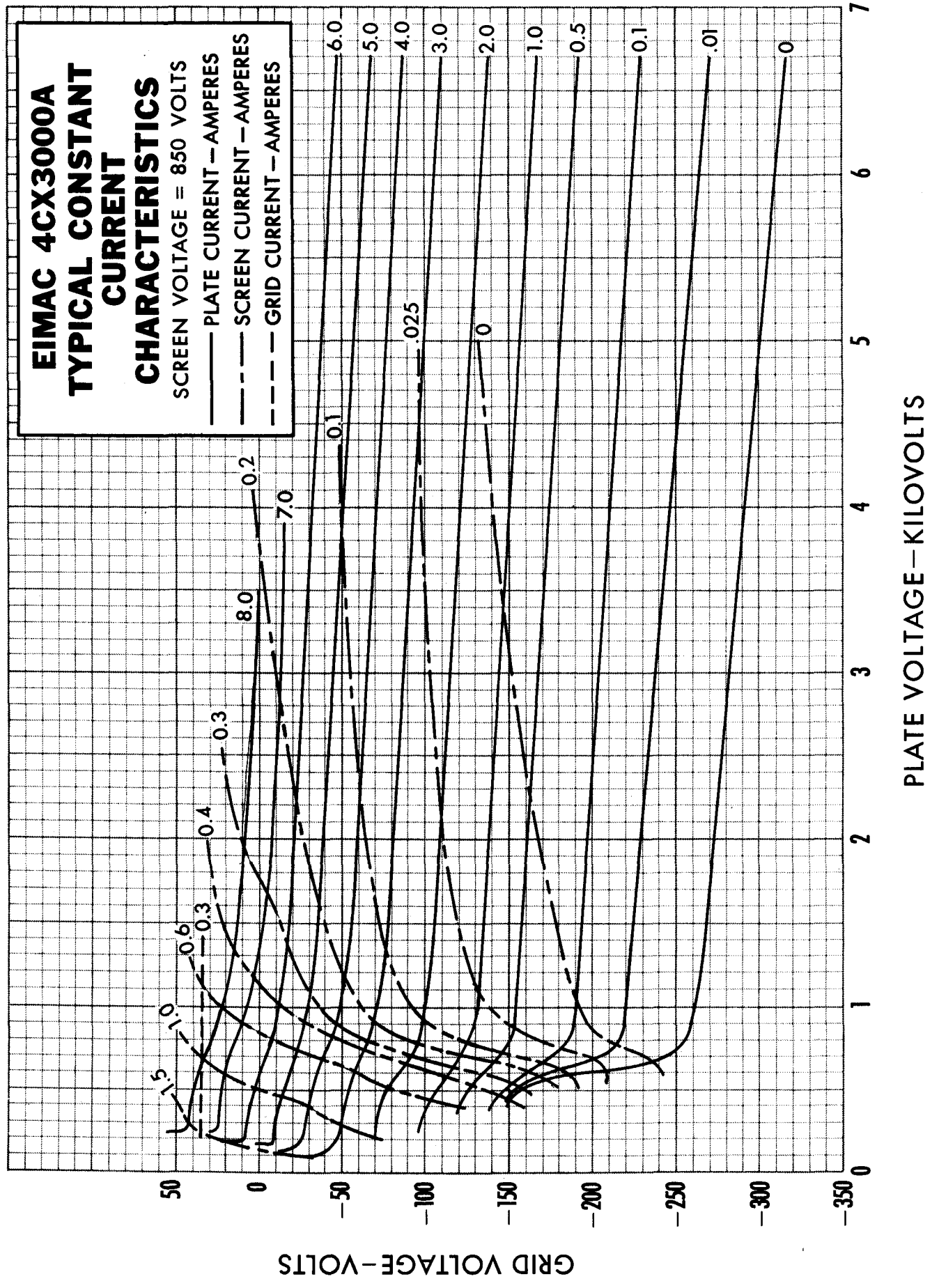
EIMAC 4CX3000A
TYPICAL CONSTANT
CURRENT
CHARACTERISTICS
SCREEN VOLTAGE = 850 VOLTS
PLATE CURRENT—AMPERES
SCREEN CURRENT—AMPERES
GRID CURRENT—AMPERES
6.0
5.0
4.0
3.0
2.0
1.0
0.5
0.1
.01
0
.025
0
0.1
0.2
7.0
8.0
0.3
0.4
0.3
0.6
1.0
1.5
PLATE VOLTAGE—KILOVOLTS
0
1
2
3
4
5
6
7
GRID VOLTAGE—VOLTS
50
0
−50
−100
−150
−200
−250
−300
−350

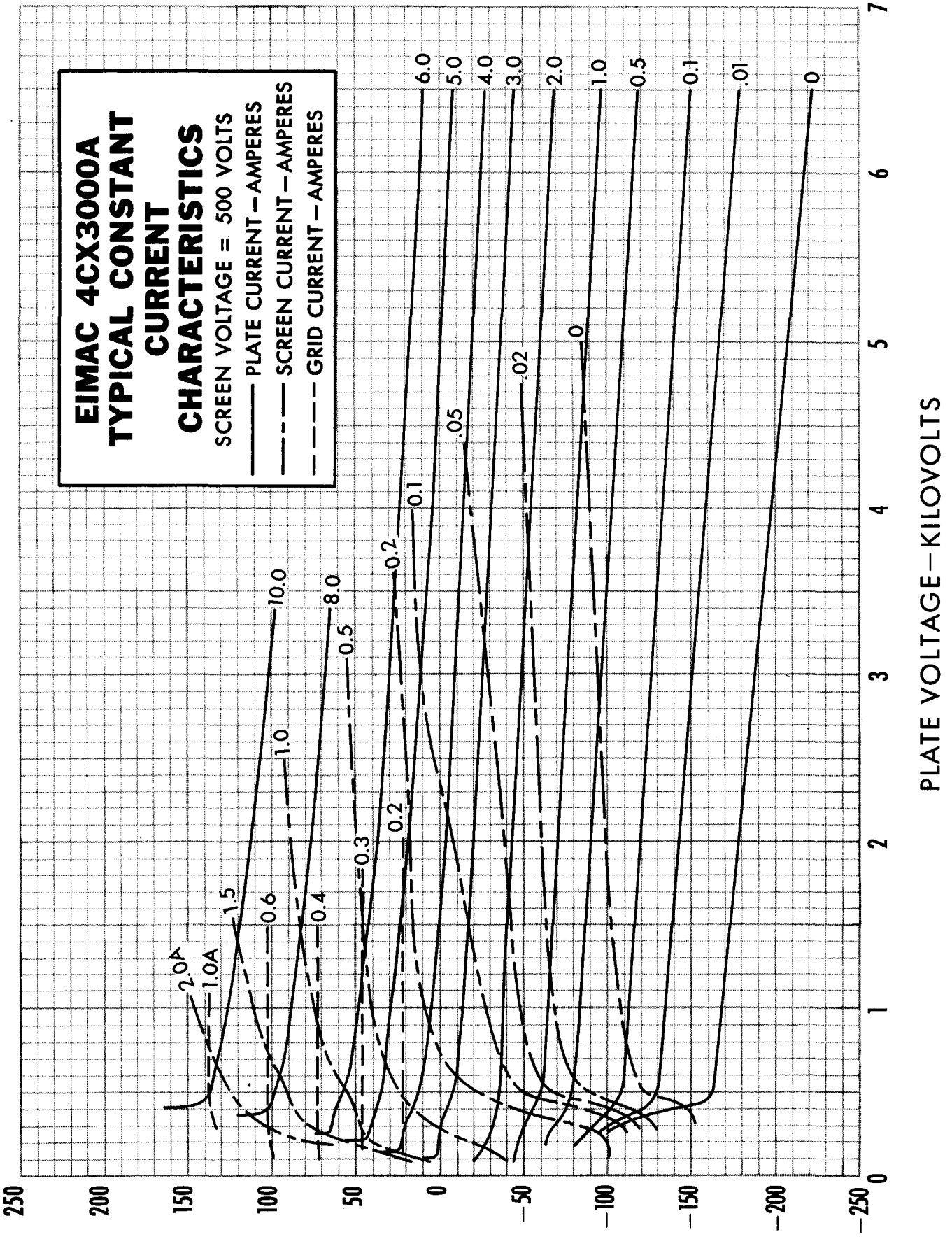
EIMAC 4CX3000A
TYPICAL CONSTANT
CURRENT
CHARACTERISTICS
SCREEN VOLTAGE = 500 VOLTS
PLATE CURRENT—AMPERES
SCREEN CURRENT—AMPERES
GRID CURRENT—AMPERES
6.0
5.0
4.0
3.0
2.0
1.0
0.5
0.1
.01
0
.05
.02
0
0.1
0.2
10.0
8.0
0.5
1.0
0.2
0.3
1.5
0.6
0.4
2.0A
1.0A
250
200
150
100
50
0
−50
−100
−150
−200
−250
0
1
2
3
4
5
6
7
GRID VOLTAGE—VOLTS
PLATE VOLTAGE—KILOVOLTS