TECHNICAL DATA

8168
4CX1000A

CERAMIC POWER TETRODE

The EIMAC 8168/4CX1000A is a ceramic/metal, forced-air cooled, radial-beam tetrode with a rated maximum plate dissipation of 1000 watts. It is a low-voltage, high-current tube specifically designed for Class-AB1 rf linear-amplifier or audio-amplifier applications where its high gain may be used to advantage. At its rated maximum plate voltage of 3000 volts, it is capable of producing 1630 watts of peak-envelope output power. Two 8168/4CX1000As operating in Class-AB1 will produce 3260 watts of audio power.

GENERAL CHARACTERISTICS[1]

ELECTRICAL

Cathode: Oxide Coated, Unipotential		
Heater: Voltage	6.0 ± 0.3	V
Current, at 6.0 volts	9.0	A
Transconductance (Average):		
I_b = 1.0 Adc	37,000	μmhos
Direct Interelectrode Capacitances (grounded cathode)[2]		
Input	81	pF
Output	11.8	pF
Feedback	0.015	pF
Direct Interelectrode Capacitances (grounded grid and screen)[2]		
Input	35.5	pF
Output	12	pF
Feedback	0.004	pF
Frequency of Maximum Rating:		
CW	110	MHz

1. Characteristics and operating values are based upon performance tests. These figures may change without notice as the result of additional data or product refinement. EIMAC Division of Varian should be consulted before using this information for final equipment design.

2. In Shielded Fixture.

MECHANICAL

Maximum Overall Dimensions:	
Length	4.80 in; 122 mm
Diameter	3.37 in; 85.5 mm
Net Weight	27 oz; 768 gm
Operating Position	Any

(Revised 5-1-70) © 1963, 1966, 1967 Varian

Printed in U.S.A.

Maximum Operating Temperature:
- Ceramic/Metal Seals ..... 250°C
- Anode Core ..... 250°C

Cooling ..... Forced Air
Base ..... Special, breechblock terminal surfaces
Recommended Socket ..... EIMAC SK-800 Series
Recommended Chimney ..... EIMAC SK-806 Series

RADIO FREQUENCY LINEAR AMPLIFIER
GRID DRIVEN

Class AB_1

MAXIMUM RATINGS:

DC PLATE VOLTAGE	3000	VOLTS
DC SCREEN VOLTAGE	400	VOLTS
DC PLATE CURRENT	1.0	AMPERE
PLATE DISSIPATION	1000	WATTS
SCREEN DISSIPATION	12	WATTS
GRID DISSIPATION	0	WATT

1. Adjust to specified zero-signal dc plate current.
2. Approximate value.

TYPICAL OPERATION (Frequencies to 30 MHz)
Class AB_1 Grid Driven, Peak Envelope or Modulation Crest Conditions

Plate Voltage	2000	2500	3000	Vdc
Screen Voltage	325	325	325	Vdc
Grid Voltage[1]	-60	-60	-60	Vdc
Zero-Signal Plate Current	250	250	250	mAdc
Single Tone Plate Current	890	885	875	mAdc
Two-Tone Plate Current	645	650	635	mAdc
Zero-Signal Screen Current	8	6	5	mAdc
Single-Tone Screen Current[2]	35	35	35	mAdc
Two-Tone Screen Current[2]	10	8	8	mAdc
Plate Output Power	930	1300	1630	W

AUDIO FREQUENCY POWER AMPLIFIER OR MODULATOR

Class AB_1, Grid Driven(Sinusoidal Wave)

MAXIMUM RATINGS (Per Tube)

DC PLATE VOLTAGE	3000	VOLTS
DC SCREEN VOLTAGE	400	VOLTS
DC PLATE CURRENT	1.0	AMPERE
PLATE DISSIPATION	1000	WATTS
SCREEN DISSIPATION	12	WATTS
GRID DISSIPATION	0	WATT

TYPICAL OPERATION (Two Tubes)

Plate Voltage	2000	2500	3000	Vdc
Screen Voltage	325	325	325	Vdc
Grid Voltage[1,2]	-60	-60	-60	Vdc
Zero-Signal Plate Current	500	500	500	mAdc
Max Signal Plate Current	1.78	1.77	1.75	Adc
Zero-Signal Screen Current[1]	16	12	10	mAdc
Max Signal Screen Current[1]	70	70	70	mAdc
Plate Output Power	1860	2600	3260	W
Load Resistance (plate to plate)	2040	2850	3860	Ω

1. Approximate value.
2. Adjust to give stated zero-signal plate current.

NOTE: TYPICAL OPERATION data are obtained by calculation from published characteristic curves. Adjustment of the rf grid voltage to obtain the specified plate current at the specified bias, screen and plate voltages is assumed. If this procedure is followed, there will be little variation in output power when the tube is changed, even though there may be some variation in grid and screen current. The grid and screen currents which result when the desired plate current is obtained are incidental and vary from tube to tube. These current variations cause no difficulty so long as the circuit maintains the correct voltage in the presence of the variations in current. When grid drive is applied, the screen voltage required to obtain the specified value of plate current without drawing grid current may vary somewhat from the typical values shown.

RANGE VALUES FOR EQUIPMENT DESIGN

	Min.	Max.	
Heater: Current at 6.0 volts	8.1	9.9	A
Cathode Warmup Time	3	---	min.
Interelectrode Capacitances[1] (grounded cathode connection)			
Input	75	88	pF
Output	10.8	12.8	pF
Feedback	---	0.022	pF

1. In shielded fixture

APPLICATION

MECHANICAL

COOLING - Sufficient cooling must be provided for the anode and ceramic/metal seals to maintain operating temperatures below the rated maximum values:

Ceramic/Metal Seals	250°C
Anode Core	250° C

A flow rate of 25 cubic feet per minute will be adequate for operation at maximum rated plate dissipation at sea level and with inlet air temperatures up to 40°C. Under these conditions, 25 cfm of air flow corresponds to a pressure difference across the tube and socket of 0.2 inch of water column. Experience has shown that if reliable long-life operation is to be obtained, the cooling air flow must be maintained during standby periods when only the heater voltage is applied to the tube.

At higher altitudes and at VHF increased air flow will be required. For example, at an altitube of 10,000 feet, a flow rate of 37 cfm will be required and will be obtained with a pressure drop across tube and socket of 0.3 inch of water column. In selecting a blower for use at high altitudes, care must be taken to assure that the blower is designed to deliver the desired volume of air at the corresponding pressure drop and *at the particular altitude*.

In cases where there is any doubt regarding the adequacy of the supplied cooling, it should be borne in mind that operating temperature is the sole criterion of cooling effectiveness. Surface temperatures may be easily and effectively measured by using one of the several temperature-sensitive paints or sticks available from various chemical or scientific-equipment suppliers. When these materials are used, extremely thin applications must be made to avoid interference with the transfer of heat from the tube to the air stream, which would cause inaccurate indications.

The 4CX1000A is tested for vibration (noise) from 10 Hz to 500 Hz. Vibration level is 10 G units peak 28 Hz to 500 Hz. Below 28 Hz vibration double amplitude is .25 inch.

The 4CX1000A is tested for shock, 50 G, 11 ms, three axes, after which the tube must be within specification for grid bias voltage and gas current.

ELECTRICAL

HEATER - The rated heater voltage for the 4CX1000A is 6.0 volts. The voltage, as measured at the socket, should be maintained at this value to minimize variations in operation and to obtain maximum tube life. In no case should the voltage be allowed to exceed 5% above the rated value.

The cathode and one side of the heater are internally connected.

It is recommended that the heater voltage be applied for a period of not less than 3 minutes before other operating voltages are applied. From an initial cold condition, tube operation will stabilize after a period of approximately 5 minutes.

GRID OPERATION - The grid dissipation rating of the 4CX1000A is zero watts. The design features which make the tube capable

of maximum power operation without driving the grid into the positive region also make it necessary to avoid positive-grid operation.

Although the average grid-current rating is zero, peak grid currents of less than five-milliamperes as read on a five-milliampere meter may be permitted to flow for peak-signal monitoring purposes.

SCREEN OPERATION - Tetrode tubes may exhibit reversed screen current to a greater or lesser degree depending on individual tube design. This characteristic is prominent in the 4CX1000A and, under some operating conditions, indicated negative screen currents in the order of 25 milliamperes may be encountered.

The maximum rated power dissipation for the screen grid in the 4CX1000A is 12 watts and the screen power should be kept below this level. The product of the peak screen voltage and the indicated dc screen current approximates the screen input power except when the screen current indication is near zero or negative. In the usual tetrode amplifier, where no signal voltage appears between cathode and screen, the peak screen voltage is equal to the dc screen voltage. Experience has shown that the screen will operate within the limits established for this tube if the indicated screen current, plate voltage and drive voltage approximate the "Typical Operation" values.

The screen supply voltage must be maintained constant for any values of negative and positive screen currents that may be encountered. Dangerously high plate currents may flow if the screen power supply exhibits a rising voltage characteristic with negative screen current. Stabilization may be accomplished in several different ways. A bleeder resistor may be connected from screen to cathode; a combination of VR tubes may be connected from screen to cathode; or an electron-tube regulator circuit may be used in the screen supply. It is absolutely essential to use a bleeder if a series electron-tube regulator is employed. The screen bleeder current should approximate 70 milliamperes to adequately stabilize the screen voltage. It should be observed that this bleeder power may be usefully employed to energize low-power stages of the transmitter.

PLATE OPERATION - The maximum rated plate dissipation power is 1000 watts. Except for brief periods during circuit adjustments, this maximum value should not be exceeded.

The top cap on the anode cooler may be used as a plate terminal at low frequencies or a circular clamp or spring-finger collet encircling the cylindrical outer surface of the anode cooler may be used at high frequencies.

SPECIAL APPLICATIONS - If it is desired to operate this tube under conditions different from those given here, write to the Power Grid Tube Marketing Department, EIMAC Division of Varian, San Carlos, California 94070, for information and recommendations.

DIMENSIONAL DATA				
DIM.	INCHES		MILLIMETERS	
	MIN.	MAX.	MIN.	MAX.
A	3.335	3.365	84.71	85.47
B	0.807	0.817	20.50	20.75
C	1.870	1.900	47.50	48.26
D	2.250D	2.300D	57.15D	58.42D
E	2.195	2.380	55.75	60.45
F	3.410	3.550	86.61	90.17
G	4.600	4.800	116.84	121.92
H	0.965	0.988	24.51	25.10
J	0.690	0.710	17.53	18.03
K	0.415	0.435	10.54	11.05
L	0.140	0.165	3.56	4.19
M	0.020	0.030	0.51	0.76
N	0.700	0.800	17.78	20.32
P	0.314D	0.326D	7.98D	8.28D
R	55°	65°	55°	65°
S	115°	125°	115°	125°
T	0.470	0.530	11.94	13.46
U	0.025	0.048	0.63	1.22
V	0.045D	0.070D	1.14	1.78

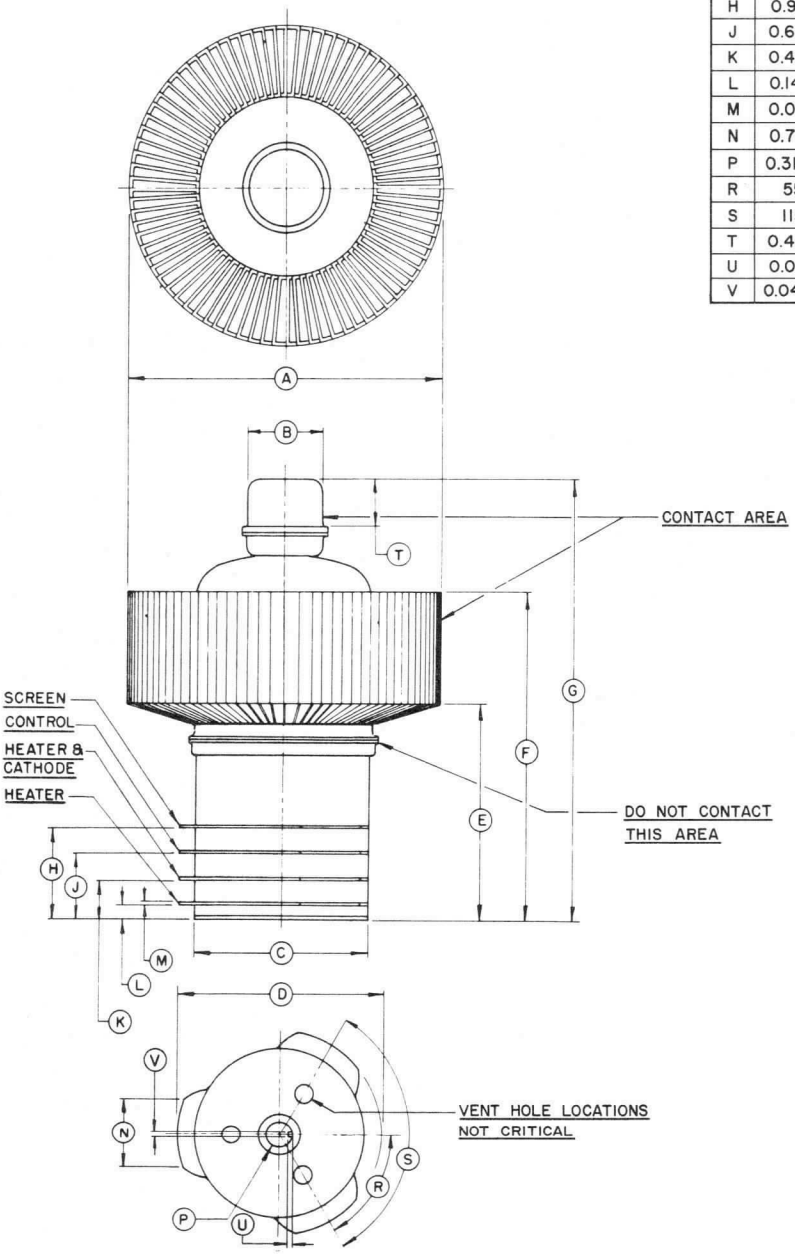

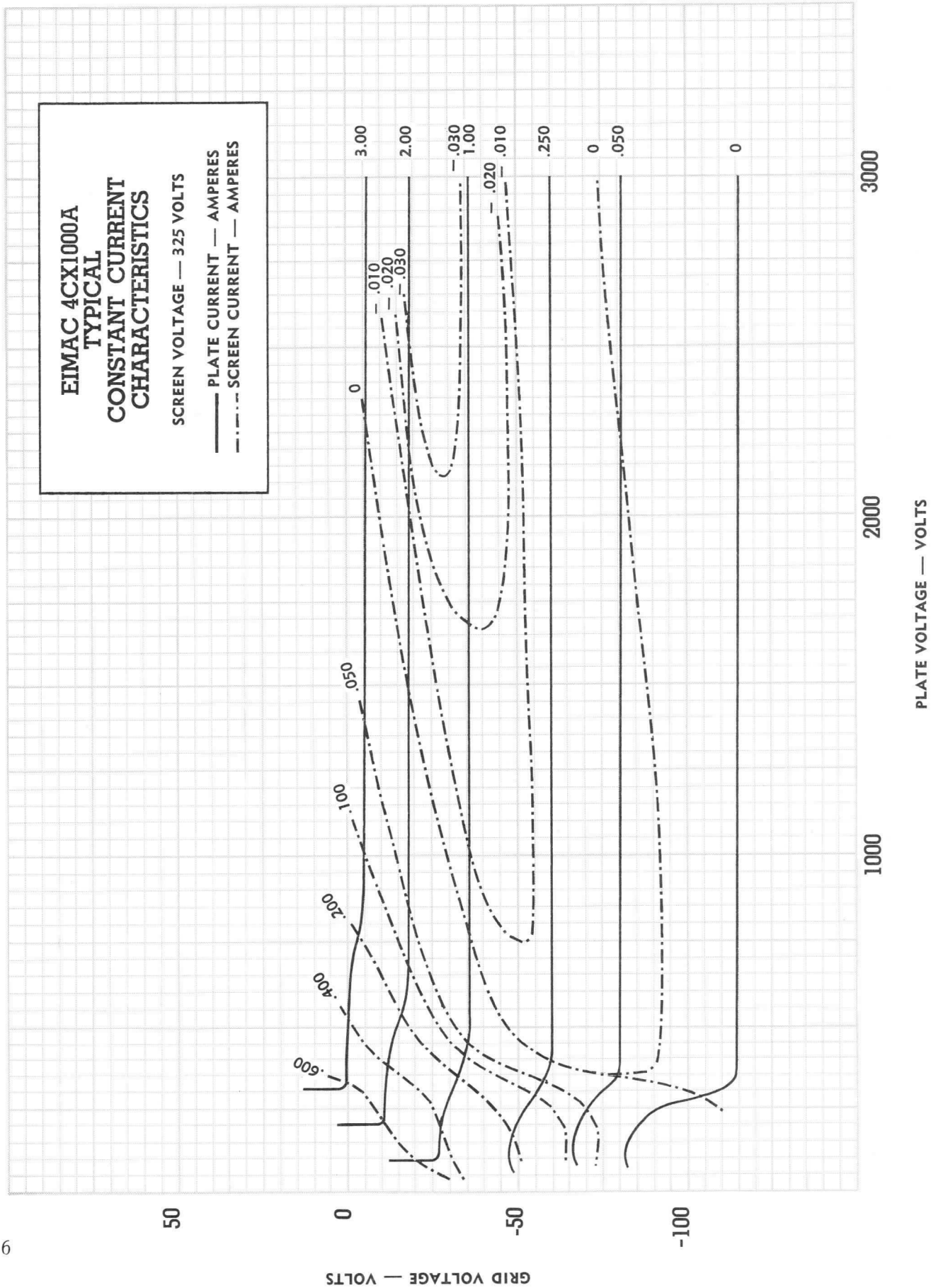
EIMAC 4CX1000A
TYPICAL
CONSTANT CURRENT
CHARACTERISTICS
SCREEN VOLTAGE — 325 VOLTS
PLATE CURRENT — AMPERES
SCREEN CURRENT — AMPERES
3.00
2.00
1.00
.010
.020
.030
.250
0
.050
.100
.200
.400
.600
1000
2000
3000
PLATE VOLTAGE — VOLTS
50
0
-50
-100
GRID VOLTAGE — VOLTS