EIMAC
Division of Varian
SAN CARLOS
CALIFORNIA

8167
4CX300A

CERAMIC POWER TETRODE

The EIMAC 4CX300A is a compact integral-finned external-anode power tetrode having a maximum plate-dissipation rating of 300 watts. The 4CX300A may be operated at frequencies up to 500 megahertz.

The all-ceramic-and-metal construction and the internally-unitized electrode structure combine to make the 4CX300A especially durable and free from mechanically-induced noise under conditions of severe acceleration caused by shock or vibration.

GENERAL CHARACTERISTICS

ELECTRICAL

	Min.	Nom.	Max.	
Cathode: Oxide-Coated, Unipotential				
Heating Time	30	60		S
Cathode-to-Heater Potential			±150	V
Heater: Voltage (See "Application")		6.0		V
Current (E_f=6.0 volts)	2.6		3.1	A
Amplification Factor (Grid to Screen)	4.0		5.6	
Transconductance (I_b=200 ma.)		12,000		μmhos
Direct Interelectrode Capacitances, Grounded Cathode:				
Input	25		33	pF
Output	3.5		4.5	pF
Feedback			0.06	pF

Direct Interelectrode Capacitances, Grounded Grid and Screen:	Min.	Nom.	Max.	
Input		16.2		pF
Output	3.5		4.5	pF
Feedback		0.01		pF
Frequency for Maximum Ratings			500	MHz

MECHANICAL

Base	Special, breechblock terminal surfaces
Recommended Socket	EIMAC SK-700 Series
Operating Position	Any
Maximum Operating Temperatures:	
Ceramic-to-metal Seals	250°C
Anode Core	250°C
Cooling	Forced Air
Maximum Over-all Dimensions:	
Height	2.5 in
Diameter	1.65 in
Net Weight	4 oz
Shipping Weight (Approximate)	1 lb

(Revised 8-30-66) © 1959, 1966, 1968 by Varian

Printed in U.S.A.

RADIO-FREQUENCY POWER AMPLIFIER OR OSCILLATOR

Class-C Telegraphy or FM Telephony
(Key-down conditions)

MAXIMUM RATINGS

DC PLATE VOLTAGE	2000	VOLTS
DC SCREEN VOLTAGE	300	VOLTS
DC GRID VOLTAGE	—250	VOLTS
DC PLATE CURRENT	250	MA
PLATE DISSIPATION	300	WATTS
SCREEN DISSIPATION	12	WATTS
GRID DISSIPATION	2	WATTS

TYPICAL OPERATION

DC Plate Voltage	500	1000	1500	2000	2500‡	2000	volts
DC Screen Voltage	250	250	250	250	250	250	volts
DC Grid Votage	—90	—90	—90	—90	—90	—90	volts
DC Plate Current	250	250	250	250	250	250	ma
DC Screen Current*	45	38	21	19	16	10†	ma
DC Grid Current*	35	31	28	26	25	25†	ma
Peak RF Grid Voltage*	114	114	112	112	111	—	volts
Driving Power*	4.0	3.5	3.2	2.9	2.8	—	watts
Plate Input Power	125	250	375	500	625	500	watts
Plate Output Power	70	190	280	390	500	225†	watts
Heater Voltage						5.0	volts

*Approximate values
†Measured values for a typical cavity amplifier circuit at 500 MHz.
‡For operation below 250Mc. only.

AUDIO-FREQUENCY AMPLIFIER OR MODULATOR

Class-AB_1

MAXIMUM RATINGS (Per tube)

DC PLATE VOLTAGE	2500	VOLTS
DC SCREEN VOLTAGE	400	VOLTS
DC PLATE CURRENT	250	MA
PLATE DISSIPATION	300	WATTS
SCREEN DISSIPATION	12	WATTS
GRID DISSIPATION	2	WATTS

TYPICAL OPERATION (Sinusoidal wave, two tubes unless noted)

DC Plate Voltage	1000	1500	2000	2500	volts
DC Screen Voltage	350	350	350	350	volts
DC Grid Voltage[1]	—55	—55	—55	—55	volts
Zero-Signal DC Plate Current	200	200	200	200	ma
Max-Signal DC Plate Current	500	500	500	500	ma
Max-Signal DC Screen Current	20	16	10	8	ma
Effective Load, Plate to Plate	3500	6200	9500	11,600	ohms
Peak AF Grid Input Voltage (per tube)*	50	50	50	50	volts
Driving Power	0	0	0	0	watts
Max-Signal Plate Output Power	240	430	600	800	watts

*Approximate values.
[1]Adjust grid bias to obtain listed zero-signal plate current.

RADIO-FREQUENCY LINEAR AMPLIFIER

Class-AB_1 (Carrier conditions)

MAXIMUM RATINGS

DC PLATE VOLTAGE	2500	VOLTS
DC SCREEN VOLTAGE	400	VOLTS
DC PLATE CURRENT	250	MA
PLATE DISSIPATION	300	WATTS
SCREEN DISSIPATION	12	WATTS
GRID DISSIPATION	2	WATTS

TYPICAL OPERATION

DC Plate Voltage	1000	1500	2000	2500	volts
DC Screen Voltage	350	350	350	350	volts
DC Grid Voltage[1]	—55	—55	—55	—55	volts
Zero-Signal DC Plate Current	100	100	100	100	ma
DC Plate Current	150	150	150	150	ma
DC Screen Current*	—3	—4	—4	—4	ma
Peak RF Grid Voltage*	25	25	25	25	volts
Plate Output Power	30	50	65	85	watts

*Approximate values.
[1]Adjust grid bias to obtain listed zero-signal plate current.

RADIO-FREQUENCY LINEAR AMPLIFIER

Class-AB_1 (Single-Sideband Suppressed-Carrier Operation)

MAXIMUM RATINGS

DC PLATE VOLTAGE	2500	VOLTS
DC SCREEN VOLTAGE	400	VOLTS
DC PLATE CURRENT	250	MA
PLATE DISSIPATION	300	WATTS
SCREEN DISSIPATION	12	WATTS
GRID DISSIPATION	2	WATTS

TYPICAL OPERATION (Peak-envelope conditions except where noted)

DC Plate Voltage	1000	1500	2000	2500	volts
DC Screen Voltage	350	350	350	350	volts
DC Grid Voltage[1]	—55	—55	—55	—55	volts
Zero-Signal DC Plate Current	100	100	100	100	ma
Peak RF Grid Voltage*	50	50	50	50	volts
DC Plate Current	250	250	250	250	ma
DC Screen Current*	10	8	5	4	ma
Plate Input Power	250	375	500	625	watts
Plate Output Power	120	215	300	400	watts
Two-Tone Average DC Plate Current	190	190	190	190	ma
Two-Tone Average DC Screen Current*	2	—1	—2	—2	ma

*Approximate values.
[1]Adjust grid bias to obtain listed zero-signal plate current.

PLATE-MODULATED RADIO-FREQUENCY AMPLIFIER

Class-C Telephony (Carrier conditions)

MAXIMUM RATINGS

DC PLATE VOLTAGE	1500	VOLTS
DC SCREEN VOLTAGE	300	VOLTS
DC GRID VOLTAGE	—250	VOLTS
DC PLATE CURRENT	200	MA
PLATE DISSIPATION	200	WATTS
SCREEN DISSIPATION	12	WATTS
GRID DISSIPATION	2	WATTS

TYPICAL OPERATION

DC Plate Voltage	500	1000	1500 volts
DC Screen Voltage	250	250	250 volts
DC Grid Voltage	—100	—100	—100 volts
DC Plate Current	200	200	200 ma
DC Screen Current*	31	22	20 ma
DC Grid Current*	15	14	14 ma
Peak RF Grid Input Voltage*	118	117	117 volts
Driving Power*	1.8	1.7	1.7 watts
Plate Input Power	100	200	300 watts
Plate Output Power	60	145	235 watts

*Approximate values.

NOTE: "TYPICAL OPERATION" data are obtainable by calculation from published characteristic curves and confirmed by direct tests. The driving power and output power shown are substantially correct at frequencies below 175 MHz. Allowance must be made for grid and plate circuit losses. At frequencies above 175 MHz. additional allowance must be made for high-frequency effects within the tube itself. Adjustment of the rf grid drive to obtain the specified plate current at the specified grid bias, screen voltage, and plate voltage is assumed. If this procedure is followed, there will be little variation in output power when tubes are changed, even though there may be some variations in grid and screen currents. The grid and screen currents which result when the desired plate current is obtained are incidental and vary from tube to tube. These current variations cause no difficulty so long as the circuit maintains the correct voltage in the presence of the variations in current. If grid bias is obtained principally by means of a grid resistor, the resistor must be adjustable to obtain the required bias voltage when the correct rf driving voltage is applied.

APPLICATION

MECHANICAL

Mounting — The 4CX300A may be operated in any position. Recommended sockets for the 4CX300A are the EIMAC Air-System Sockets type SK-700 (ungrounded cathode) or type SK-710 (cathode and one heater contact grounded). Both sockets provide connections to all electrodes except the anode and each incorporates a screen by-pass capacitor of approximately 1100 $\mu\mu$f. The SK-606 chimney is recommended for use with the SK-700 and SK-710 sockets.

Other sockets suitable for use with the 4CX300A include the SK-740, SK-760, and SK-770. These sockets do not incorporate screen by-pass capacitors. The SK-760 and SK-770 incorporate integral air chimneys. Screen contacts are connected to the mounting flange in the SK-770 and are, therefore, grounded when the socket is installed in the usual manner.

Cooling — The maximum rated ceramic-to-metal seal temperature for the 4CX300A is 250°C. Adequate forced-air cooling must be provided to assure that this maximum temperature rating is not exceeded. Air flow requirements to maintain seal temperatures at 200°C in 50°C ambient air are tabulated below.

	Sea Level		10,000 Feet	
Plate Dissipation (watts)	Air Flow (CFM)	Pressure Drop (inches of water)	Air Flow (CFM)	Pressure Drop (inches of water)
100	2.2	0.065	3.2	0.095
150	3.4	0.14	4.9	0.21
200	4.6	0.26	6.7	0.37
250	5.9	0.40	8.6	0.58
300	7.2	0.58	10.5	0.85

A new, more efficient cooling fin design is incorporated in the 4CX300A which results in lower airflow requirements. This is reflected in the table above (which assumes the use of an EIMAC SK-700 or SK-710 socket and SK-606 chimney).

At high altitudes and high ambient temperatures the flow rate must be increased to obtain equivalent cooling. The flow rate and corresponding pressure differential must be determined individually in such cases, using the maximum rated temperature as the criterion for satisfactory cooling.

Cooling effectiveness should also be determined on an individual basis if the 4CX300A is operated immersed in an insulating fluid such as silicone oil, again using the maximum rated temperature as the criterion.

Impact and Vibration — The 4CX300A is designed to operate under impact or vibration capable of disabling a conventional tube of similar power capabilities. Impact forces up to 50g with 11-millisecond duration, or vibratory accelerations up to 20g at frequencies from 20 to 2000 cycles per second, will not destroy a normal 4CX300A unless unduly prolonged.

It is not suggested that the 4CX300A be subjected to abusive treatment unnecessarily, but in applications where operation under severe environmental conditions is unavoidable the 4CX300A will provide more reliable service than will conventional tubes.

ELECTRICAL

Heater Operation — The rated heater voltage for the 4CX300A is 6.0 volts. At frequencies higher than 300 megacycles the heater voltage should be reduced according to the following schedule:

Frequency (MHz)	Heater Voltage (Volts)
Up to 300	6.00
300 to 400	5.75
400 to 500	5.50

The heater voltage must be maintained within ±5% of the selected operating voltage if variations in circuit performance are to be minimized and best tube life obtained.

Cathode Operation — The 4CX300A employs a cylindrical indirectly-heated oxide-coated unipotential cathode. The minimum warm-up time is 30 seconds when rated heater voltage is applied.

Grid Operation — The 4CX300A control grid has a maximum dissipation rating of 2.0 watts, and precautions should be observed to avoid exceeding this rating. The grid bias and driving power should be kept near the values shown in the Typical Operation sections of the data sheet whenever possible.

At frequencies higher than 300 MHz., the driving power required by the circuits associated with the tube begins to increase, until at 500 MHz., as much as 30 watts of driving power may be required. The power dissipated by the control grid increases only slightly, however, in spite of the greatly increased driving power required by the circuit. Satisfactory 500-megahertz operation of the 4CX300A in a stable, "straight-through" amplifier is indicated by grid-current values below approximately 25 milliamperes.

In class-A and class-AB_1 amplifiers, where no grid current flows, the grid bias voltage may be applied through a resistor. The maximum permissible series resistance per tube is 100,000 ohms.

Screen Operation — The maximum rated screen dissipation for the 4CX300A is 12 watts. The maximum rated dc screen supply voltage is 300 volts when the tube is operated in class-C amplifier or oscillator service, and 400 volts when the tube is operated in class-AB or class-B amplifier service.

Under certain operating conditions the screen current of a tetrode may reverse. This makes it dangerous to rely on a screen-dropping resistor or a series regulator to supply the screen voltage unless a bleeder or regulator tube is connected from screen to cathode. This bleeder should draw at least 15 milliamperes for each tube connected to the screen supply.

The power input to the screen can be calculated from the voltage and current whenever

the screen-to-cathode potential does not vary. Screen modulation or cathode driving of tetrode amplifiers can lead to errors in measurement of screen input when the effective voltage and current exceed the indicated dc values. When there is reason to suspect that the screen input exceeds the indicated power, it is advisable to maintain the indicated screen power input below approximately 75% of the rated screen dissipation.

A screen by-pass capacitor of approximately 1100 $\mu\mu f$ is incorporated in the body of the EIMAC SK-700 and SK-710 Air-System Sockets and is adequate for normal amplifier operation at high and ultra-high radio frequencies. Operation at low radio frequencies or audio frequencies may require that additional capacitance be connected externally. In the latter case, the screen by-pass capacitance within the socket helps to eliminate the high-frequency parasitic oscillations occasionally encountered in tetrode amplifiers.

The self-neutralizing frequency of the 4CX300A is above the useful high-frequency limit for the tube when either of the sockets with integral screen by-pass capacitors is used.

Plate Operation—The 4CX300A has a finned external anode for forced-air cooling. Connection to the anode may be made at the top cap or cylindrical cooler shell. The latter is usually used when the tube is installed in coaxial lines or cavities.

The absolute maximum plate-dissipation rating for the 4CX300A is 300 watts, which is also the rated maximum dissipation for class-C amplifier or oscillator applications and for class-B or class-AB amplifier applications. When the 4CX300A is used in plate-modulated amplifier applications, the plate-dissipation rating is 200 watts under carrier conditions, rising to 300 watts under 100% sine-wave modulation. Plate dissipation may be permitted to exceed the maximum rated value for brief periods, such as may occur while tuning.

The maximum rated plate voltage for class-AB_1 operation at frequencies up to 500 megahertz is 2500 volts. In class-C telegraphy and plate-modulated service the maximum rated plate voltage for operation up to 500 megahertz is 2000 and 1500 volts respectively. However, at frequencies below 250 megahertz, a plate potential of 2500 volts may be used in class-C telegraphy and FM telephony service.

Modulation — The 4CX300A can be modulated by any of the methods commonly used with tetrode tubes. Its large reserve plate dissipation makes it especially suited for use in screen-modulated and linear amplifiers in which the plate efficiency is low.

Plate modulation can be applied to the 4CX-300A when it is operated as a class-C amplifier. To obtain 100% modulation with minimum distortion the screen supply voltage should be modulated in phase with the modulation applied to the plate supply voltage. Screen voltage modulation factors between 0.75 and 1.00 may be used.

"Self-modulation" of the screen by means of a resistor in series with the screen supply line is not recommended because of the effects which require a bleeder from screen to cathode as described under "Screen Operation."

Special Applications — If it is desired to operate this tube under conditions widely different from those given here, write to EIMAC, Division of Varian, for information and recommendations.

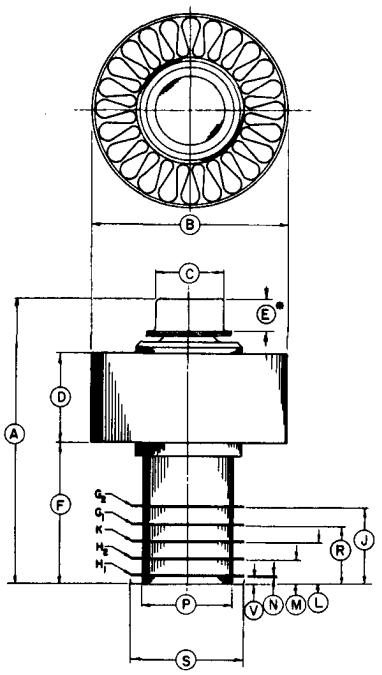

DIMENSION DATA			
REF	NOM.	MIN.	MAX.
A	2.400	2.300	2.500
B	1.625	1.610	1.640
C	.566	.559	.573
D	.750	.710	.790
E		.240	.280
F	1.164	1.133	1.195
J	.622	.602	.642
L	.344	.329	.359
M	.203	.193	.213
N	.015	.010	.020
P	.755	.740	.770
R	.485	.470	.500
S	.946	.936	.956
T	60°		
U	.175	.170	.185
V	.061	.050	.072

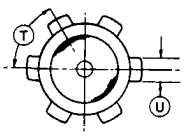

*CONTACT SURFACE

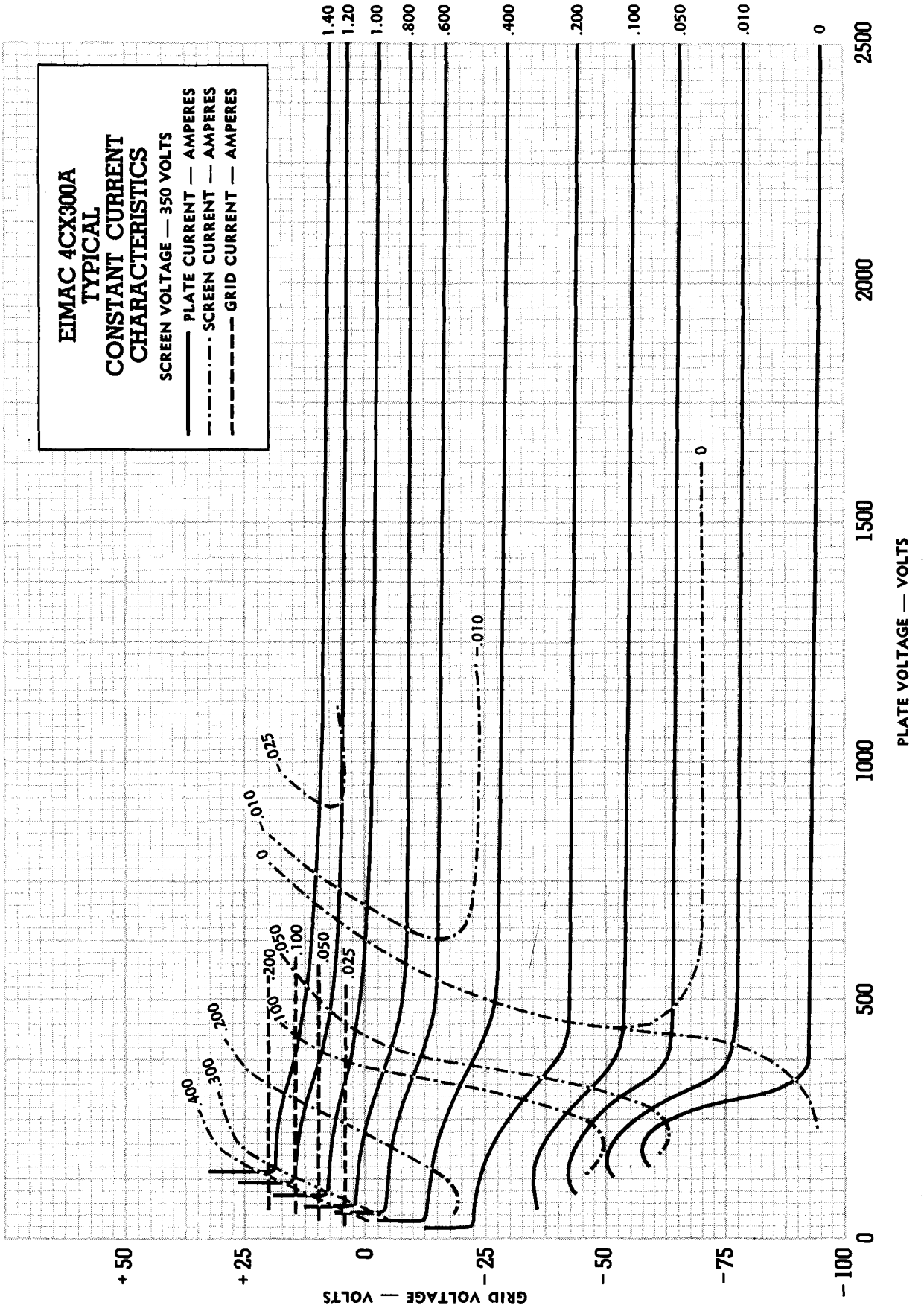
EIMAC 4CX300A
TYPICAL
CONSTANT CURRENT
CHARACTERISTICS
SCREEN VOLTAGE — 350 VOLTS
PLATE CURRENT — AMPERES
SCREEN CURRENT — AMPERES
GRID CURRENT — AMPERES
1.40
1.20
1.00
.800
.600
.400
.200
.100
.050
.010
0
PLATE VOLTAGE — VOLTS
0
500
1000
1500
2000
2500
GRID VOLTAGE — VOLTS
+50
+25
0
−25
−50
−75
−100

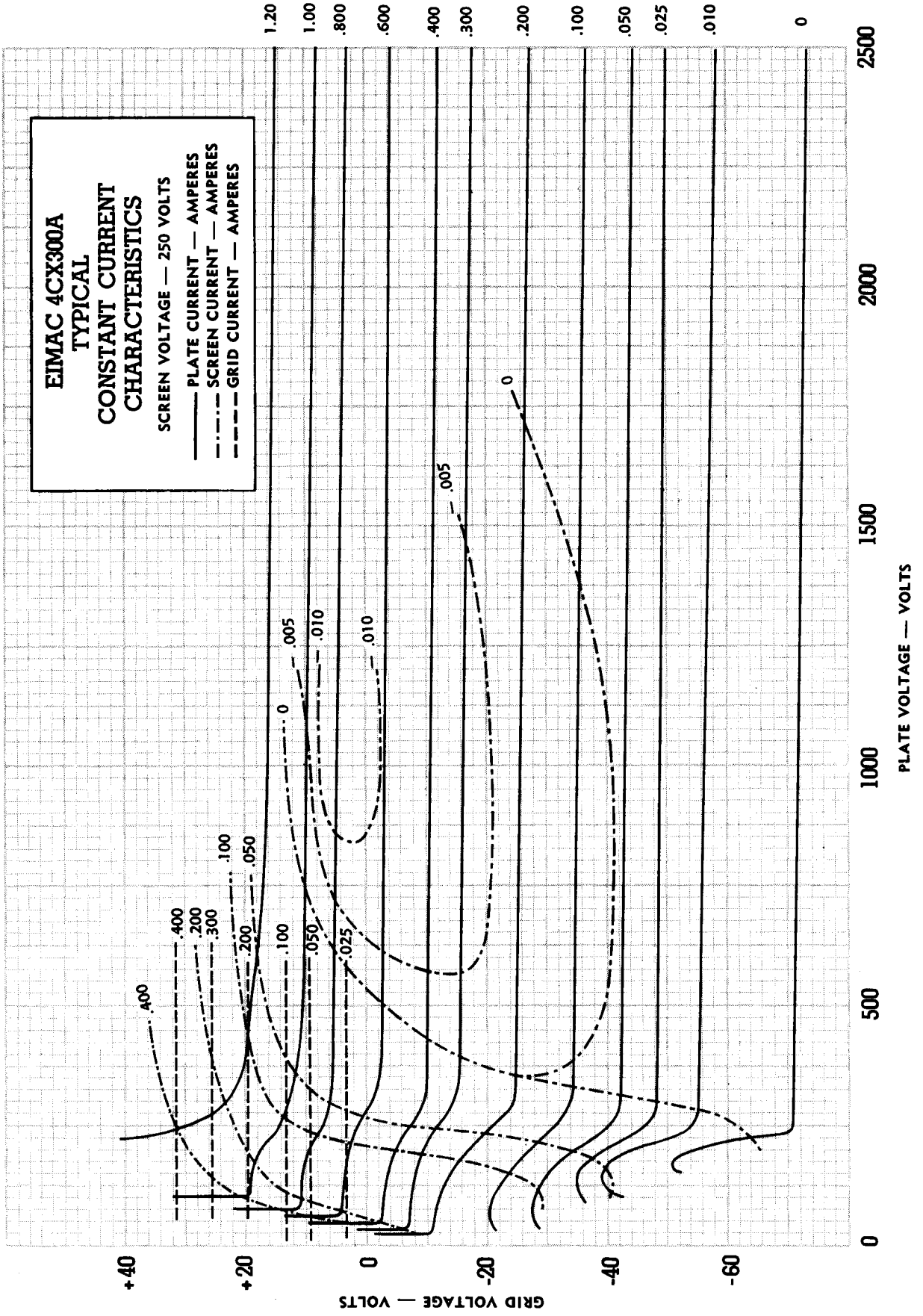
EIMAC 4CX300A
TYPICAL
CONSTANT CURRENT
CHARACTERISTICS
SCREEN VOLTAGE — 250 VOLTS
PLATE CURRENT — AMPERES
SCREEN CURRENT — AMPERES
GRID CURRENT — AMPERES
PLATE VOLTAGE — VOLTS
GRID VOLTAGE — VOLTS
0
500
1000
1500
2000
2500
+40
+20
0
-20
-40
-60
1.20
1.00
.800
.600
.400
.300
.200
.100
.050
.025
.010
0