TECHNICAL DATA

8160
3CX10,000A7

HIGH-MU
POWER TRIODE

The EIMAC 8160/3CX10,000A7 is a ceramic and metal power triode intended to be used as a zero-bias Class-B amplifier in audio or radio-frequency applications. Operation with zero grid bias offers circuit simplicity by eliminating the bias supply. In addition, grounded-grid operation is attractive since a power gain as high as twenty times can be obtained with the 8160/3CX10,000A7.

GENERAL CHARACTERISTICS[1]

ELECTRICAL

Filament: Thoriated-Tungsten	
Voltage	7.5 V
Current	100 A
Amplification Factor (Nominal)	200
Direct Interelectrode Capacitances:[2]	
Grid-Filament	59.0 pF
Grid-Plate	36.0 pF
Plate-Filament	0.2 pF
Frequency for Maximum Ratings	160 MHz

1. Characteristics and operating values are based upon performance tests. These figures may change without notice as the result of additional data or product refinement. EIMAC Division of Varian should be consulted before using this information for final equipment design.
2. Capacitance values are for a cold tube as measured in a shielded fixture in accordance with Electronic Industries Association Standard RS-191.

MECHANICAL

Base	Coaxial
Recommended Air-System Socket	EIMAC SK-1300
Recommended Air Chimney	EIMAC SK-1306
Operating Position	Vertical, base up or down
Cooling	Forced air
Maximum Operating Temperatures:	
Anode Core	250 °C
Ceramic/Metal Seals	250 °C
Maximum Dimensions:	
Height	8.75 in; 222.25 mm
Diameter	7.05 in; 179.07 mm
Net Weight	12 lbs; 5.45 kg

(Revised 2-1-73) © 1963, 1967, 1973 by Varian Printed in U.S.A.

RADIO-FREQUENCY LINEAR AMPLIFIER
Grounded Grid, Class-B

MAXIMUM RATINGS

DC PLATE VOLTAGE	8000	VOLTS
DC PLATE CURRENT	5.0	AMPERES
PLATE DISSIPATION	12	KILOWATTS
GRID DISSIPATION	500	WATTS

1. Approximate value.

TYPICAL OPERATION, Single-Tone Conditions

DC Plate Voltage	7000	7000	V
Zero-Signal DC Plate Current[1]	0.60	0.60	A
Max-Signal DC Plate Current	3.72	5.00	A
Max-Signal DC Grid Current	0.71	1.00	A
Driving Impedance	35	32	Ω
Resonant Load Impedance	1020	745	Ω
Max-Signal Driving Power	885	1540	w
Peak Envelope Plate Output Power	17.7	24.2	kW
Power Gain	13	12	dB

AUDIO-FREQUENCY AMPLIFIER OR MODULATOR
Class B, Grid Driven

MAXIMUM RATINGS (Per Tube)

DC PLATE VOLTAGE	8000	VOLTS
DC PLATE CURRENT	5.0	AMPERES
PLATE DISSIPATION	12	KILOWATTS
GRID DISSIPATION	500	WATTS

1. Approximate value.

TYPICAL OPERATION, Two Tubes, Sinusoidal Wave

DC Plate Voltage	7000	7000	V
DC Grid Voltage	0	0	V
Zero-Signal DC Plate Current[1]	1.20	1.20	A
Max-Signal DC Plate Current	7.50	10.0	A
Max-Signal DC Grid Current	1.50	2.06	A
Driving Power	315	560	W
Peak AF Driving Voltage(Per Tube)	250	310	v
Load Resistance, Plate-to-Plate	2000	1520	Ω
Max-Signal Plate Output Power	35.6	47.7	kW

RADIO-FREQUENCY LINEAR AMPLIFIER
Carrier Conditions, Grounded-Grid

MAXIMUM RATINGS

DC PLATE VOLTAGE	8000	VOLTS
DC PLATE CURRENT	5.0	AMPERES
PLATE DISSIPATION	12	KILOWATTS
GRID DISSIPATION	500	WATTS

1. Approximate value.
2. Modulation Crest Conditions

TYPICAL OPERATION

DC Plate Voltage	7000	V
DC Grid Voltage	0	V
Zero-Signal DC Plate Current[1]	0.60	A
DC Plate Current	2.40	A
DC Grid Current	0.25	A
Driving Impedance[2]	32	Ω
Peak Driving Voltage[2]	310	v
Driving Power	330	W
Plate Output Power	5650	W

RADIO-FREQUENCY POWER AMPLIFIER OR OSCILLATOR
Class-C, Grounded-Grid

MAXIMUM RATINGS

DC PLATE VOLTAGE	8000	VOLTS
DC PLATE CURRENT	4.0	AMPERES
PLATE DISSIPATION	10	KILOWATTS
GRID DISSIPATION	500	WATTS

TYPICAL OPERATION

DC Plate Voltage	7600	V
DC Plate Current	3.68	A
DC Grid Voltage	-110	V
DC Grid Current	775	mA
Peak RF Cathode Voltage	400	v
Cathode Driving Power[1]	1510	W
Plate Output Power	22.5	kW

1. Approximate value.

PLATE-MODULATED RF POWER AMPLIFIER

MAXIMUM RATINGS

DC PLATE VOLTAGE	6500	VOLTS
DC PLATE CURRENT	3.0	AMPERES
PLATE DISSIPATION	6.5	KILOWATTS
GRID DISSIPATION	500	WATTS

TYPICAL OPERATION

DC Plate Voltage	5000	V
DC Plate Current	3.0	A
DC Grid Voltage	-200	V
DC Grid Current	775	mA
Peak RF Grid Voltage	490	v
Grid Driving Power[1]	380	W
Plate Output Power	11.9	kW

1. Approximate value.

NOTE: TYPICAL OPERATION data are obtained by measurement or calculation from published characteristic curves. Adjustment of the rf grid voltage to obtain the specified plate current at the specified bias, and plate voltages is assumed. If this procedure is followed, there will be little variation in output power when the tube is changed, even though there may be some variation in grid current. The grid current which results when the desired plate current is obtained is incidental and varies from tube to tube. These current variations cause no difficulty so long as the circuit maintains the correct voltage in the presence of the variations in current. If grid bias is obtained principally by means of a grid resistor, the resistor must be adjustable to obtain the required bias voltage when the correct rf grid voltage is applied.

MOUNTING - The 3CX10,000A7 must be operated vertically base up or down. The tube must be protected from severe vibration and shock.

COOLING - The maximum temperature rating for the external surfaces of the 3CX10,000A7 is 250°C. Sufficient forced-air cooling must be provided to keep the temperature of the anode core and the temperature of the ceramic/metal seals below 250°C. Tube life is usually prolonged if these areas are maintained at temperatures below this maximum rating. Minimum air-flow requirements to maintain anode-core and seal temperatures below 225°C with an inlet-air temperature of 50°C are tabulated below. The use of these air-flow rates through the recommended socket/chimney and tube combination in the base-to-anode direction provides effective cooling of the tube.

Plate ** Dissipation (Watts)	SEA LEVEL		10,000 FEET	
	Air Flow (CFM)	Pressure Drop (Inches of Water)	Air Flow (CFM)	Pressure Drop (Inches of Water)
4000	105	.24	154	.35
6000	178	.50	275	.80
8000	253	.90	370	1.45
10,000	345	1.4	500	2.30
12,000	483	2.25	710	3.40

** Since the power dissipated by the filament is about 750 watts and since grid dissipation can, under some circumstances, represent another 500 watts, allowance has been made in preparing this tabulation for an additional 1250 watts dissipation.

INPUT CIRCUIT - When the 3CX10,000A7 is operated as a grounded-grid rf amplifier, the use of a resonant tank in the cathode circuit is recommended in order to obtain greatest linearity and power output. For best results with a single-ended amplifier it is suggested that the cathode tank circuit operate at a "Q" of two of more.

CLASS-C OPERATION - Although specifically designed for class-B service, the 3CX10,000A7 may be operated as a class-C power amplifier or oscillator or as a plate-modulated radio-frequency power amplifier.

FILAMENT OPERATION - The rated filament voltage for the 3CX10,000A7 is 7.5 volts. Filament voltage, as measured at the socket, should be maintained at this value to obtain maximum tube life. In no case should it be allowed to deviate from the rated value by more than plus or minus five percent.

INTERELECTRODE CAPACITANCE - The actual internal interelectrode capacitance of a tube is influenced by many variables in most applications, such as stray capacitance to the chassis, capacitance added by the socket used, stray capacitance between tube terminals, and wiring effects. To control the actual capacitance values within the tube, as the key component involved, the industry and the Military Services use a standard test procedure as described in Electronic Industries Association Standard RS-191. This requires the use of specially constructed test fixtures which effectively shield all external tube leads from each other and eliminates any capacitance reading to "ground". The test is performed on a cold tube. Other factors being equal, controlling internal tube capacitance in this way normally assures good interchangeability of tubes over a period of time, even when the tube may be made by different manufacturers. The capacitance values shown in the manufacturer's technical data, or test specifications, normally are taken in accordance with Standard RS-191.

The equipment designer is therefore cautioned to make allowance for the actual capacitance values which will exist in any normal application. Measurements should be taken with the socket and mounting which represent approximate final layout if capacitance values are highly significant in the design.

HIGH VOLTAGE - The 3CX10,000A7 operates at voltages which can be deadly, and the equipment must be designed properly and operating precautions must be followed. Equipment must be designed so that no one can come in contact with high voltages. All equipment must include safety enclosures for high-voltage circuits and terminals, with interlock switches to open the primary circuits of the power supplies and to discharge high-voltage condensers whenever access doors are opened. Interlock switches must not be bypassed or "cheated" to allow operation with access doors open. Always remember that HIGH VOLTAGE CAN KILL.

SPECIAL APPLICATIONS - If it is desired to operate this tube under conditions widely different from those given here, write to Power Grid **Tube Division, EIMAC Division of Varian, 301 Industrial Way, San Carlos, California, 94070, for information and recommendations.**

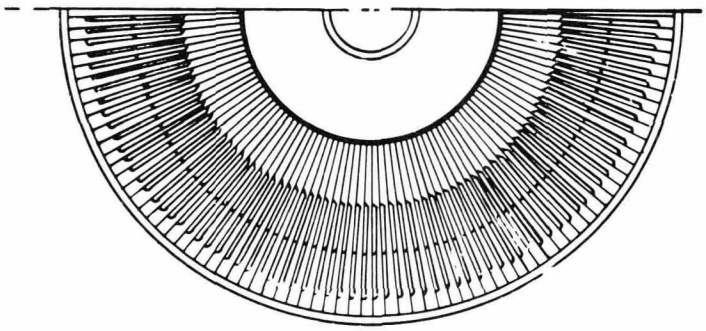

DIMENSIONAL DATA						
DIM	INCHES			MILLIMETERS		
	MIN.	MAX.	REF.	MIN.	MAX.	REF.
A	6.928	7.050	- -	175.97	179.07	- -
B	0.855	0.895	- -	21.72	25.49	- -
C	0.720	0.760	- -	18.29	19.30	- -
D	1.896	1.936	- -	48.16	49.17	- -
E	3.133	3.173	- -	79.58	80.59	- -
F	3.792	3.832	- -	96.32	97.33	- -
H	0.188	- -	- -	4.77	- -	- -
J	0.188	- -	- -	4.77	- -	- -
M	3.950	4.300	- -	100.33	109.22	- -
N	2.412	2.788	- -	61.26	70.81	- -
P	8.250	8.750	- -	209.55	222.25	- -
R	0.986	1.050	- -	25.04	26.67	- -
S	3.412	3.788	- -	86.66	96.21	- -
T	0.375	- -	- -	9.52	- -	- -

NOTES:

1. REF: DIMENSIONS ARE FOR INFO. ONLY & ARE NOT REQUIRED FOR INSPECTION PURPOSES.

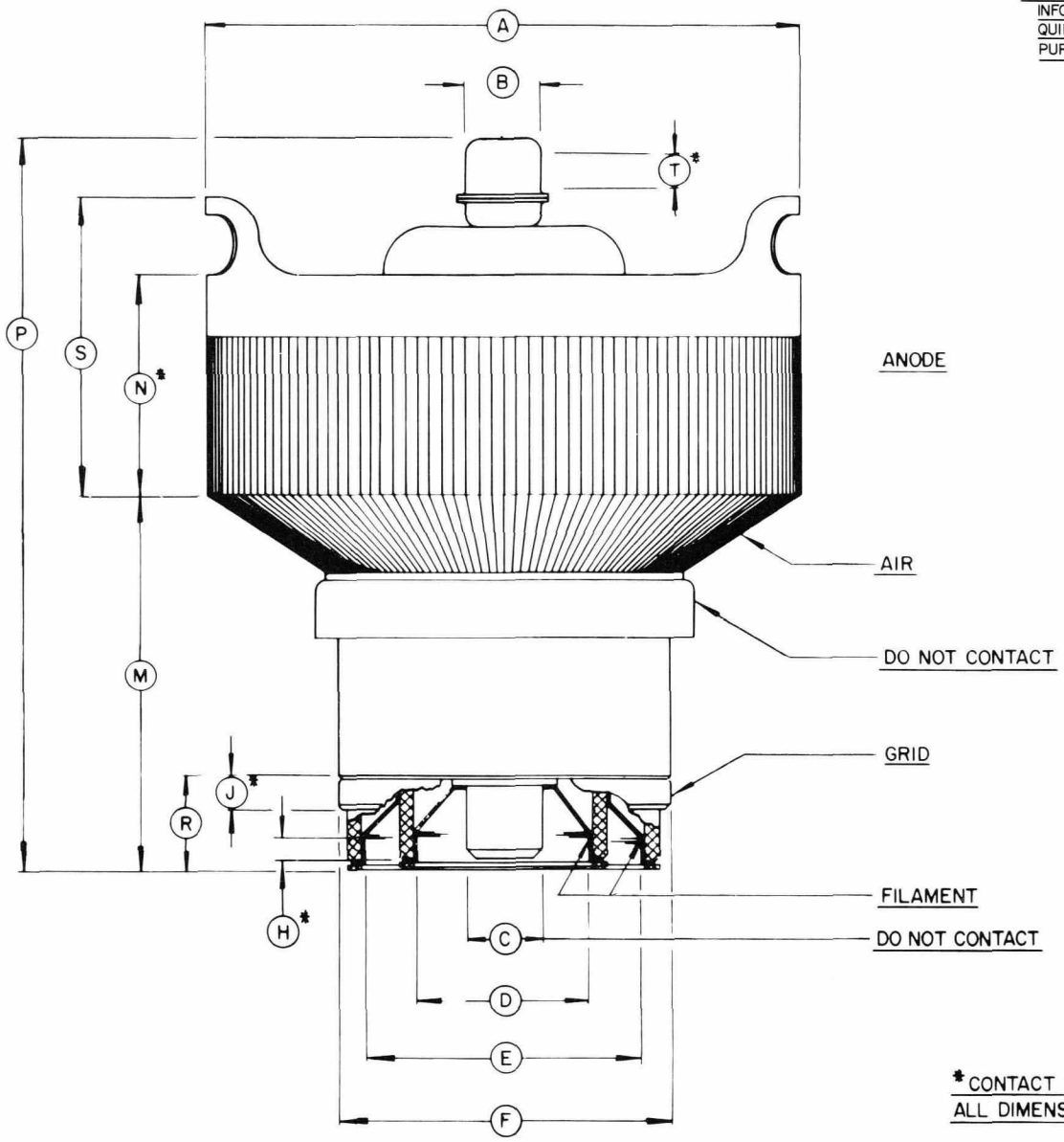

*CONTACT SURFACE
ALL DIMENSIONS IN INCHES

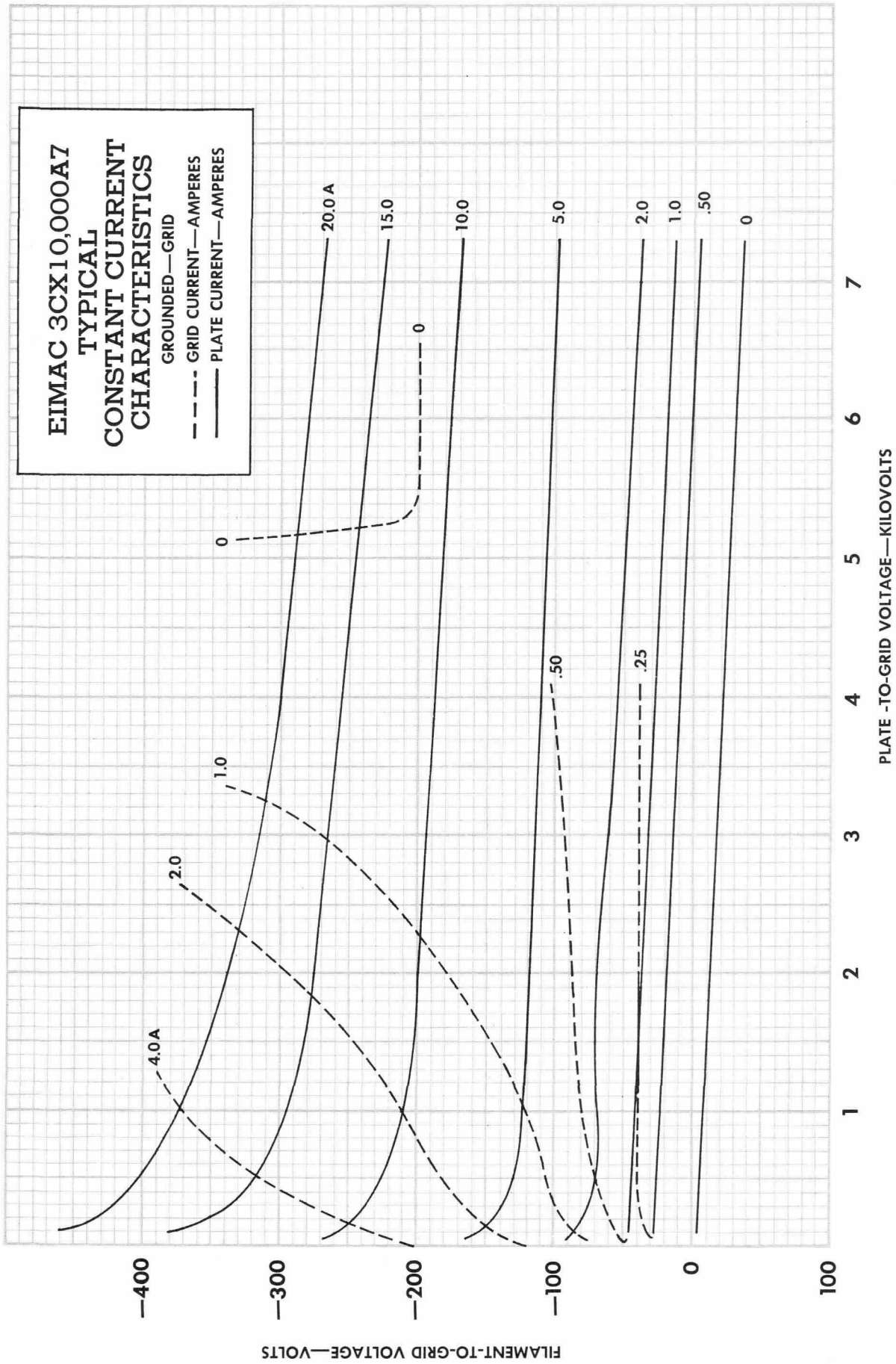
EIMAC 3CX10,000A7
TYPICAL
CONSTANT CURRENT
CHARACTERISTICS
GROUNDED—GRID
GRID CURRENT—AMPERES
PLATE CURRENT—AMPERES
20.0 A
15.0
10.0
5.0
2.0
1.0
.50
0
0
.50
.25
1.0
2.0
4.0A
1
2
3
4
5
6
7
PLATE -TO-GRID VOLTAGE—KILOVOLTS
—400
—300
—200
—100
0
100
FILAMENT-TO-GRID VOLTAGE—VOLTS

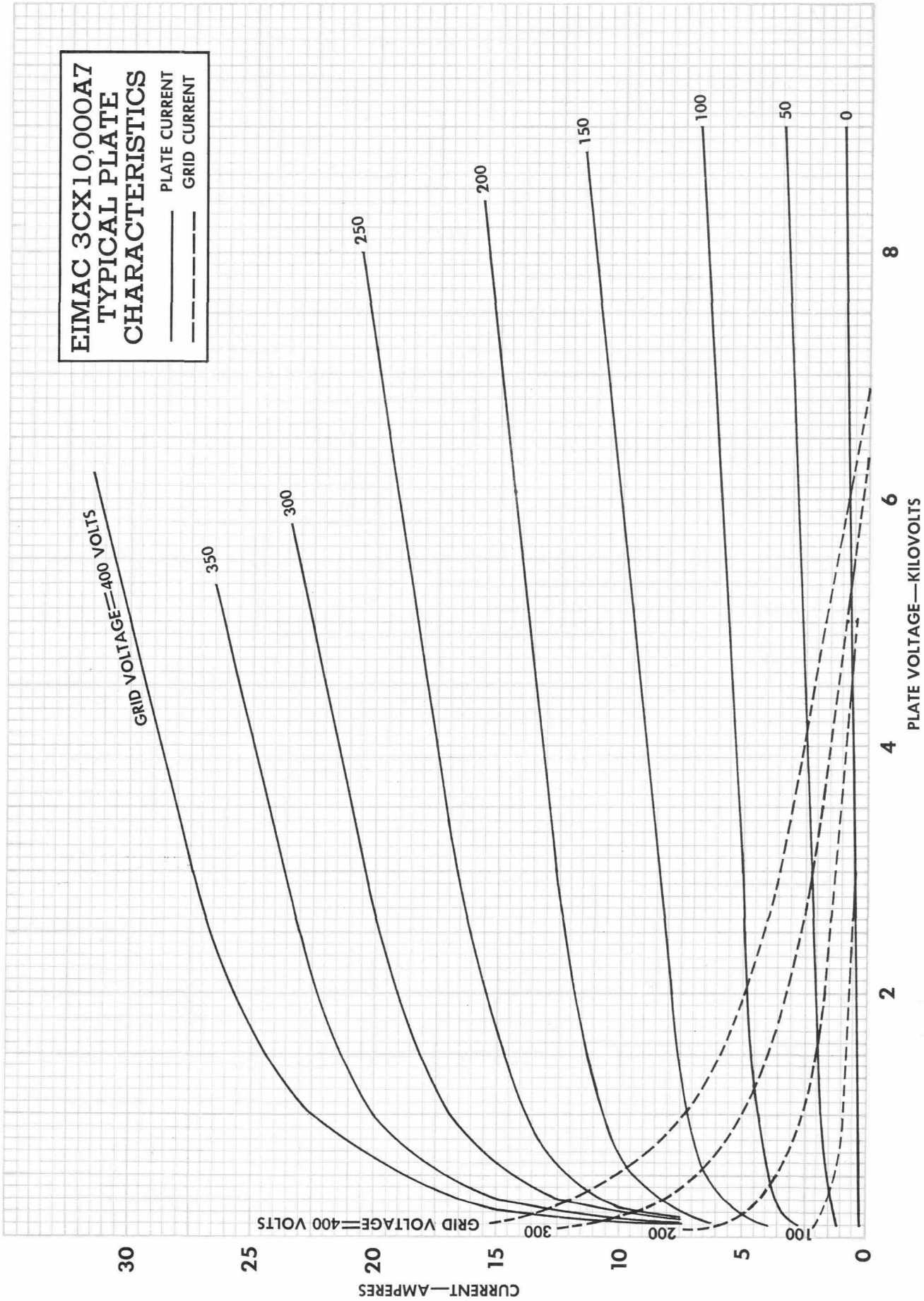
EIMAC 3CX10,000A7
TYPICAL PLATE
CHARACTERISTICS
PLATE CURRENT
GRID CURRENT
GRID VOLTAGE=400 VOLTS
350
300
250
200
150
100
50
0
GRID VOLTAGE=400 VOLTS
300
200
100
CURRENT—AMPERES
30
25
20
15
10
5
0
PLATE VOLTAGE—KILOVOLTS
2
4
6
8