GL-8154

TRAVELING-WAVE TUBE

LESS THAN 10 DB NOISE FIGURE **7000–11,000 MEGACYCLES**
25 DB GAIN **METAL-CERAMIC**

LOW NOISE

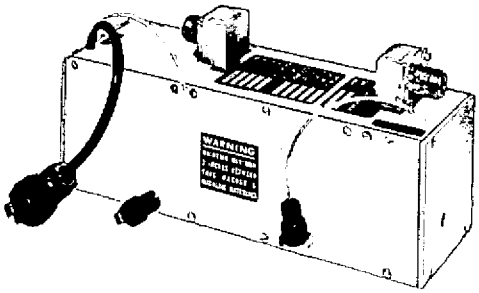

The GL-8154 is a ruggedized, low-noise, broadband traveling-wave tube for use in the 7000-to-11,000 megacycle frequency range. It has a noise figure of less than 10 decibels across the entire band with a power output of 5 milliwatts.

The tube is of metal-and-ceramic construction and is supplied as a complete packaged assembly which includes permanent focusing magnets, connectors, and housing. The entire assembly weighs approximately 11.5 pounds.

The broad bandwidth, low-noise, high gain, freedom from tuning adjustments, and rugged construction make this tube particularly useful in military systems. As the input tube for radar receivers, it has the decided advantages of low noise and protection to the crystal mixer. Other applications include electronic countermeasures equipment, microwave relay systems, and radiometry.

ELECTRICAL

Frequency	7000 to 11,000	Megacycles
Heater		
Voltage	6.3	Volts
Current, nominal	0.3	Ampere
A heater-voltage regulation of ±2 percent is recommended to realize optimum gain and noise figure.		
Focusing Method—Permanent Magnet		
Noise Figure*†, maximum	10	Decibels
Small-Signal Gain, minimum	25	Decibels
Saturated Power Output, nominal	5.0	Milliwatts
Collector Dissipation	1.0	Watt
Impedance, Coaxial		
Input, VSWR	Less than 2.5 to 1	
Output, VSWR	Less than 3.5 to 1	

MECHANICAL

Mounting Position—Any
Connectors
- DC Socket—Winchester PM6P-LS (or equivalent)
- Helix—Winchester PM1P-LS (or equivalent)
- Collector—Winchester PM1P-LS (or equivalent)
- RF Connectors, Coaxial
  - Input—Type N, UG-58/U
  - Output—Type N, UG-58/U

Over-all Dimensions		
Length	9.31	Inches
Width	2.98	Inches
Height	4.38	Inches
Weight (Complete Assembly), approximate	11.5	Pounds

THERMAL

Cooling—Convection

ENVIRONMENTAL

Shock (energized)	30 G for 11 milliseconds on each of three mutually perpendicular axes.
Vibration (operating)	0.031 inches double amplitude from 5 to 55 cycles per second and 5 G from 55 to 1500 cycles per second with sweep over 5 to 1500 cycles per second for 100 minutes on each of three mutually perpendicular axes.
Humidity (non-operating)	MIL-E-5272 C, Paragraph 4.4.1 (Procedure I); i.e., non-operating tube in 95 percent relative humidity atmosphere for 10 days with temperature cycled slowly from approximately 30 C to 71 C each day.
Acoustic noise (operating)	135 decibels, 25 to 12,000 cycles per second random noise.
Altitude (operating)	100,000 feet mean sea level.
Operating temperature, ambient	−20 to +70 C

TYPICAL OPERATING CONDITIONS**

Electrode-No. 1 Voltage, Grid	−10 to −25	Volts
Electrode-No. 2 Voltage, Anode	30 to 60	Volts
Electrode-No. 3 Voltage	40 to 150	Volts
Electrode-No. 4 Voltage	250 to 450	Volts
Helix		
Voltage	700 to 850	Volts
Current, maximum	50	Microamperes
Collector Voltage	900 to 1000	Volts
Beam Current	400 to 700	Microamperes
Magnetic Field Strength, approximate	600	Gausses

* Over band with the same operating voltages that provide minimum gain variation.
† An improved noise figure is possible when this tube is optimized for a narrow frequency band. If requirements exist for an improved noise figure over a narrow band, consult the nearest Power Tube Department sales office.
**All voltages may be isolated from ground; i.e., it is not necessary to operate the cathode, helix, collector, or any other electrode at ground potential. Voltages shown are measured with respect to cathode. For minimum noise and optimum gain characteristics, voltages should be adjusted within ranges specified by instructions accompanying each tube.

PERMANENT-MAGNET PRECAUTIONS

This tube uses a uniform-field permanent magnet as the focusing structure. A label on the tube specifies a nominal lower limit of two inches on magnetic-material proximity. It must be realized that strong external magnets or large amounts of magnetic material at this distance may permanently damage the tube. A small screwdriver will not, while a large a-c transformer or a large sheet of steel at this distance may cause damage by defocusing the tube.

In addition, a related caution is important and must be remembered whenever handling a uniform-field tube. The permanent magnets of these tubes cause a large attractive force between the tube and magnetic material. Unless one is always careful to hold the tube and/or magnetic objects near the tube firmly, the result is sudden direct contact. The magnetic object may cause tube damage due to violations of the minimum spacing requirement.

For small steel hand tools, a two-inch limit is sufficient. For large magnetic objects with magnetic fields of their own, the lower minimum distance should be determined accurately by testing. To accomplish this, the tube may be secured to a suitable three-foot-long dielectric support and the tube case grounded. With the tube operating and its helix current being measured, the tube may be moved slowly by the dielectric support toward the magnetic object. (CAUTION: Appropriate electrical safety procedures should be followed at all times.) The minimum distance for which there is no degradation in r-f performance is the point at which the helix current starts to increase. If a slight degradation in noise figure can be accepted, the helix current may be allowed to increase somewhat as long as it stays below its operating maximum.

NOISE FIGURE AND SMALL-SIGNAL GAIN VS. FREQUENCY

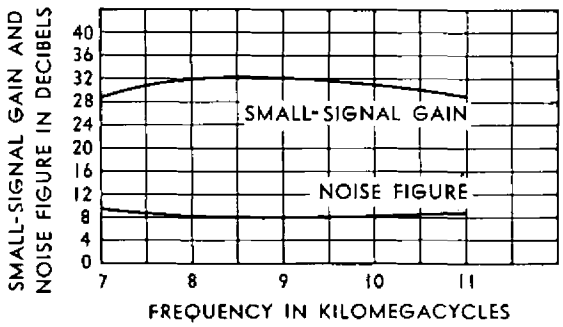

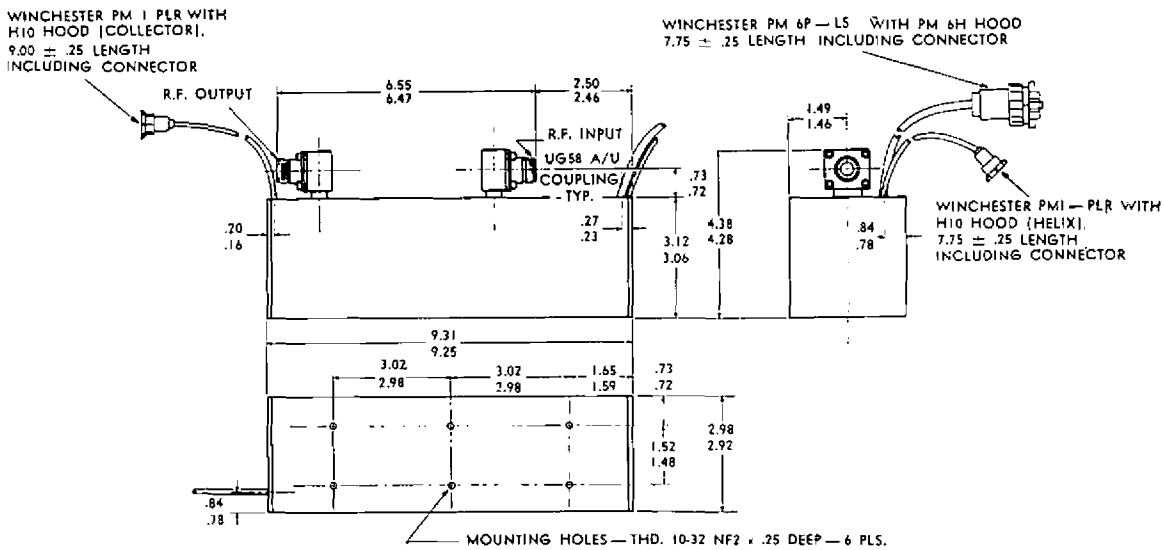

PIN CONNECTIONS PM6P-LS	
ELECTRODE	PIN
CATHODE	F
HEATER	A
NO. 1, GRID	B
NO. 2, ANODE	C
NO. 3, FOCUS	D
NO. 4, FOCUS	E