engineering TUBE DATA

F-8148 *
POWER TRIODE

from JEDEC release #4027,
Dec. 17, 1962

ITT Components Division

DESCRIPTION:

THE F-8148 IS A THREE ELECTRODE TUBE DESIGNED FOR USE AS A MODULATOR, ITS ELECTRICAL CHARACTERISTICS MAKING IT PARTICULARLY SUITABLE FOR CLASS AB_1 CIRCUITS. THE ANODE IS WATER COOLED AND IS CAPABLE OF DISSIPATING 40 KW DURING CONTINUOUS COMMERCIAL SERVICE. THE CATHODE IS A THORIATED TUNGSTEN FILAMENT OF MESH CONSTRUCTION AND MAY BE OPERATED ON D-C OR SINGLE PHASE A-C. MAXIMUM RATINGS APPLY FOR AUDIO FREQUENCY USE ONLY.

ELECTRICAL:

FILAMENT VOLTAGE	7.0	VOLTS
FILAMENT CURRENT	260	AMPERES
FILAMENT STARTING CURRENT	1000	AMPERES
AMPLIFICATION FACTOR		
E_C = -450 VOLTS i_B = 5.0 AMPERES	5.5	
DIRECT INTER-ELECTRODE CAPACITANCE		
GRID-PLATE	88	UUF
GRID-FILAMENT	70	UUF
PLATE-FILAMENT	12	UUF
FILAMENT COLD RESISTANCE	.0035	Ω

MECHANICAL:

MOUNTING POSITION		VERTICAL ANODE, UP OR DOWN		
TYPE OF COOLING		FORCED AIR AND WATER		
MAXIMUM GLASS & SEAL TEMPERATURE (NOTE 1)			180°	C
PLATE DISSIPATION	40	30	20	KW
WATER FLOW (NOTE 2)	30	22	16	GPM
WATER JACKET PRESSURE DROP	10	6	3	PSI
WEIGHT, APPROXIMATE			14	POUNDS

NOTE 1:

AIR FLOW UP TO 50 CFM ON TO THE DISH CENTER MAY BE REQUIRED TO HOLD THE TEMPERATURE OF THE DISH AND SEALS BELOW 180°C. A TEMPERATURE SENSITIVE LACQUER MANUFACTURED BY THE TEMPIL CORPORATION, 132 W. 22ND STREET, NEW YORK 11, NEW YORK IS CONVENIENT FOR THIS MEASUREMENT.

NOTE 2:

USING WATER JACKET RT-54319, TYPE C.

* FORMERLY D-1035

MAXIMUM RATINGS AND TYPICAL OPERATING CONDITIONS:

AUDIO-FREQUENCY POWER AMPLIFIER AND MODULATOR - CLASS AB_1

MAXIMUM RATINGS, ABSOLUTE VALUES

DC PLATE VOLTAGE	8	KV
MAXIMUM SIGNAL DC PLATE CURRENT (NOTE 3)	10	AMPERES
MAXIMUM SIGNAL PLATE INPUT (NOTE 3)	80	KW
PLATE DISSIPATION (NOTE 3)	40	KW
GRID DISSIPATION	800	WATTS

TYPICAL OPERATION
(UNLESS OTHERWISE SPECIFIED, VALUES ARE FOR TWO TUBES)

DC PLATE VOLTAGE	6000	8000	VOLTS
DC GRID VOLTAGE, APPROX. (NOTE 4)	-1200	-1600	VOLTS
PEAK A-F GRID-TO-GRID VOLTAGE	2300	3100	VOLTS
ZERO SIGNAL D-C PLATE CURRENT	.5	.5	AMPERES
MAXIMUM SIGNAL D-C PLATE CURRENT	12	12	AMPERES
PEAK A-F PLATE-TO-PLATE VOLTAGE	6700	11000	VOLTS
EFFECTIVE LOAD RESISTANCE PLATE-TO-PLATE	710	1170	OHMS
MAXIMUM SIGNAL DRIVING POWER	0	0	WATTS
MAXIMUM SIGNAL POWER OUT	30	50	KW

NOTE 3:

AVERAGED OVER ANY AUDIO FREQUENCY CYCLE OF SINE-WAVE FORM.

NOTE 4:

ADJUST TO STATED ZERO SIGNAL DC PLATE CURRENT. EFFECTIVE GRID CIRCUIT RESISTANCE NOT TO EXCEED 200,000 OHMS.

MODULATOR TUBE-PULSE OPERATION:

MAXIMUM RATING, ABSOLUTE VALUES

DC PLATE VOLTAGE		20	KV
PEAK POSITIVE VOLTAGE (INSTANTANEOUS)		25	KV
DC GRID VOLTAGE		-6	KV
PEAK POSITIVE GRID VOLTAGE		2.5	KV
PULSE CATHODE CURRENT	160*	100	AMPERES
GRID DISSIPATION		800	WATTS
DUTY FACTOR		.01	
PULSE LENGTH		2000	uSEC.

* THIS RATING APPLIES ONLY UNDER ELEVATED FILAMENT TEMPERATURE AS SPECIFIED BY E_F = 7.6 VOLTS. REDUCED LIFE WILL RESULT AS A CONSEQUENCE OF CONTINUED OPERATION AT THIS TEMPERATURE.

Typical Operation

DC-Plate Voltage	14	17	KV
Pulse Plate Current	68	80	Amperes
DC Grid Voltage	-3300	-4200	Volts
Pulse Grid Current	0	12	Amperes
Pulse Positive Grid Voltage	0	1000	Volts
Pulse Grid Drive Power	0	12	KW
Plate Output Voltage	7.5	14	KW
Pulse Output Power	510	1200	KW

Additional information for specific applications can be obtained from the

Electron Tube Applications Section
ITT Components Division
Post Office Box 412
Clifton, New Jersey

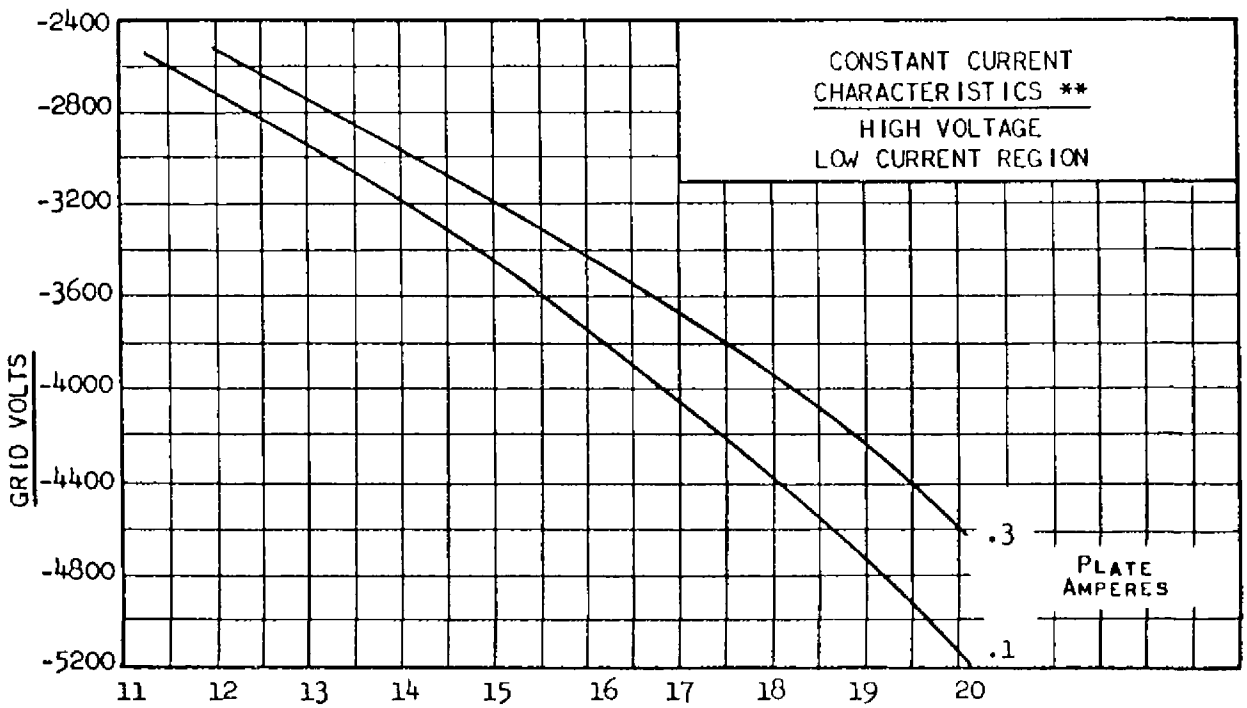

** Grid Voltage can be expected to vary ±15% in the high bias region.

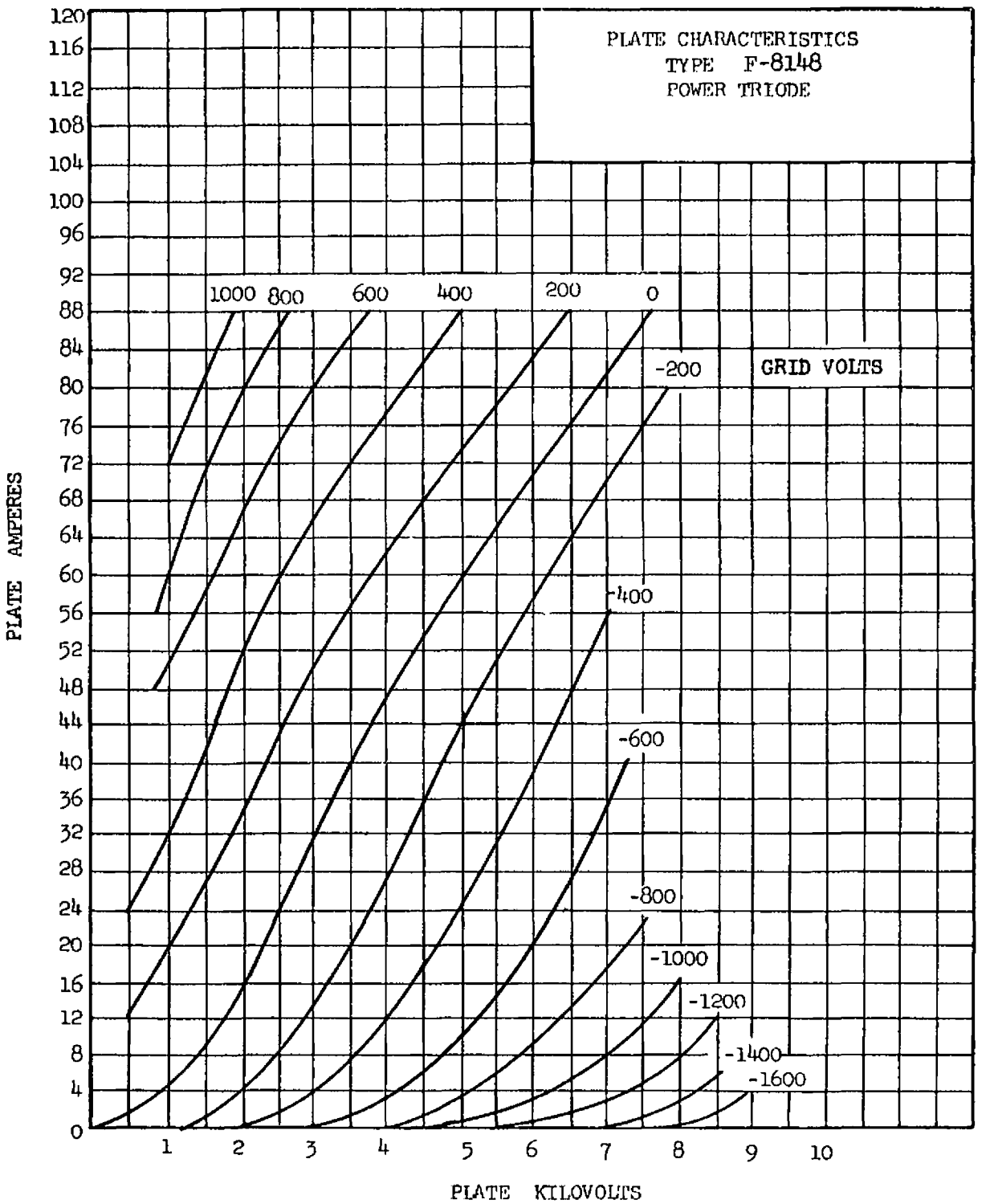
PLATE CHARACTERISTICS
TYPE F-8148
POWER TRIODE
GRID VOLTS
1000
800
600
400
200
0
-200
-400
-600
-800
-1000
-1200
-1400
-1600
PLATE AMPERES
120
116
112
108
104
100
96
92
88
84
80
76
72
68
64
60
56
52
48
44
40
36
32
28
24
20
16
12
8
4
0
1
2
3
4
5
6
7
8
9
10
PLATE KILOVOLTS

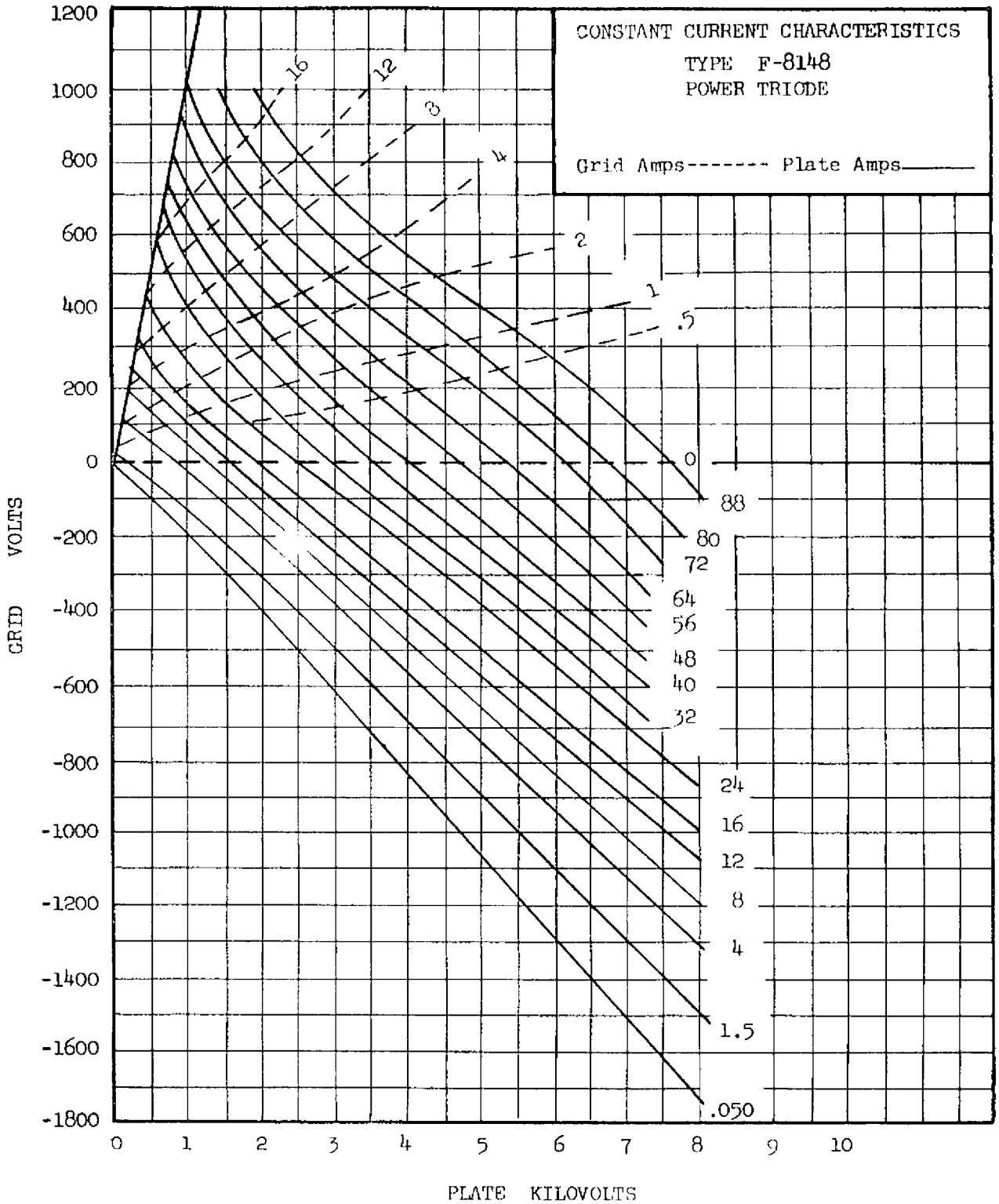
CONSTANT CURRENT CHARACTERISTICS
TYPE F-8148
POWER TRIODE
Grid Amps------- Plate Amps———
16
12
8
4
2
1
.5
0
88
80
72
64
56
48
40
32
24
16
12
8
4
1.5
.050
1200
1000
800
600
400
200
0
-200
-400
-600
-800
-1000
-1200
-1400
-1600
-1800
GRID VOLTS
0
1
2
3
4
5
6
7
8
9
10
PLATE KILOVOLTS

F-8148
POWER
TRIODE

TERMINALS

Black - Grid
Yellow - Fil. 1
Red - Fil. 2

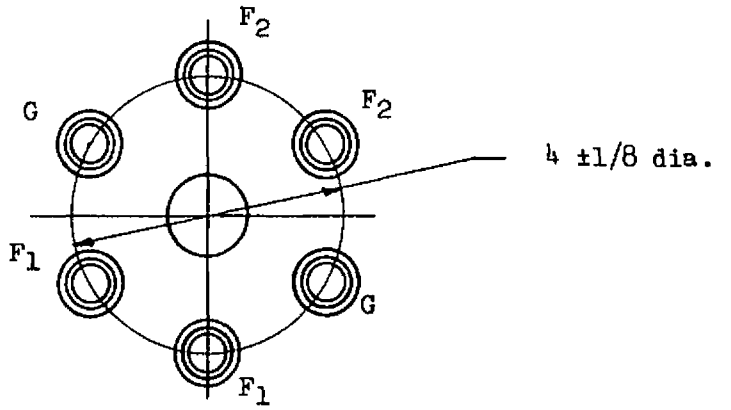

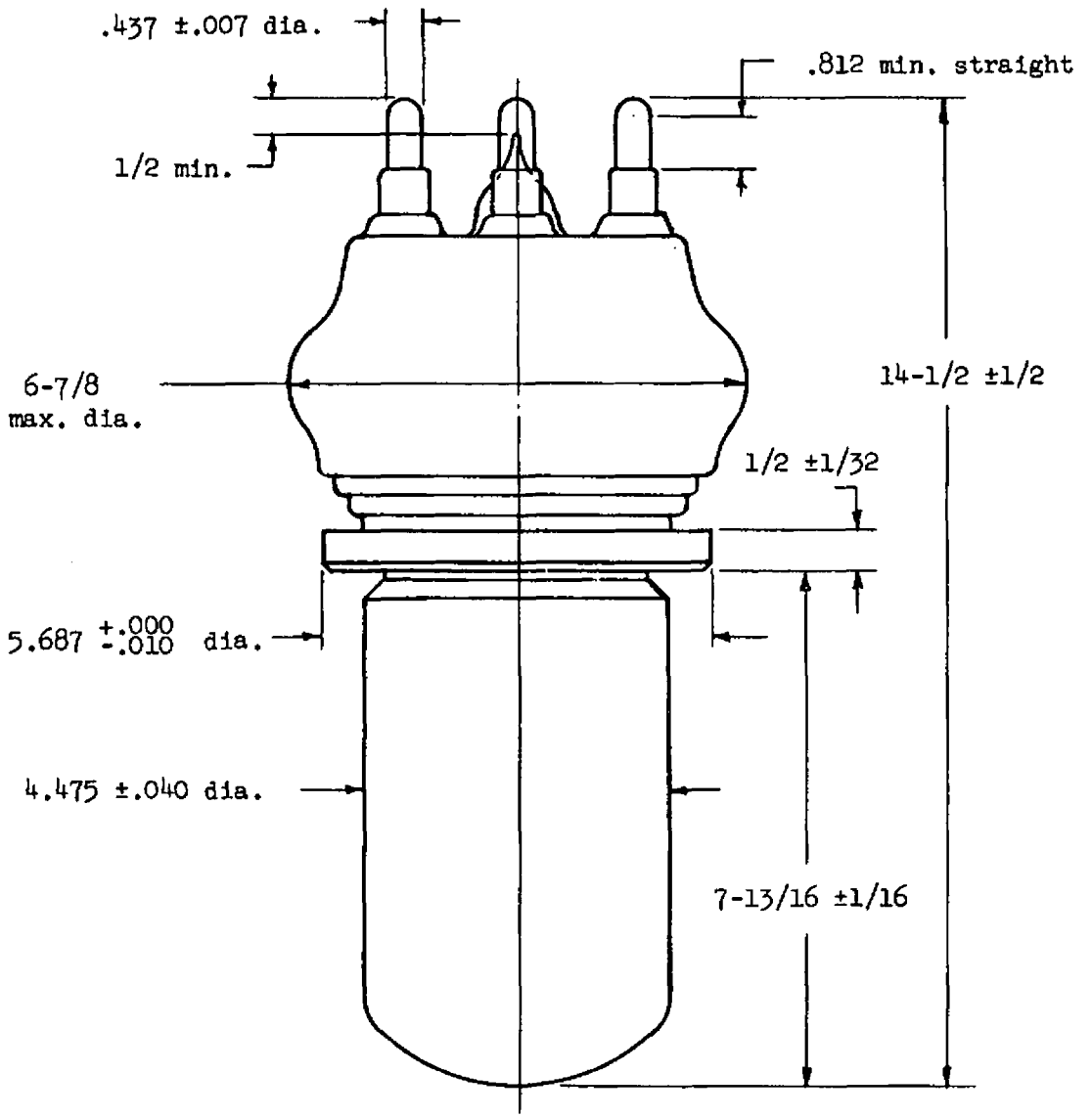

OUTLINE

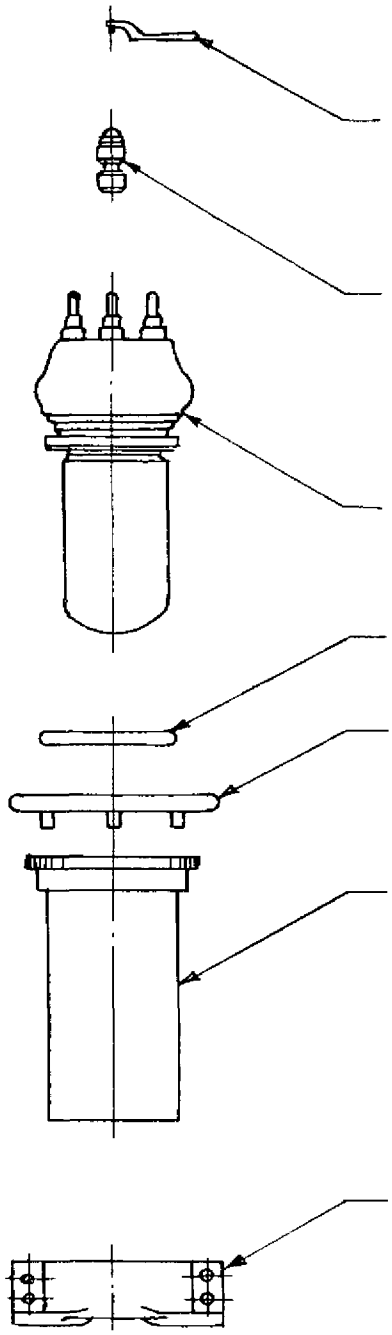

Spanner Wrench
RT-52843-1 (2 req'd)
(Not to scale)

Terminal Connector Assy.
RT-52578-1 (6 req'd)

Tube Type
F-8148

'O' Ring
RT-53836-1

Corona Ring Assy.
RT-54002-1

Water Jacket Helix
RT-54319-12
Type "C"

Mounting Clamp
RT-53492-1

ACCESSORIES