GENERAL DATA

Spectral Response	See Curve
Wavelength of Max. Response	6100 ± 400 Angstroms
Sensitive Material	Cadmium-Sulfide
Shape of Sensitive Area	Circular
Construction	Hermetically Sealed in Glass
8143	Flexible Leads
8143-1	Push-Pin Base
8143-7	Bayonet Base
Outline	See Drawings
Operating Position	Any

ELECTRICAL DATA

RATINGS (Absolute Maximum Values)

Breakdown Voltage[2]	400 VAC
Dissipation	
T-amb = 25°C	300 mW
T-amb = 70°C	25 mW
Ambient Temperature Range	−40 to +70 °C
Illumination	Note 3

CHARACTERISTICS

Cell Resistance[4]	
Illumination 2 FC	
Color Temperature 2870°K	9000 Ohms
Dark Resistance[5]	900,000 Ohms Min.

NOTES:

1. *Minute increases in relative humidity will produce change in color.*
2. *Measured with cell in complete darkness at a pulse rate of 100 pps, 100 μ sec. duration. Voltage in excess of the rated value may damage the cell. Maximum DC voltage is limited by maximum dissipation and minimum dark resistance rating.*
3. *Care should be exercised to prevent localized overheating of the sensitive surface when the cell is used with a lens system.*
4. *Measured after 60 minutes exposure to approximately 50 FC illumination (ambient room light).*
5. *Measured in complete darkness, 10 seconds after removal of 2 FC illumination.*

OUTLINE 8143-1

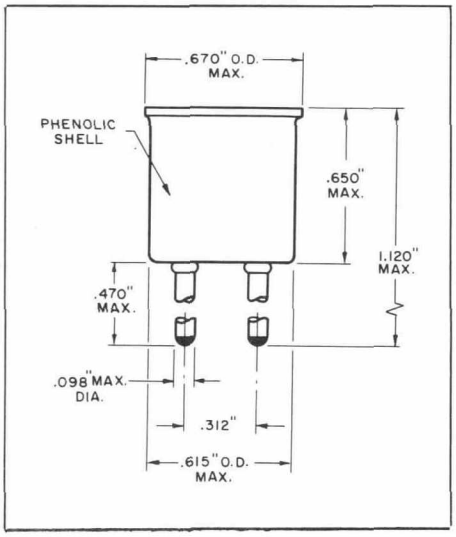

OUTLINE 8143-7

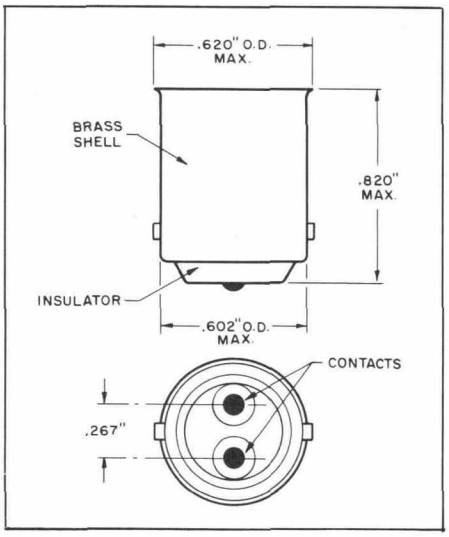

QUICK REFERENCE DATA

The Sylvania Types 8143, 8143-1 and 8143-7 are cadmium sulfide photoconductive cells featuring high sensitivity and hermetically sealed-in-glass construction. The cell is backfilled with gas for a high dissipation safety factor and high voltage capability and includes a blue-dot compound which turns pink[1] if the cell envelope becomes damaged. They feature relatively high resistance (9000 Ohms). They are designed for use in a wide variety of industrial applications, and are particularly suited to direct operation of relays.

OUTLINE 8143

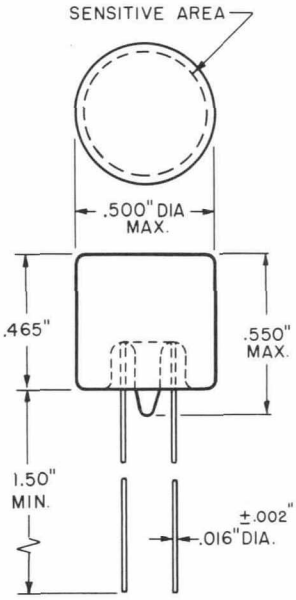

SYLVANIA ELECTRIC PRODUCTS INC.

Electronic Components Group
ELECTRONIC TUBE DIVISION
EMPORIUM, PA.

A Technical Publication
MAY, 1965

File Under
PHOTOCONDUCTORS

SPECTRAL RESPONSE

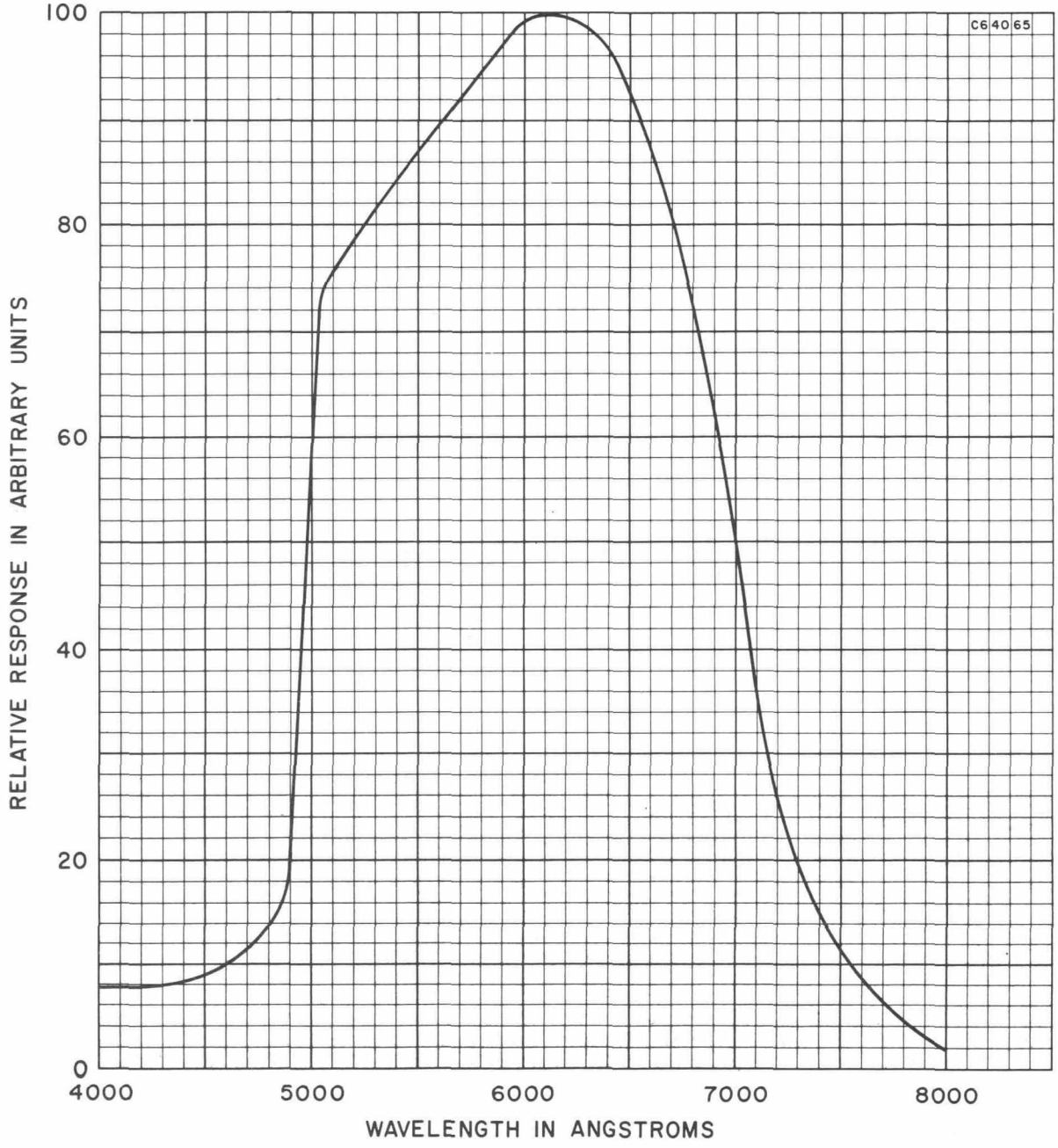

SPECTRAL CHARACTERISTIC OF HUMAN EYE, TUNGSTEN AND FLUORESCENT LAMPS

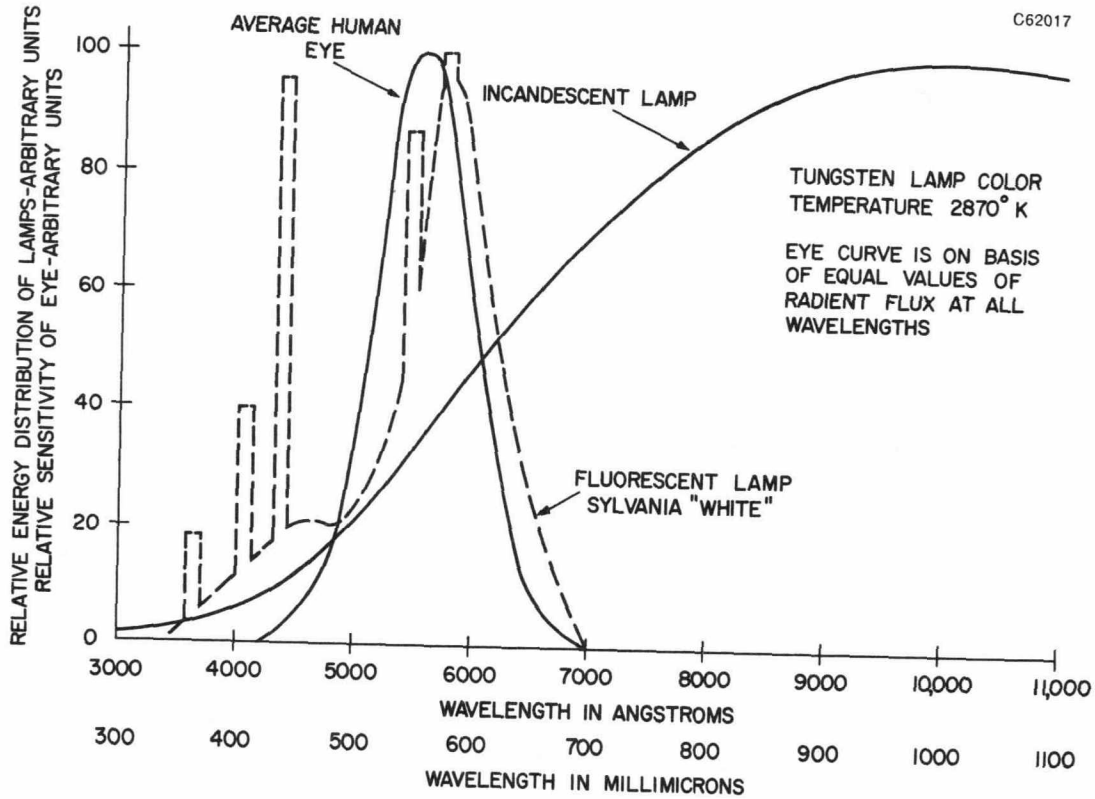

AVERAGE CHARACTERISTICS

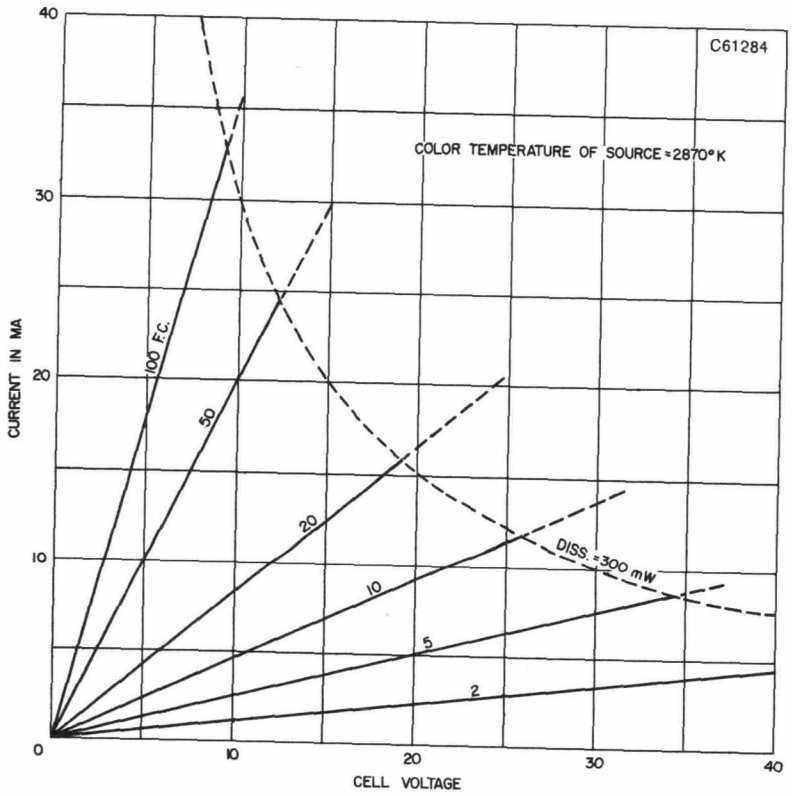

PERMISSIBLE DISSIPATION AS A FUNCTION OF AMBIENT TEMPERATURE

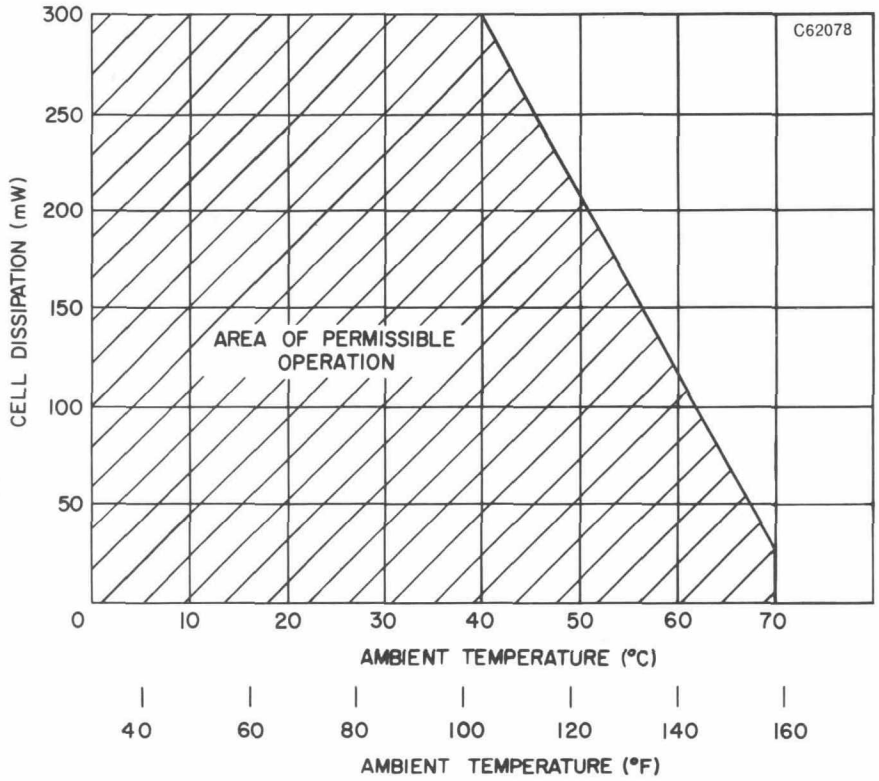
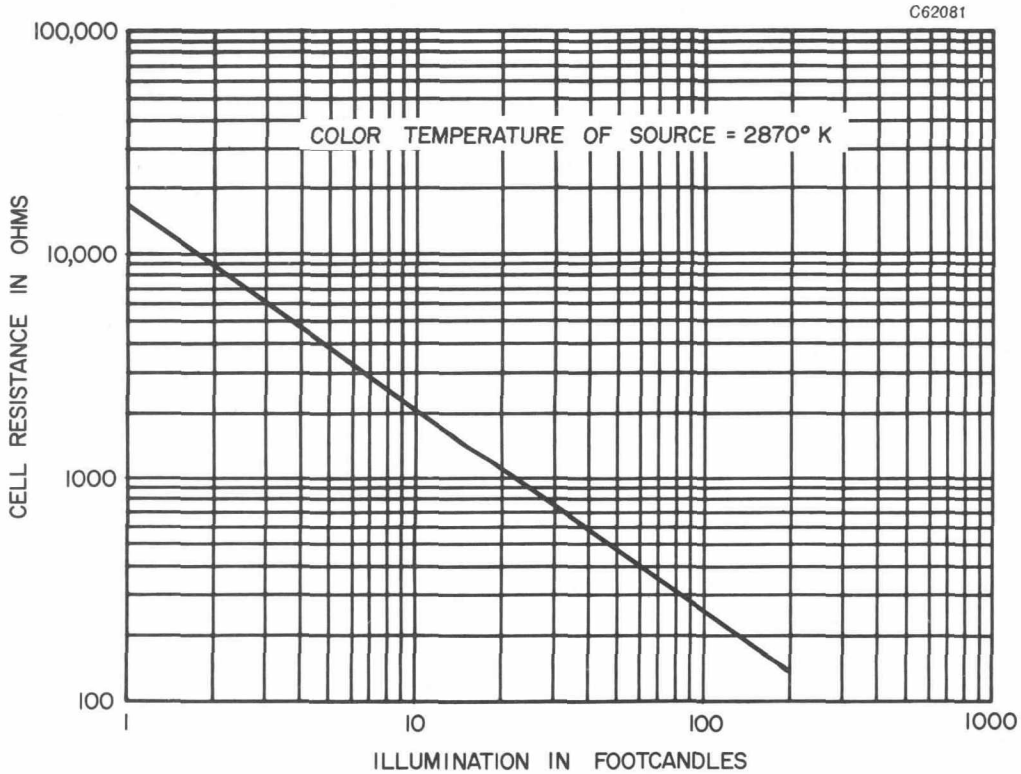
AVERAGE CHARACTERISTICS