from JEDEC release #4487, Nov. 11, 1963

The technical information on this data sheet is of a proprietory nature and is furnished as a customer service for private use only.

8128 OBJECTIVE DATA SHEET

RAYTHEON

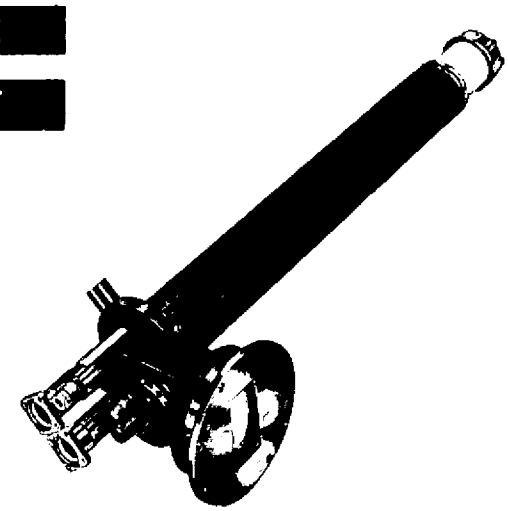

The 8128 is a wide band, 60 kw, (minimum) traveling wave tube designed for pulsed operation over the 2900 to 3100 megacycle range. This tube has a minimum gain of 20 db, and it utilizes a solenoid for the focusing magnetic field. This is a high duty cycle version of the QKW750 which was originally developed under BuShips Contract No. NObsr-72820

The 8128 is designed for use as a driver for the 8129 Amplitron, and it is ideal for frequency diversity type radar applications.

GENERAL CHARACTERISTICS

Typical Electrical Data

Heater Voltage	8 Volts
Heater Current	8.0 Amperes
Cathode Heating Time	5 Minutes
Frequency Range	2900 - 3100 Mc
Peak Power	60 kilowatts (min.)
Average Power Output	1260 Watts (min.)
Magnetic Field	700 Gauss
Pulse Width	30 usec
Duty Cycle	.021
Pulse Voltage	34.5 kilovolts
Peak Current	12 amperes
Perveance	1.9 uperv.
Load VSWR	1.5 Max.

Mechanical Data

Overall Dimensions	See Outline Drawing
Net Weight	20 Pounds (approx.)
Cooling	Liquid
Output Coupling	UG 54 A/U
Mounting Position	Any
Solenoid	Raytheon SWS 100
Termination	Raytheon Le SH 1

12/61

RAYTHEON COMPANY | Microwave and Power Tube Division | WALTHAM 54, MASS.

The specifications for this tube have not been finalized. The tube is in the development stage and is available for engineering analysis purposes only. This engineering information and/or delivery of sample tubes do not imply availability of tubes with the same electrical and/or mechanical characteristics. Changes in ratings and/or dimensions may be made at our discretion as deemed advisable by manufacturing experience or other considerations. For current information concerning this tube contact the nearest Microwave and Power Tube Regional Sales Representative.

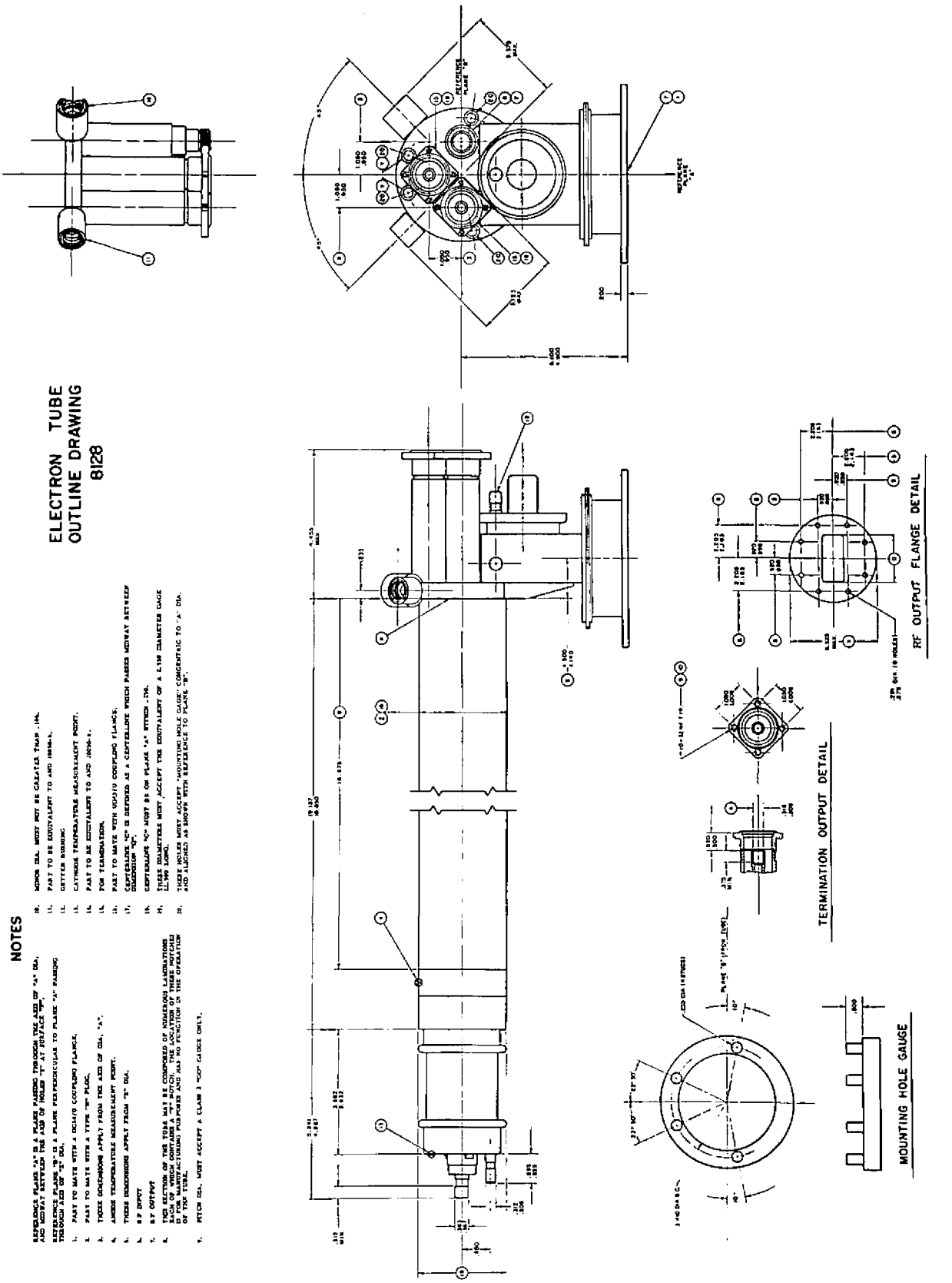
ELECTRON TUBE
OUTLINE DRAWING
8128
NOTES
RF OUTPUT FLANGE DETAIL
TERMINATION OUTPUT DETAIL
MOUNTING HOLE GAUGE