engineering TUBE DATA

F-8109 *
F-8110
POWER
DIODES

from JEDEC release #4005,
Dec. 3, 1962

ITT Components Division

DESCRIPTION

The F-8109 and F-8110 are diodes designed for rectifier service or in special applications in shunting or charging circuits. The exceptionally rugged construction, free of spring tensioning devices and fragile elements, make these types adaptable to a wide range of uses. The cathode is a thoriated tungsten filament of mesh construction.

The F-8109 has a water-cooled, heavy-wall anode capable of 20 kw dissipation. The F-8110 has a forced air-cooled, heavy-wall anode capable of 10 kw dissipation.

ELECTRICAL

Filament Voltage	7.5 volts
Filament Current	210 amperes
Filament Starting Current Full rated filament voltage may be safely applied to the cold filament	
Filament Heating Time, minimum	15 seconds

Maximum Ratings	Shunt	Charging	Rectifier
Max. Peak Inverse Voltage	60	60	60 kv
Max. Peak Plate Current	150	16 rms	36 amperes
Max. Average Plate Current	--	--	12 amperes

Inter-Electrode Capacitance	21 μμf

* Formerly our D-1033A and B.

8-62

ITT ELECTRON TUBE DEPARTMENT
COMPONENTS DIVISION
INTERNATIONAL TELEPHONE AND TELEGRAPH CORPORATION
P.O. BOX 412, CLIFTON, NEW JERSEY

MECHANICAL

Mounting Position				Vertical, anode up or down			
Maximum Glass & Seal Temperature						180°	C.
Type of Cooling		F-8109			F-8110		
Plate Dissipation	20	16	12	10.0	8.0	6.0	kw
Water Flow	7.2	4.6	3.3	---	---	---	
Max. Outgoing Water Temperature		70°			---		C.
Air Flow	---	---	---	750	525	350	cfm
Static Air Pressure	---	---	---	2.0	1.0	.45	in. of water
Max. Incoming Air Temperature		---			45°		C.
Net Weight, approx.		8			45		lbs.

Additional information for specific applications can be obtained from:

Electron Tube Applications Section
ITT Components Division
P.O. Box 412
Clifton, New Jersey

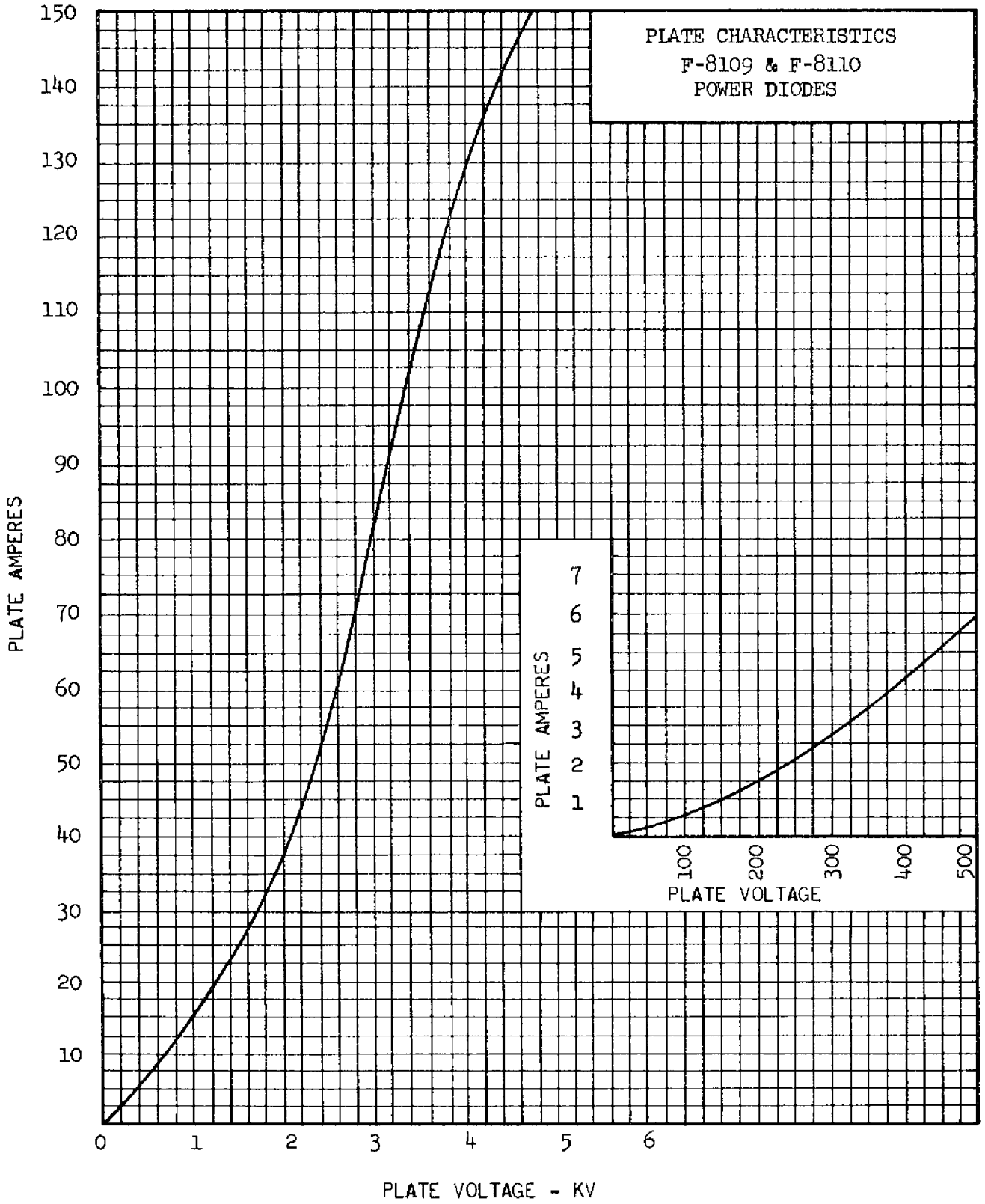
PLATE CHARACTERISTICS
F-8109 & F-8110
POWER DIODES
PLATE AMPERES
150
140
130
120
110
100
90
80
70
60
50
40
30
20
10
0
1
2
3
4
5
6
PLATE VOLTAGE - KV
PLATE AMPERES
7
6
5
4
3
2
1
100
200
300
400
500
PLATE VOLTAGE

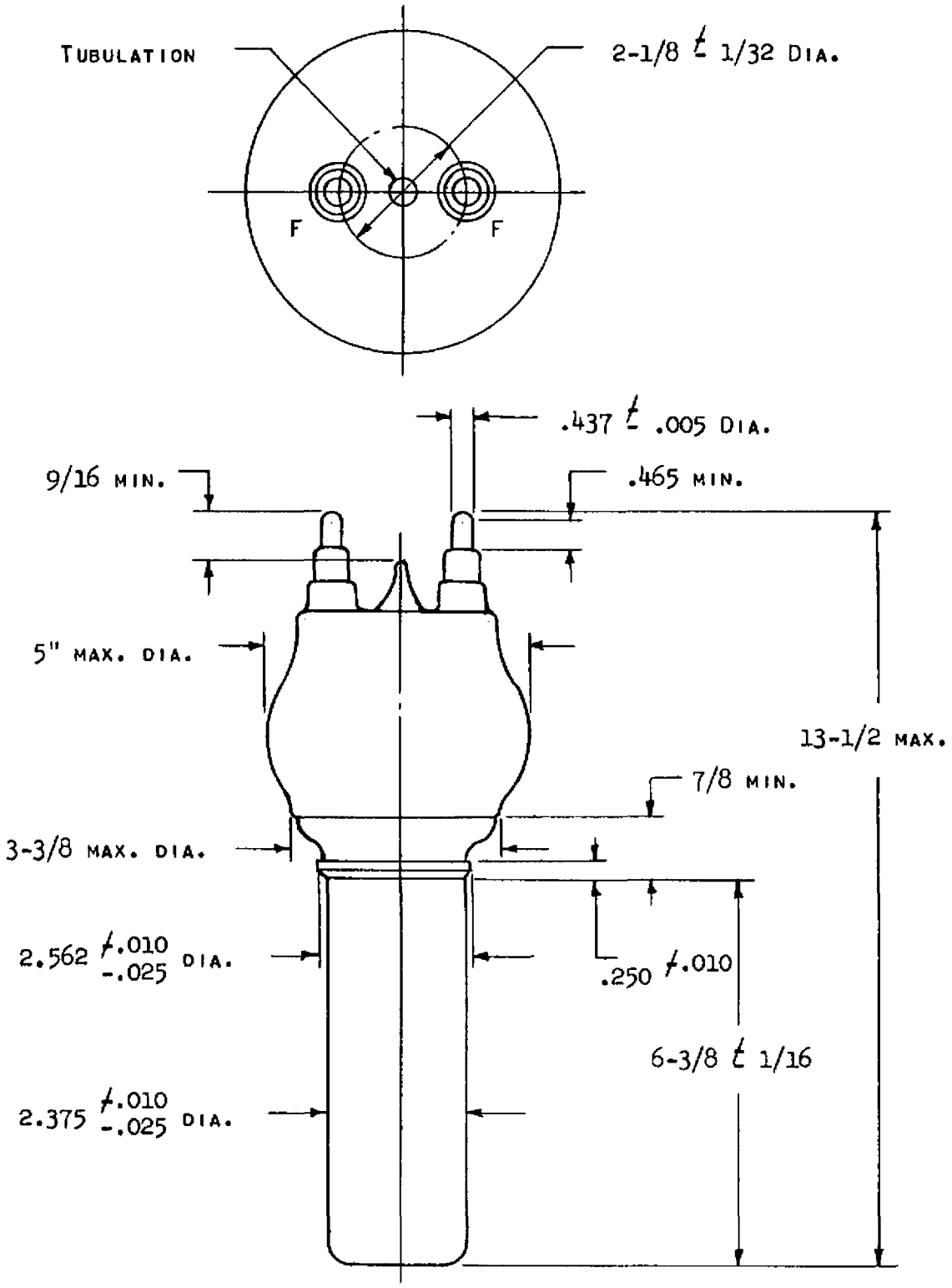

ACCESSORIES:

TERMINAL CONNECTOR	-	RT-52578, 2 REQUIRED
SPANNER WRENCH	-	RT-52843, 2 REQUIRED
WATER JACKET	-	RT-53221 SIZE C
O-RING	-	RT-53836 SIZE B-B

OUTLINE
F-8109 POWER DIODE

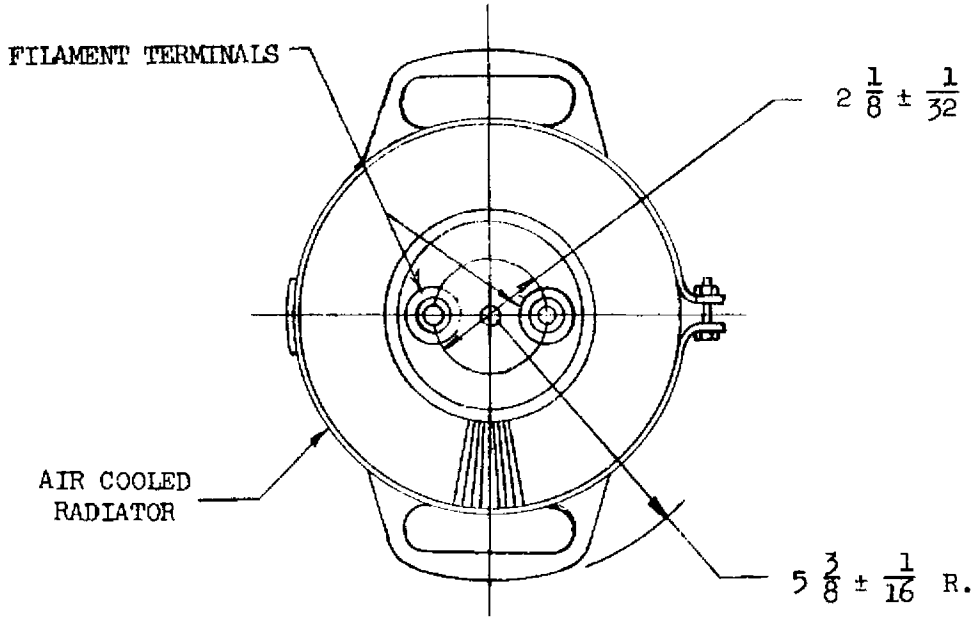

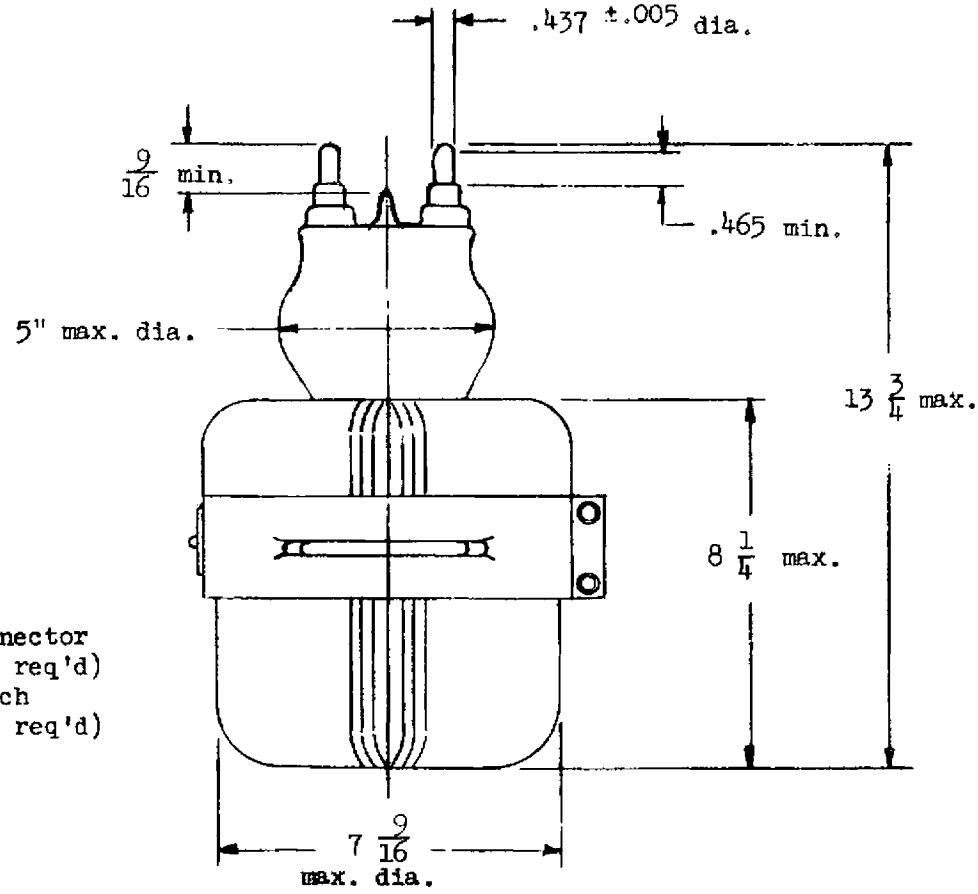

ACCESSORIES

Air Jacket
RT-55240
Terminal Connector
RT-52578 (2 req'd)
Spanner Wrench
RT-52843 (2 req'd)

OUTLINE

F-8110 POWER DIODE