RCA-8072

BEAM POWER TUBE

2.26" Max. Length
1.44" Max. Diameter
Conduction Cooled

For Use in Low-Voltage Mobile Equipment at Frequencies Up to 500 Mc.

Coaxial-Electrode Structure
Ceramic-Metal Seals
Unipotential Cathode

RCA-8072 is a very small, low-cost, conduction-cooled beam power tube designed for use as an rf power amplifier, oscillator, regulator, distributed amplifier, or linear rf power amplifier in mobile or fixed equipment.

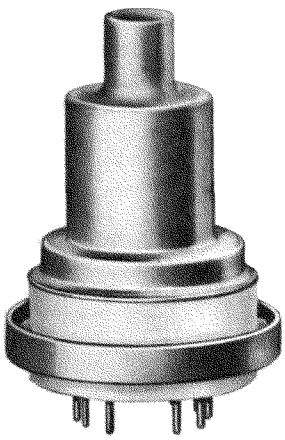

Actual Size

Because of its high power sensitivity and high efficiency, the 8072 can be operated with relatively low plate voltage to give large power output with small driving power. In CW operation with a plate voltage of only 700 volts, the 8072 can provide useful power outputs of 110 watts at 50 Mc, 105 watts at 175 Mc, and 85 watts at 470 Mc.

The heater of this tube may be operated by ac or dc voltage, but it is designed to operate over a voltage range of 12 to 15 volts and will take momentary excursion from 11 to 17 volts in battery operation. The heater design insures dependable performance in mobile equipment under operating conditions encountered during battery charging and discharging. Suitably designed mobile equipment using the 8072 will meet the requirements of EIA Standard RS 152A, Minimum Standards for Land-Mobile Communications FM or PM Transmitters 25-470 Mc.

The 8072 employs a large-area, nickel-plated-copper cylindrical-plate terminal for both high electrical conductivity to the electrical circuit and high thermal conductivity for intimate thermal contact to the conduction-cooling system.

The 8072 features a light-weight, cantilever-supported cylindrical electrode structure within a ceramic-metal envelope. This construction provides a very sturdy tube and permits high-temperature operation.

The terminal arrangement of the 8072 facilitates use of the tube with tank circuits of the coaxial or strip-line type. Effective isolation of the output circuit from the input circuit is provided at the higher frequencies by the low-inductance ring terminal for grid No.2. A base-pin termination for grid No.2 is also available for operation of the 8072 at the lower frequencies.

The tripod arrangement of both the cathode and the grid-No.1 leads not only simplifies construction, but enhances electrical characteristics. The three cathode leads reduce the inductance path to rf ground and reduce the input admittance at high frequencies. One of the cathode leads (preferably No.4 pin) may be series tuned to ground with a capacitor to provide broadband neutralization in the upper frequency range of the tube. The three grid-No.1 leads to separate pins accommodate a split-input circuit for distributed amplifier service.

GENERAL DATA

Electrical:

Heater, for Unipotential Cathode:		
Voltage range (AC or DC)[a]	12.0 to 15.0	volts
Current at 13.5 volts	1.3	amp
Minimum heating time	60	sec
Mu-Factor, Grid No.2 to Grid No.1 for plate volts = 250, grid-No.2 volts = 200, and plate amperes = 1.2	11	
Direct Interelectrode Capacitances:[b]		
Grid No.1 to plate	0.13 max.	pf
Grid No.1 to cathode	16	pf
Plate to cathode	0.011	pf
Grid No.1 to grid No.2	22	pf
Grid No.2 to plate	6.5	pf
Grid No.2 to cathode	2.6	pf
Cathode to heater	3.4	pf

Mechanical:

Operating Position	Any
Maximum Overall Length	2.26"
Seated Length	1.920" ± 0.065"
Greatest Diameter	1.426" ± 0.010"
Base	Large-Wafer Elevenar 11-Pin with Ring E.F. Johnson Co.▲ No.124-311-100, (JEDEC No.E11-81)
Socket	Mycalex* No.CP464-2, or equivalent
Grid-No.2 Bypass Capacitor	E.F. Johnson Co.▲ No.124-113-1, or equivalent
Weight (Approx.)	2 oz

Thermal:

Terminal Temperature (All Terminals)	250 max.	°C
Plate Core Temperature (See *Dimensional Outline*)	250 max.	°C

▲ E.F. Johnson Co., 1921 10th Ave. S.W., Waseka, Minn.
* Mycalex Corp. of America, 725 Clifton Blvd., Clifton, N.J.

Trademark(s) ® Registered
Marca(s) Registrada(s)

8072 9-63
Printed in U.S.A.

Cooling, Conduction:
The plate terminal must be thermally coupled to a constant temperature device (heat sink—solid or liquid) to limit the plate terminal to the specified maximum value of 250° C. The grid No.2, grid No.1, cathode, and heater terminals may also require coupling to the heat sink to limit their respective terminal temperature to the specified maximum value of 250° C.

LINEAR RF POWER AMPLIFIER
Single-Sideband Suppressed-Carrier Service

Peak envelope conditions for a signal having a minimum peak-to-average power ratio of 2

Maximum CCS Ratings, *Absolute-Maximum Values:*

	Up to 500 Mc		
DC PLATE VOLTAGE	2200	max.	volts
DC GRID-No.2 VOLTAGE	400	max.	volts
DC GRID-No.1 VOLTAGE	-100	max.	volts
DC PLATE CURRENT AT PEAK OF ENVELOPE	450[c]	max.	ma
DC GRID-No.1 CURRENT	100	max.	ma
PLATE DISSIPATION	100[d]	max.	watts
GRID No.2 DISSIPATION	8	max.	watts
PEAK HEATER-CATHODE VOLTAGE:			
Heater negative with respect to cathode	150	max.	volts
Heater positive with respect to cathode	150	max.	volts

Typical CCS Operation with "Two-Tone Modulation":

	At 30 Mc	
DC Plate Voltage	700	volts
DC Grid-No.2 Voltage[e]	250	volts
DC Grid-No.1 Voltage[e]	-20	volts
Zero-Signal DC Plate Current	100	ma
Effective RF Load Resistance	1420	ohms
DC Plate Current at Peak of Envelope	205	ma
Average DC Plate Current	150	ma
DC Grid-No.2 Current at Peak of Envelope	16	ma
Average DC Grid-No.2 Current	10	ma
Average DC Grid-No.1 Current	1.0[f]	ma
Peak-Envelope Driver Power Output (Approx.)[g]	0.3	watt
Output-Circuit Efficiency (Approx.)	95	%
Distortion Products Level:[h]		
Third order	30	db
Fifth order	35	db
Useful Power Output (Approx.):		
Average	40[j]	watts
Peak envelope	80[j]	watts

Maximum Circuit Values:

Grid-No.1-Circuit Resistance Under Any Condition:			
With fixed bias	25,000	max.	ohms
With fixed bias (in Class AB_1 operation)	100,000	max.	ohms
With cathode bias	Not recommended		
Grid-No.2 Circuit Impedance	10,000		ohms
Plate Circuit Impedance	See Note k		

PLATE-MODULATED RF POWER AMPLIFIER — Class C Telephony

Carrier conditions per tube for use with a max. modulation factor of 1.0

Maximum CCS Ratings, *Absolute-Maximum Values up to 500 Mc:*

DC PLATE VOLTAGE	1800	max.	volts
DC GRID-No.2 VOLTAGE	400	max.	volts
DC GRID-No.1 VOLTAGE	-100	max.	volts
DC PLATE CURRENT	250	max.	ma
DC GRID-No.1 CURRENT	100	max.	ma
GRID-No.2 INPUT	5	max.	watts
PLATE DISSIPATION	70	max.	watts

Typical CCS Operation:

In grid-drive circuit at 50 Mc

DC Plate Voltage	500	700	volts
DC Grid-No.2 Voltage[n]	150	150	volts
DC Grid-No.1 Voltage[p]	-20	-25	volts
DC Plate Current	200	250	ma
DC Grid-No.2 Current	35	40	ma
DC Grid-No.1 Current	20	35	ma
Driver Power Output (Approx.)[m]	1.2	2	watts
Output Circuit Efficiency (Approx.)	90	90	%
Useful Power Output Approx.)	54	105	watts

Maximum Circuit Values:

Grid-No.1-Circuit Resistance Under Any Condition: With fixed bias	25,000	max.	ohms
Grid-No.2 Circuit Impedance	10,000	max.	ohms
Plate Circuit Impedance	See Note k		

RF POWER AMP. & OSCILLATOR — Class C Telegraphy and RF POWER AMPLIFIER — Class C FM Telephony

Maximum CCS Ratings, *Absolute-Maximum Values:*

	Up to 500 Mc		
DC PLATE VOLTAGE	2200	max.	volts
DC GRID-No.2 VOLTAGE	400	max.	volts
DC GRID-No.1 VOLTAGE	-100	max.	volts
DC PLATE CURRENT	300	max.	ma
DC GRID-No.1 CURRENT	100	max.	ma
GRID-No.2 DISSIPATION	8	max.	watts
PLATE DISSIPATION	100[d]	max.	watts
PEAK HEATER-CATHODE VOLTAGE:			
Heater negative with respect to cathode	150	max.	volts
Heater positive with respect to cathode	150	max.	volts

Typical CCS Operation:

In Grid-Drive Circuit at 50 Mc

DC Plate Voltage	500	700	volts
DC Grid-No.2 Voltage	160	175	volts
DC Grid-No.1 Voltage	-10	-10	volts
DC Plate Current	300	300	ma
DC Grid-No.2 Current	25	25	ma
DC Grid-No.1 Current	50	50	ma
Driver Power Output (Approx.)[m]	1.2	1.2	watts
Useful Power Output	85[j]	110[j]	watts

In Grid-Drive Circuit at 175 Mc

DC Plate Voltage	500	700	volts
DC Grid-No.2 Voltage	200	200	volts

DC Grid-No.1 Voltage	-30	-30	volts
DC Plate Current	300	300	ma
DC Grid-No.2 Current	30	20	ma
DC Grid-No.1 Current	40	40	ma
Driver Power Output (Approx.)[m]	3	3	watts
Useful Power Output	70[j]	105[j]	watts

In Grid-Drive Circuit at 470 Mc

DC Plate Voltage	700	volts
DC Grid-No.2 Voltage	200	volts
DC Grid-No.1 Voltage	-30	volts
DC Plate Current	300	ma
DC Grid-No.2 Current	10	ma
DC Grid-No.1 Current	20	ma
Driver Power Output (Approx.)[m]	5	watts
Useful Power Output	85[j]	watts

For minimum power output, see Test No. 8 under **Characteristics Range Values**

Maximum Circuit Values:

Grid-No.1-Circuit Resistance Under Any Condition:		
With fixed bias	25,000 max.	ohms
Grid-No.2 Circuit Impedance	10,000 max.	ohms
Plate Circuit Impedance	See Note k	

CHARACTERISTICS RANGE VALUES

	Note	Min.	Max.	
1. Heater Current	1	1.15	1.45	amp
2. Direct Interelectrode Capacitances:				
Grid No.1 to plate	2	-	0.13	pf
Grid No.1 to cathode	2	14.3	17.7	pf
Plate to cathode	2	0.0065	0.0155	pf
Grid No.1 to grid No.2	2	19.8	24.2	pf
Grid No.2 to plate	2	5.7	7.1	pf
Grid No.2 to cathode	2	2.0	3.0	pf
Cathode to heater	2	2.5	4.1	pf
3. Grid-No.1 Voltage	1,3	-8	-19	volts
4. Reverse Grid-No.1 Current	1,3	-	-25	μa
5. Grid-No.2 Current	1,3	-7	+6	ma
6. Peak Emission	1,4	13	-	peak amp
7. Interelectrode Leakage Resistance	5	50	-	megohms
8. Useful Power Output	1,6	75	-	watts
9. Cutoff Grid-No.1 Voltage	1,7	-	-44	volts

Note 1: With 13.5 volts ac or dc on heater.

Note 2: Measured with special shield adapter.

Note 3: With dc plate voltage of 700 volts, dc grid-No.2 voltage of 250 volts, and dc grid-No.1 voltage adjusted to give a dc plate current of 185 ma.

Note 4: For conditions with grid No.1, grid No.2, and plate tied together; and pulse voltage source connected between plate and cathode. Pulse duration is 2.0 max. microseconds and duty factor is 0.0002 max. The voltage-pulse amplitude is 200 volts peak. After 1 minute at this value, the current-pulse amplitude will not be less than the value specified.

Note 5: Under conditions with tube at 20° to 30° C for at least 30 minutes without any voltages applied to the tube. The resistance between any two electrodes is measured with a 200-volt Megger-type ohmmeter, or equivalent, having an internal impedance of 1.0 megohm.

Note 6: In a CW grid-driven, conduction-cooled amplifier circuit at 470 Mc and for conditions: dc plate voltage of 700 volts, grid-No.1 voltage of -28 to -32 volts, driven power output of 5 watts, and grid-No.2 voltage varied to obtain a plate current of 300 ma.

Note 7: With dc plate voltage of 2000 volts, dc grid-No.2 voltage of 250 volts, and dc grid-No.1 voltage varied to obtain a plate current of 5 ma.

---

a Because the cathode is subjected to back bombardment as the frequency is increased with resultant increase in temperature, the heater voltage should, for optimum life, be reduced to a value such that at the heater voltage obtained at minimum supply voltage conditions (all other voltages constant) the tube performance just starts to show some degradation; e.g., at 470 Mc, heater volts = 12.5 (Approx.).

b Measured with special shield adapter.

c The maximum rating for a signal having a minimum peak-to-average power ratio less than 2, such as is obtained in "Single-Tone" operation, is 300 ma. During short periods of circuit adjustment under "Single-Tone" conditions, the average plate current may be as high as 450 ma.

d Maximum plate dissipation is limited by the maximum plate core temperature and the cooling system to maintain tube operation below the specified maximum plate core temperature. With simple low-cost cooling techniques, maximum plate dissipation may be only about 100 watts; with more sophisticated cooling techinques, maximum plate dissipation may be as high as 300 watts.

e Obtained preferably from a separate well-regulated source.

f This value represents the approximate grid-No.1 current obtained due to initial electron velocities and contact-potential effects when grid No.1 is driven to zero volts at maximum signal.

g Driver power output represents circuit losses and is the actual power measured at input to grid-No.1 circuit. The actual power required depends on the operating frequency and the circuit used. The tube driving power is approximately zero watts.

h Referenced to either of the two tones, and without the use of feedback to enhance linearity.

j This value of useful power is measured at load of output circuit.

k The tube should see an effective plate supply impedance which limits the peak current through the tube under surge conditions to 15 amperes.

m Driver power output includes circuit losses and is the actual power measured at the input to the grid circuit. It will vary depending upon the frequency of operation and the circuit used.

n Obtained preferably from a separate source modulated along with the plate supply.

p Obtained from grid-No.1 resistor or from a combination of grid-No.1 resistor with either fixed supply or cathode resistor.

DEFINITIONS

CCS — Continuous Commercial Service.

Rating System — The *maximum ratings* in the tabulated data are established in accordance with the following definition of the *Absolute-Maximum Rating System* for rating electron devices:

Absolute-Maximum ratings are limiting values of operating and environmental conditions applicable to any electron device of a specified type as defined by its published data, and should not be exceeded under the worst probable conditions.

The device manufacturer chooses these values to provide acceptable serviceability of the device, taking no responsibility for equipment variations, environment variations, and the effects of changes in operating conditions due to variations in device characteristics.

The equipment manufacturer should design so that initially and throughout life no absolute-maximum value for the intended service is exceeded with any device under the worst probable operating conditions with respect to supply-voltage variation, equipment component variation, equipment control adjustment, load variation, signal variation, environmental conditions, and variations in device characteristics.

Two-Tone Modulation — Two-Tone Modulation operation refers to that class of amplifier service in which the input consists of two monofrequency rf signals having equal peak amplitude.

GENERAL CONSIDERATIONS

Temperature

The maximum terminal temperature of 250° C and the maximum plate core temperature of 250° C are tube ratings and are to be observed in the same manner as other ratings. The temperature may be measured with temperature-sensitive paint, such as Tempilaq. The latter is made by the Tempil Corporation, 132 W.22nd Street, New York 11, N.Y.

Mounting

The 8072 may be mounted by a variety of techniques; however, the frequency of operation and the heat sink to be used will narrow the selection. The base socket, finger-stock grid-No.2 ring (if used), or plate-conduction clamp used in the tube mounting may be fixed. The remaining connector (s) must be adjustable in a plane normal to the major tube axis to compensate for variations in concentricity for the associated parts of the tube.

STRUCTURAL ARRANGEMENT

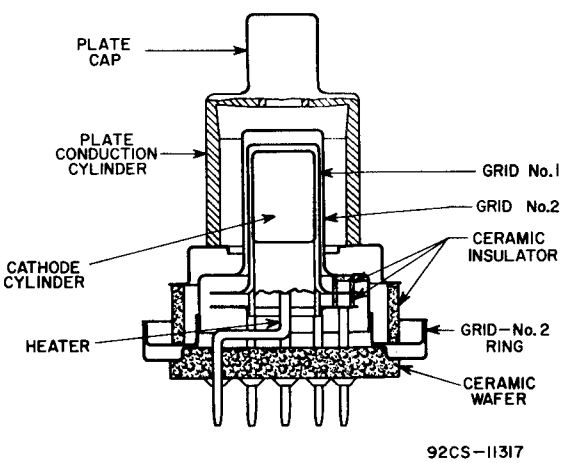

Fig. 1

The plate cap is primarily a protective covering for the exhaust tip-off but may be used as the plate terminal by using a flexible cap connector; it may not be clamped, nor form a portion of the cooling system.

ELECTRICAL CONSIDERATIONS

Grid No.1

Grid No.1 of the 8072 in uhf service is subjected to heating caused not only by the normal electron bombardment as indicated by the grid current, but also by radiation from the cathode circulating rf currents. For these reasons, more than ordinary care must be taken during operation to prevent exceeding the grid-No.1 current rating and the maximum grid-No.1 terminal temperature rating.

Grid No.2

The grid-No.2 current of the 8072 may be negative under certain operating conditions. The voltage for grid No.2 should be obtained from a source of good regulation; if a separate source is used, a maximum impedance of 10,000 ohms and a minimum divider current of 40 milliamperes are required; if a voltage divider from the plate supply is used, a maximum impedance of 10,000 ohms between the grid-No.2 and ground is required. The plate voltage should be applied before or simultaneously with grid-No.2 voltage; otherwise, with voltage on grid-No.2 only, its current may be large enough to cause excessive grid-No.2 dissipation.

The grid-No.2 current is a very sensitive indication of plate-circuit loading. When the 8072 is operated without load, the grid-No.2 current rises excessively, often to a value which damages the tube. Therefore, care should be taken when tuning the 8072 circuit under no-load or lightly loaded conditions to prevent exceeding the grid-No.2 input rating of the tube. In this connection, reduction of the grid-No.2 voltage will be helpful.

Plate

In tubes, such as the 8072, having very closely spaced electrodes, extremely high voltage gradients occur even with moderate tube operating voltages. Any tube flash-arcing may be destructive. It is recommended that each tube see an effective plate supply impedance which limits the peak current through the tube under surge conditions to 15 amperes. Failure of the tubes due to internal flashing is more prevalent when the circuit is not tuned to optimum conditions. Even though laboratory tests indicate that no such protection is needed, poor circuit adjustment in the field may result in shortened tube life.

Driver

The driver power output shown in the typical operation of the 8072 in rf service is considerably more than is normally calculated for typical driving power input in order to permit considerable range of adjustment, and also to provide for losses in the grid-No.1 circuits and the coupling circuits. This consideration is particularly important at the higher frequencies where circuit losses, radiation losses, and transit-time losses increase, and the effects of cathode-lead inductive reactance becomes significant.

Cathode-Drive Circuits

In cathode-drive circuits, driver power output and the developed rf power output act in series to supply the load circuit. If the driving voltage and grid-No.1 current are increased, the output will always increase. Such is not the case in a grid-drive circuit where a saturation effect takes place, i.e., above a certain value of driving voltage and current, the output increases very slowly and may even decrease. It is important to recognize this difference and not to try to saturate a cathode-drive stage because the maximum grid-No.2 input may easily be exceeded.

TYPICAL PLATE CHARACTERISTICS

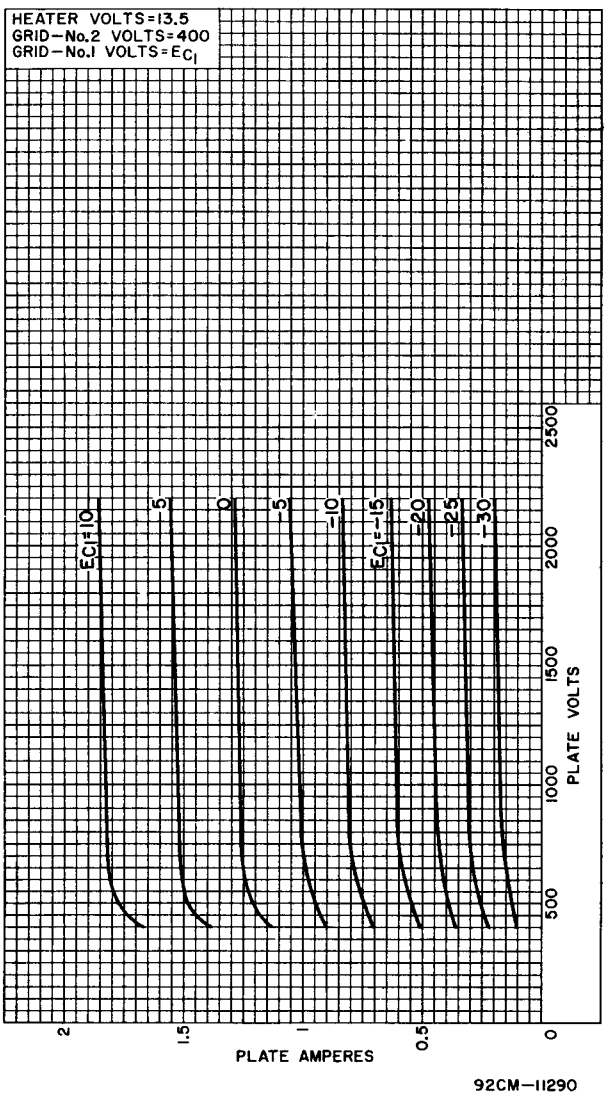

Fig.2

In tuning a cathode-drive rf amplifier, it must be remembered that variations in the load on the output stage will produce corresponding variations in the load on the driving stage. This effect will be noticed by the simultaneous increase in plate currents of both the output and driving stages.

Class C RF Telegraphy Service

In class C rf telegraphy service, the 8072 may be supplied with bias by any convenient method except when the tube is used in the final amplifier or a preceding stage of a transmitter designed for break-in operation and oscillator keying. In this case, an amount of fixed bias must be used to limit the plate current and, therefore, the plate dissipation to a safe value.

Standby Operation

During standby periods in intermittent operation, the heater voltage may be maintained at normal operating value for most applications.

TYPICAL CHARACTERISTICS

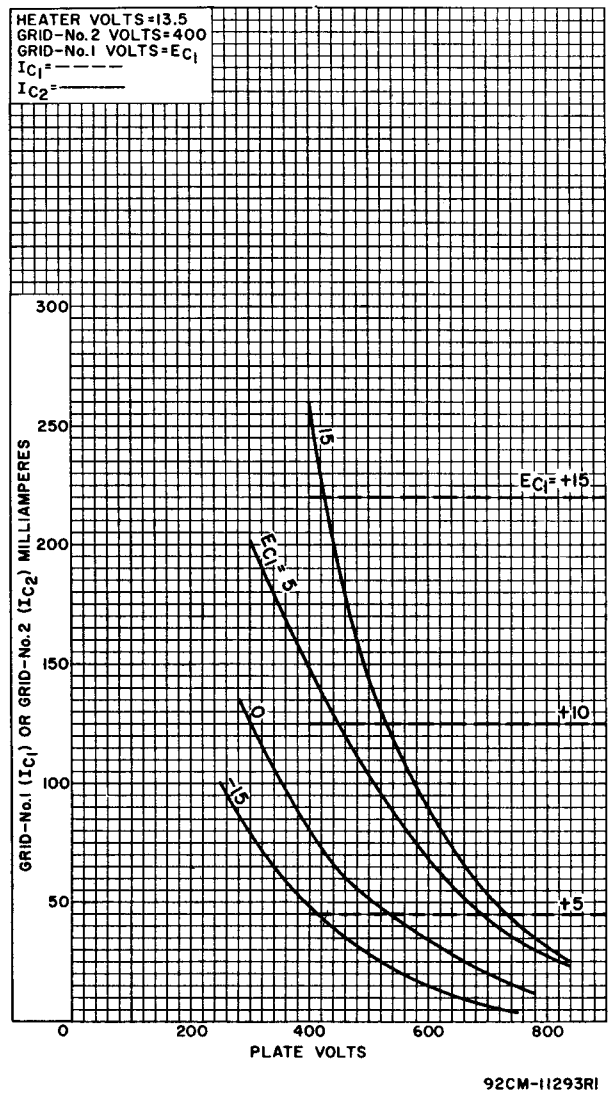

Fig.3

In those applications which require maximum reliability, it is recommended that the heater voltage be maintained at normal operating value when the period is less than 15 minutes; that it be reduced to 80 per cent of normal when the period is between 15 minutes and 2 hours; and that for longer periods, the heater voltage should be turned off.

Protective Devices

Protective devices should be used to protect not only the plate but also grid No.2 against overload. In order to prevent excessive plate-current flow and resultant overheating of the tube, the common ground lead of the plate circuit should be connected in series with the coil of an instantaneous overload relay. This relay should be adjusted to remove the dc plate and grid-No.2 voltage when the average value of plate current reaches a value slightly higher than normal plate current. A protective device in the grid-No.2 supply should remove the grid-No.2 voltage when the dc grid-No.2 current reaches a value slightly higher than normal.

CONSTANT-CURRENT CHARACTERISTICS

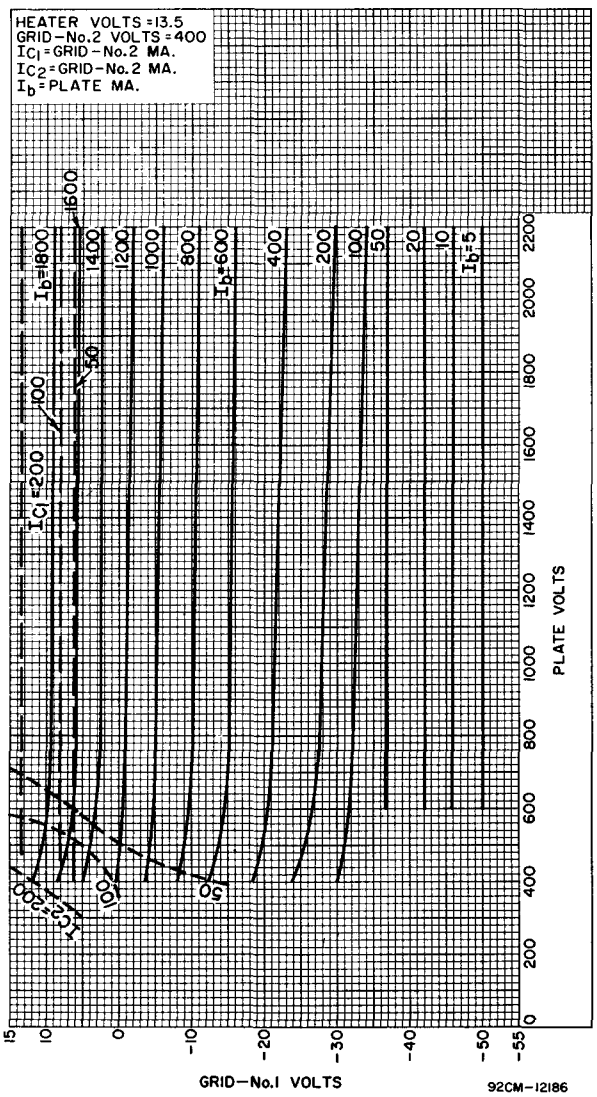

Fig.4

Precautions

The rated plate and grid-No.2 voltages of this tube are extremely dangerous. Great care should be taken during the adjustment of circuits. The tube and its associated apparatus, especially all parts which may be at high potential above ground, should be housed in a protective enclosure. The protective housing should be designed with interlocks so that personnel can not possibly come in contact with any high-potential point in the electrical system. The interlock devices should function to break the primary circuit of the high-voltage supplies when any gate or door on the protective housing is opened, and should prevent the closing of the primary circuit until the door is again locked.

COOLING CONSIDERATIONS

System

The conduction-cooling system consists, in general, of a constant temperature device (heat sink) and suitable heat-flow path (coupling) between the heat sink and tube. Primary consideration of the system should be given to the design of a heat-flow path (coupling device) with high thermal conductivity.

Thermal conductivity is defined as the time rate of transfer of heat by conduction, through unit thickness, across unit area for unit difference of temperature. It is measured in watts per square inch for a thickness of one inch and a difference of temperature of 1° C (See *Table of Conversion Factors for Thermal Conductivity*) as shown in the following equation:

$$K = \frac{W}{A\,\dfrac{(T_2 - T_1)}{L}} \qquad (1)$$

where;

K = thermal conductivity of the material

W = power transfer in watts

A = area measured at right angles to the direction of the flow of heat in square inches

T_1, T_2 = temperature in degrees Centigrade of planes or surfaces under consideration

L = length of heat path in inches through coupling material to produce temperature gradient

For a given system Equation (1) must be integrated to consider changes in area (A) dependent on the coupling configuration and changes in thermal conductivity (k) dependent on various coupling materials and interfaces. Equation (1) may now be reduced to the following:

$$K_s = \frac{W_p}{T_2 - T_1} \qquad (2)$$

where;

K_s = thermal conductance of the system

W_p = maximum permissible plate dissipation in watts

T_2 = temperature in degrees Centigrade at tube terminal

Note: *This value may never exceed the specified maximum rating for terminal temperature.*

T_1 = temperature in degrees Centigrade of heat sink

Heat Sink

The heat sink should be designed to act as a constant-temperature device; that is, to prevent any increase in temperature by dissipating the heat beyond the equipment compartment. Heat sinks can take the form of solids or liquids. In most applications such a heat sink is available in the form of equipment chassis, plate line, or output cavity. Mechanically, the equipment chassis is the most practical heat sink as shown in Reference 1. At uhf frequencies, coaxial elements, tuned lines or cavities become more feasible because of increasing rf losses across supports to equipment chassis.

TYPICAL PLATE CHARACTERISTICS

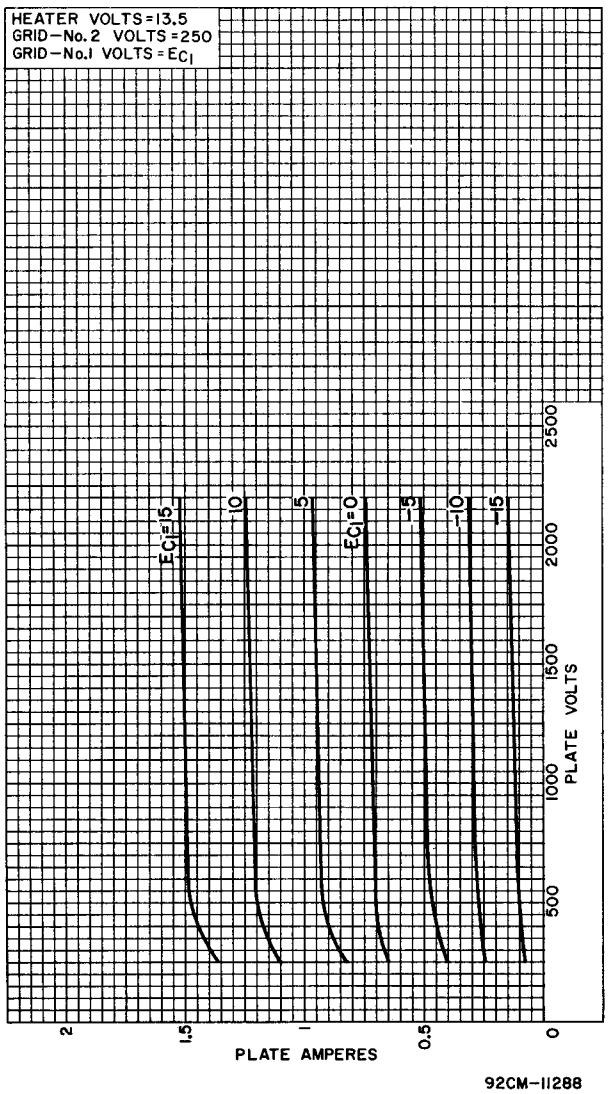

Fig.5

Coupling

There are numerous insulating materials available to serve as the heat-coupling device such as beryllium oxide (beryllia), high-aluminum oxide (high alumina), mica and other insulating bodies. The thermal conductivity of these insulators varies considerably. The choice of insulator will then be dependent primarily on the plate dissipation in the given application. As shown in Fig.6, beryllia has much higher thermal conductivity than its nearest competitor, high alumina.

Beryllia provides the unique properties required for coupling the tube to the heat sink: low electric conductivity (volume resistivity-10^{16} ohm-cm) and high thermal conductivity (2.9 watts/in^2 - ^{o}C at 200° C).

Precaution: Beryllia dust and fumes are highly toxic to mucous membrane and may cause serious ulcers when imbedded under the skin. See References 2,3, and 4.

At low frequencies the inductive element of the plate circuit is usually a relatively long coil which does not provide a good thermal path from anode to chassis. The shunt capacity is large, however, and heat can be conducted through

TYPICAL CHARACTERISTICS

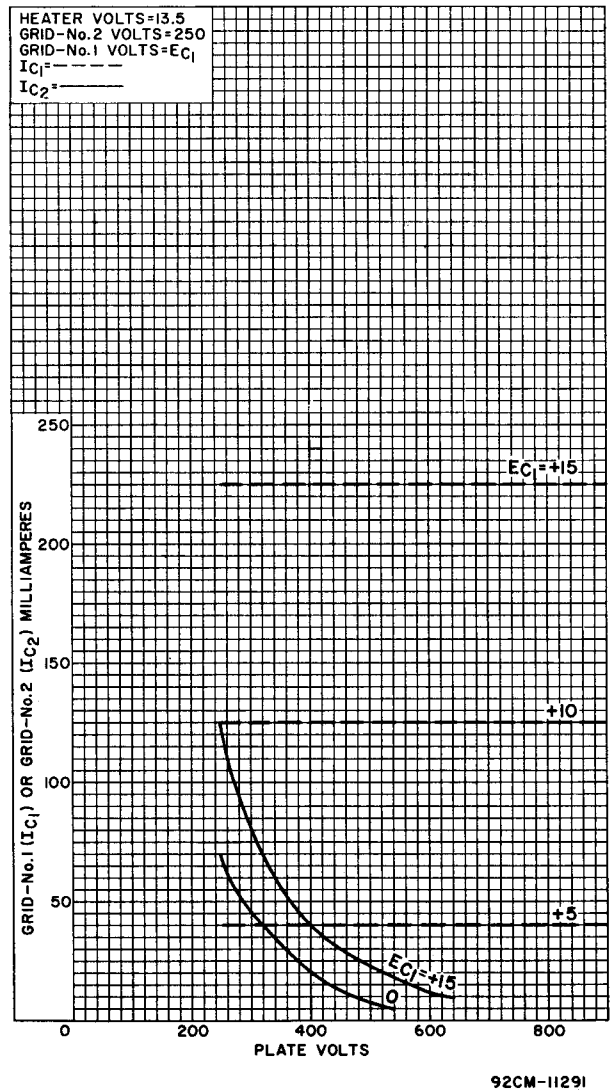

Fig.6

a portion of it to the chassis. At high frequencies the shunt capacity of the plate circuit is limited but the inductive element is short and can be made with sufficient cross-sectional area to form an excellent thermal path.

Conduction Properties of the Tube

The cylindrical plate terminal is nickel-plated copper with high thermal conductivity to conduct the heat of plate dissipation to the surface of the plate terminal. The cooling system for a given application should be designed to dissipate the heat from the tube. The matching coupler to the tube should have a surface to provide intimate thermal contact with the plate terminal. See Reference 7.

It may also be necessary to couple grid No.2, grid No.1, cathode, and heater terminals to the heat sink. In all cases it is necessary to maintain all terminals at a temperature under the maximum temperature of 250° C. *Tube life can be increased by maintaining all terminal temperatures substantially below the maximum temperature rating.*

CONSTANT-CURRENT CHARACTERISTICS

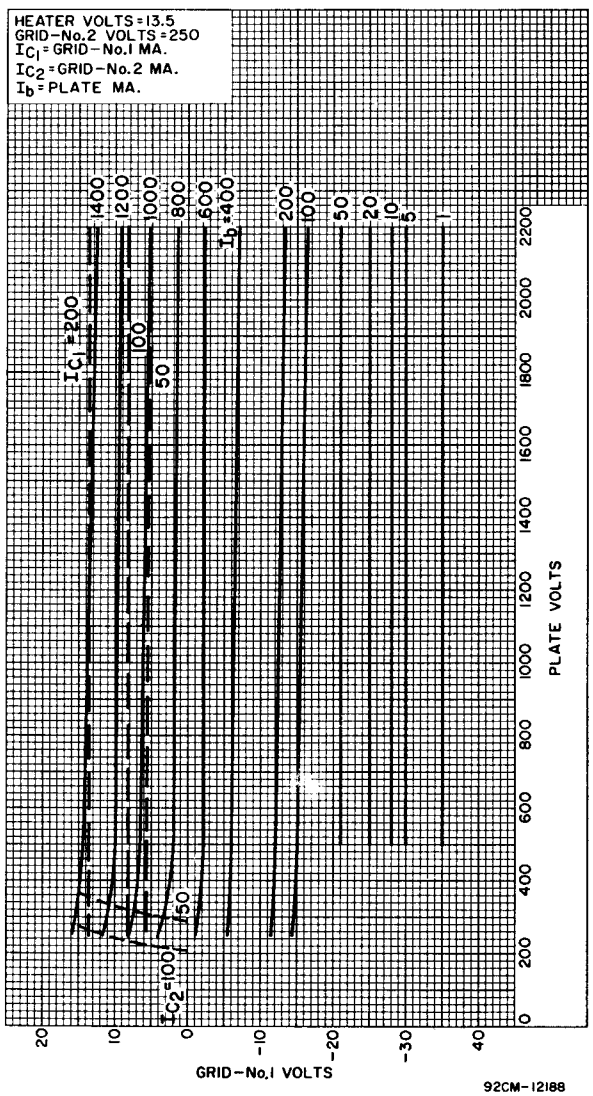

Fig.7

CONSTANT-CURRENT CHARACTERISTICS

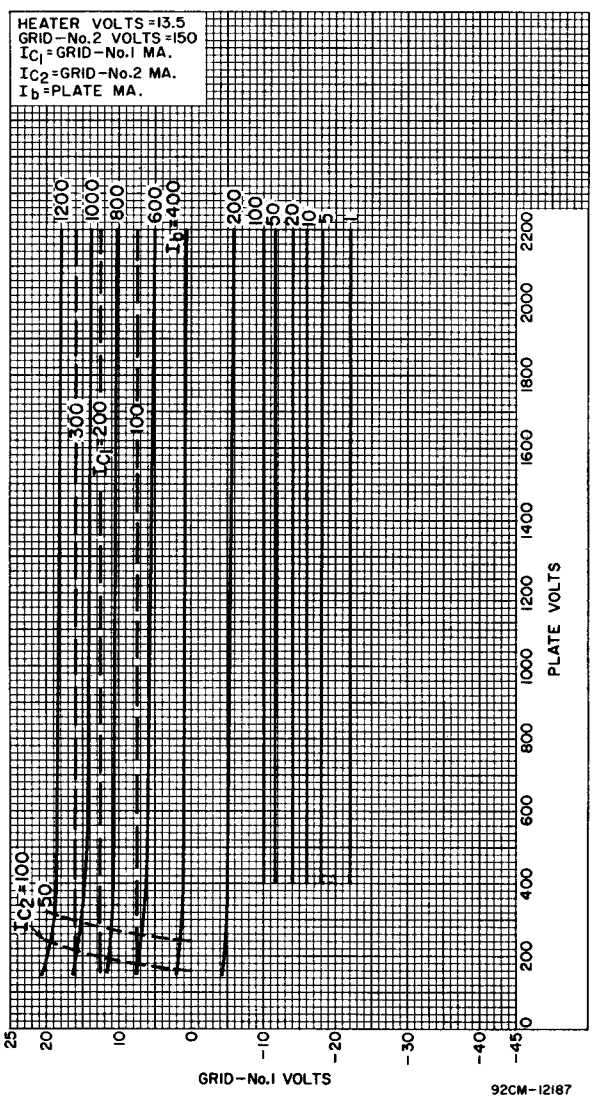

Fig.8

HEAT-TRANSFER CHARACTERISTICS OF VARIOUS MATERIALS

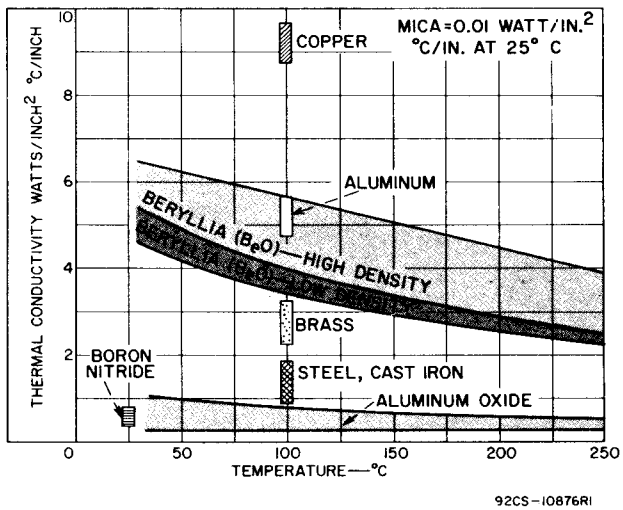

Fig. 9

TYPICAL PLATE CHARACTERISTICS

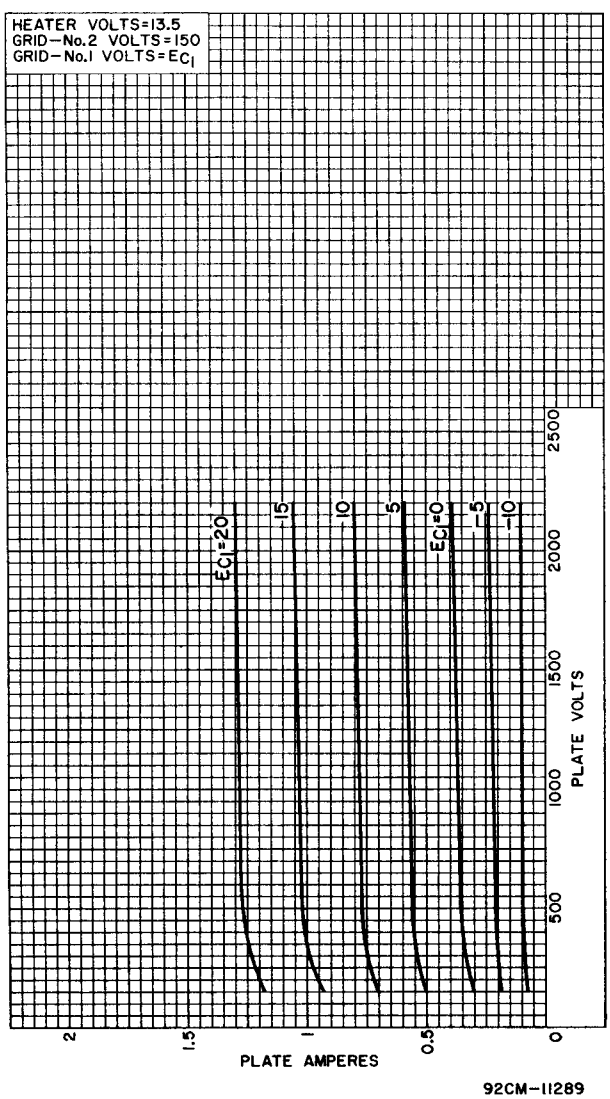

Fig. 10

TYPICAL CHARACTERISTICS

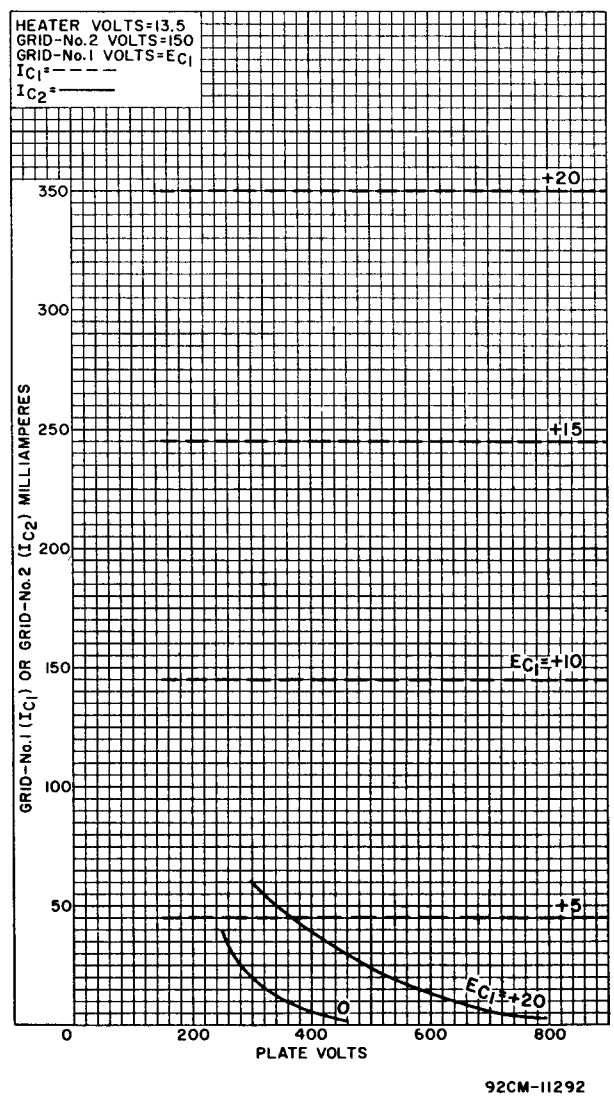

Fig. 11

TABLE OF CONVERSION FACTORS FOR THERMAL CONDUCTIVITY

Multiply	by	To Get
B.T.U./(sq ft)(hr)(°F/ft)	.0440	watts/(sq in)(°C/in)
B.T.U./(sq ft)(hr)(°F/in)	.00367	watts/(sq in)(°C/in)
calories/(sq cm)(sec)(°C/cm)	10.66	watts/(sq in)(°C/in)
watts/(sq cm)(°C/cm)	2.54	watts/(sq in)(°C/in)

REFERENCES

1. J.E. Brosz and R.H. Decker, *"Beryllia Aids Equipment Cooling"*, Electronic Equipment Engineering, Jan. 1960.
2. D.W. White, Jr. and J.E. Burke, *"The Metal Beryllium"* (book), published by the American Society for Metals, Cleveland, Ohio.
3. Donald P. O'Neil, *"Toxic Materials Machined Safely"*, American Machinist, June 4, 1955.
4. Sidney Laskin, Robert A.N. Turner, and Herbert E. Stockinger, *"Analysis of Dust and Fume Hazards in a Beryllium Plant"*, U.S. Atomic Energy Commission, MDDC-1355.
5. James J. Gangler, *"Some Physical Properties of Eight Refractory Oxides and Carbides"*, American Ceramic Society Journal, Vol.33, December 1950.
6. W.D. Kingery, J. Francl, R.L. Coble, and T. Vasilos, *"Thermal Conductivity X -- Data for Several Pure Oxide Materials Corrected to Zero Porosity"*, American Ceramic Society Journal, Vol.37, February 1954.
7. Graff, *"Thermal Conductance Across Metal Joints"*, Machine Design, September 15, 1960.
8. John W. Gaylord, *"Conduction Cooling of Power Tubes in Vehicular Communication Equipment"*, IEEE, PTGVC Transactions, Vol.12, September 1963.

BERYLLIA PRODUCTS MAY BE OBTAINED FROM THE FOLLOWING REPRESENTATIVE LIST OF SUPPLIERS:

National Beryllia Corp.
First & Haskell Aves.
Haskell, N.J.

Brush Beryllium Corp.
5209 Euclid Ave.
Cleveland 3, Ohio

The Beryllium Corp. of America
P.O. Box 1462
Reading, Pennsylvania

Frenchtown Porcelain Co.
Eighth & Harrison Sts.
Frenchtown, New Jersey

Information furnished by RCA is believed to be accurate and reliable. However, no responsibility is assumed by RCA for its use; nor for any infringements of patents or other rights of third parties which may result from its use. No license is granted by implication or otherwise under any patent or patent rights of RCA.

DIMENSIONAL OUTLINE

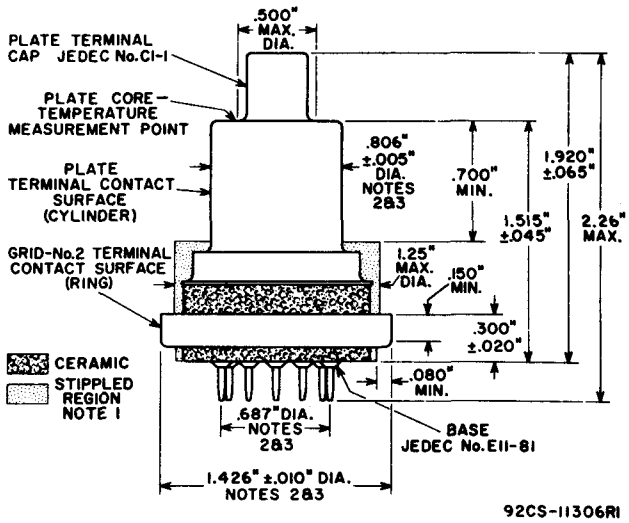

NOTE 1: KEEP ALL STIPPLED REGIONS CLEAR. DO NOT ALLOW CONTACTS OR CIRCUIT COMPONENTS TO PROTRUDE INTO THESE ANNULAR VOLUMES.

NOTE 2: THE DIAMETERS OF THE PLATE TERMINAL CONTACT SURFACE, GRID-No.2 TERMINAL CONTACT SURFACE, AND PIN CIRCLE TO BE CONCENTRIC WITHIN THE FOLLOWING VALUES OF MAXIMUM FULL INDICATOR READING:

Plate Terminal Contact Surface to Grid-No.2 Terminal Contact Surface. 0.030"

Plate Terminal Contact Surface to Pin Circle . . . . . 0.040"

Grid-No.2 Terminal Contact Surface to Pin Circle . . . . . 0.030"

NOTE 3: THE FULL INDICATOR READING IS THE MAXIMUM DEVIATION IN RADIAL POSITION OF A SURFACE WHEN THE TUBE IS COMPLETELY ROTATED ABOUT THE CENTER OF THE REFERENCE SURFACE. IT IS A MEASURE OF THE TOTAL EFFECT OF RUN-OUT AND ELLIPTICITY.

BASING DIAGRAM

Bottom View

Pin 1 - Cathode
Pin 2 - Grid No.2
Pin 3 - Grid No.1
Pin 4 - Cathode
Pin 5 - Heater
Pin 6 - Heater
Pin 7 - Grid No.2
Pin 8 - Grid No.1
Pin 9 - Cathode

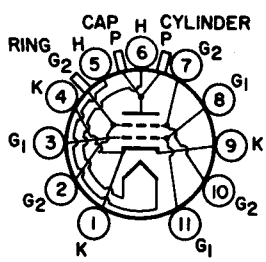

Pin 10 - Grid No.2
Pin 11 - Grid No.1
Cap - Plate Terminal Connection
Cylinder - Plate Terminal Contact Surface (To contact to conduction-cooling system)
Ring - Grid-No.2 Terminal Contact Surface (For use at higher frequencies)

BASE DRAWING
LARGE-WAFER ELEVENAR
11-PIN WITH RING
JEDEC No.E11-81

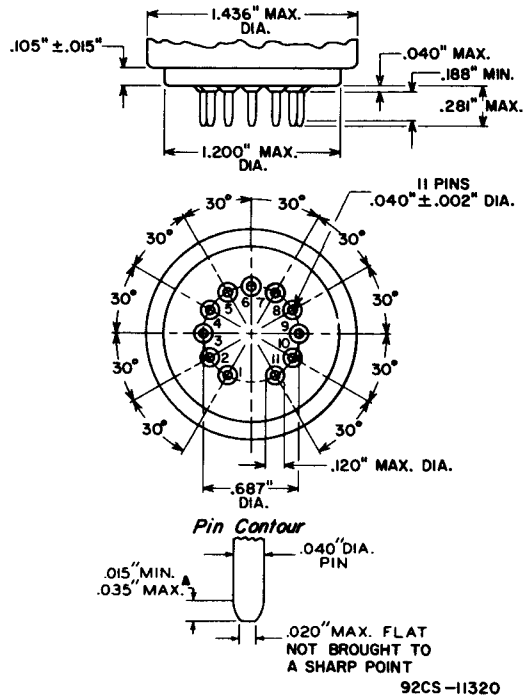

* THIS DIMENSION AROUND THE PERIPHERY OF ANY INDIVIDUAL PIN MAY VARY WITHIN THE LIMITS SHOWN.
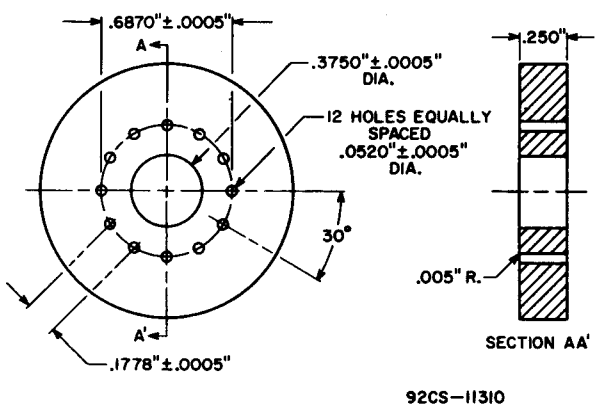
GAUGE DRAWING
JEDEC No.GE11-1