DIRECT VIEW STORAGE TUBE TYPE WL-8067

One Writing Gun
Viewing Gun
Integral Tube and Shield Assembly

4" Display Diameter
5-1/4" Overall Diameter
14-7/8" Overall Length

The WL-8067 is a display storage tube with high writing speed and moderate brightness. It is capable of electrically writing and storing a bright, flicker-free display on a 4 inch diameter fluorescent screen.

The viewing screen requires 10 kilovolts and the brightness exceeds 2000 foot-lamberts with a writing speed of 100,000 inches per second. The WL-8067 has a storage time of 30 seconds which permits storage and display of very high speed transients for liesurely examination. In applications of this type and others having written information of a repetitive character, the ability of the tube to integrate successive weak signals is of great utility.

Longer storage periods may be obtained by pulsing the flood gun. If the pulse rate is high enough, no flicker will be observed. In this manner, storage times up to 30 minutes may be achieved with some loss of brightness. The display would still be clearly legible in a lighted room.

The WL-8067 is suitable for applications such as airborne fire-control and navigational radar, weather radar, airport surveillance, transient studies and visual-display element in narrow-band-width data transmission systems.

The WL-8067 is designed for military use and is therefore capable of meeting appropriate military specifications. The entire tube is potted within a salt spray resistant magnetic shield with a synthetic silicone rubber material. Protection against mechanical shock, vibration, humidity and leakage between bulb terminals is thereby achieved.

One writing gun and a flood gun are mounted in the WL-8067. The writing gun has electrostatic focus and deflection.

OPTICAL:

Phosphor:	
Type	High Visual Efficiency, Aluminized P20
Fluorescence	Yellow-Green
Phosphorescence	Yellow-Green
Persistence	Short
Faceplate	Optical Glass, Ground and Polished Flat

MECHANICAL:

Minimum Useful Viewing Diameter	4"
Maximum Overall Length	14-7/8"
Maximum Seated Length	14-1/4"
Greatest Shield Diameter	5-1/4" ± 1/16"
Viewing Screen Terminal	AMP #832692 – 19
Caps on Large End of Bulb	
Backing Electrode	Recessed Small Ball (JEDEC J1-22)
Collector Electrode	Recessed Small Ball (JEDEC J1-22)
Collimating Electrode	Recessed Small Ball (JEDEC J1-22)
Base	14 Pin Small Diheptal (JEDEC B14-45)
Mounting Position	Any

from JEDEC release #4122, Feb. 4, 1963

ELECTRICAL:

Storage:

Type	Half-Tone or Line
Mode	Control of Transmission
Type of Erasure	Overall

Write Gun:

Cathode				Coated Unipotential
Heater:	Min.	Bogey	Max.	
Voltage (ac or dc)	5.67	6.3	6.93	Volts
Current	0.50	0.60	0.70	Amperes
Focusing Method				Electrostatic
Deflection Method				Electrostatic

Flood Gun:

Cathode				Coated Unipotential
Heater:	Min.	Bogey	Max.	
Voltage	5.67	6.3	6.93	Volts
Current	0.50	0.60	0.70	Ampere
Warm-up Time before Applying High Voltages	30	--	--	Seconds

Focus and Deflection . . . Undeflected, Collimated "Flood" Gun

Direct Interelectrode Capacitances:

External Integral Shield Grounded

Writing Gun Grid 1 to All Internal Elements	8 max.	$\mu\mu f$
Deflection Electrode 1 to All Internal Elements	8 max.	$\mu\mu f$
Deflection Electrode 2 to All Internal Elements	8 max.	$\mu\mu f$
Deflection Electrode 3 to All Internal Elements	8 max.	$\mu\mu f$
Deflection Electrode 4 to All Internal Elements	8 max.	$\mu\mu f$

MAXIMUM RATINGS:

Absolute Maximum Values

Write Gun:

(Reference Voltage is Write Gun Cathode)

Grids 2 & 4 Voltage♦	3000 max.	Volts
With Respect to Flood Gun Cathode	200 max.	Volts
Grid 3 Voltage (Focus)	2000 max.	Volts
Negative with Respect to Flood Gun Cathode	2600 max.	Volts
Grid 1 Voltage:		
Negative Bias Value	200 max.	Volts
Positive Bias Value	0 max.	Volts
Positive Peak Value	2 max.	Volts
Cathode Voltage Negative with Respect to Flood Gun Cathode	2800 max.	Volts
Voltage Between any Deflection Electrode and Grids 2 & 4: ♦		
Positive or Negative Peak Value	500 max.	Volts
Peak Heater-Cathode Voltage:		
Heater Positive or Negative with Respect to Cathode	125 max.	Volts

Flood Gun:

(Reference Voltage is Flood Gun Cathode)

View Screen Voltage	11,000 max.	Volts
Grid 5 Voltage (Backing Electrode)	35 max.	Volts
Grid 4 Voltage (Collector Electrode)	300 max.	Volts
Grid 3 Voltage (Collimating Electrode)	200 max.	Volts
Grid 2 Voltage (Accelerating Electrode)♦	200 max.	Volts
Grid 1 Voltage:		
Negative Bias Value	200 max.	Volts
Positive Bias Value	0 max.	Volts
Peak Heater-Cathode Voltage		
Heater Positive or Negative with Respect to Cathode	125 max.	Volts

LIMITING CIRCUIT VALUES:

View Screen Series Current-Limiting Resistance	1.0	min.	Megohm
Backing Electrode Circuit Resistance	5000	max.	Ohms
Collector Electrode Unbypassed Series Current-Limiting Resistance	22000	min.	Ohms
Grid 1 Circuit Resistance	1.0	max.	Megohm
Resistance in Any Deflecting Electrode Circuit⊕	0.1	max.	Megohm

ENVIRONMENTAL LIMITS:

Atmospheric Pressure	45	max.	P.S.I.
Altitude (Non-pressurized)	60,000	max.	Feet
Temperature:			
Operating	−35 to +71		°C
Non-Operating	−62 to +85		°C
Relative Humidity (Non-Operating)	95		Percent

Vibration . . . . . Sinusoidal Vibration from 5 to 18 cycles per second with a total excursion of 0.30 inches and from 18 to 500 cycles per second with 3 g acceleration will not damage the tube.

TYPICAL OPERATING CONDITIONS AND CHARACTERISTICS

Note: Damage to the tube may occur if the Write-Gun beam is turned on before the Flood-Gun-beam current has reached normal operating value or if the Flood-Gun beam is turned off before the Write-Gun beam.

Reference Point for DC Voltages is Ground

Write Guns:

Grids 2 & 4 Voltage♦	0 to 200	Volts
Grid 3 Voltage (Focus)	−2000 to −2300	Volts
Grid 1 Voltage to Writing Gun Cathode	0 to −70	Volts
Cathode Voltage	−2400	Volts
Grids 2 & 4 Current	100	μampere
Grid 3 Current (per gun)	−10 to 5	μampere
Cathode Current	See Gun Transfer Characteristic	
Deflection Factors		
Deflection Electrodes 1 and 2♦	72 to 88	V dc/in.
Deflection Electrodes 3 and 4♦	72 to 88	V dc/in.
Focused Beam Position †	0.5	Inch

Flood Gun:

	Range	Typical	
View Screen Voltage	8000 to 10,000	10,000	Volts
Grid 5 Voltage (Backing Electrode)	−	2	Volts
Grid 4 Voltage (Collecting Electrode)	150 to 300	250	Volts
Grid 3 Voltage (Collimating Electrode)	5 to 150	80	Volts
Grid 2 Voltage♦	90 to 110	100	Volts
Grid 1 Voltage	0 to −50	0	Volts
Cathode			Grounded
View Screen Current		250	μamperes
Grid 5 Current (Backing Electrode)		2	μamperes
Grid 4 Current (Collector Electrode)		1.5	Ma.
Grid 3 Current (Collimating Electrode)		200	μamperes
Cathode Current		2	Ma.

NOTES

♦ Adjust for astigmatism control.

♦ For other values of cathode to Grids 2 & 4 Voltages, the deflection factor is approximately 32 ± 10% V dc/In./KV of cathode to Grids 2 & 4 Voltage.

† With all deflection electrodes tied to Grids 2 & 4, and erasure at a convenient value the undeflected, focused spots will fall within a circle of 0.5 inch radius, centered on the tube faceplate.

⊕ Approximately equal resistances should be used in each deflection electrode circuit

THE PRIME OPERATION

The tube is said to be primed when the entire surface of the storage dielectric is charged uniformly to flood-gun-cathode potential. The backing electrode/storage grid then has minimum cutoff effect on the flood beam electrons and the entire viewing screen is uniformly illuminated to saturation brightness. If the storage surface is then erased to cutoff by applying a positive pulse train to the backing electrode, the flood beam electrons will just be prevented from passing through to the viewing screen. The surface, then, will be completely free of past history. This is the starting point for all accurate measurements on the tube.

The fastest and most effective method of priming the surface is by momentarily increasing the backing electrode potential by about 200 volts. This can most conveniently be done by switching the backing electrode lead to collector potential, leaving it there one or two seconds then switching it back to its own potential of 10 volts.

One note of caution; because the flood gun beam current reaches a maximum value during the time when the two electrodes are connected together, they should not be allowed to remain so connected for long periods (over 10 or 15 seconds). Leaving the tube in the prime condition for extended periods will result in a loss of light output due to viewing screen damage and in temporary reduction in viewing duration due to evolution of excessive amounts of gas from the viewing screen. Viewing duration can be restored by leaving the tube in the erase mode for 15 or 20 minutes - allowing the getters to absorb the excess gas, but any damage to the viewing screen cannot be repaired.

AVERAGE WRITE GUN ANODE TRANSFER CHARACTERISTIC

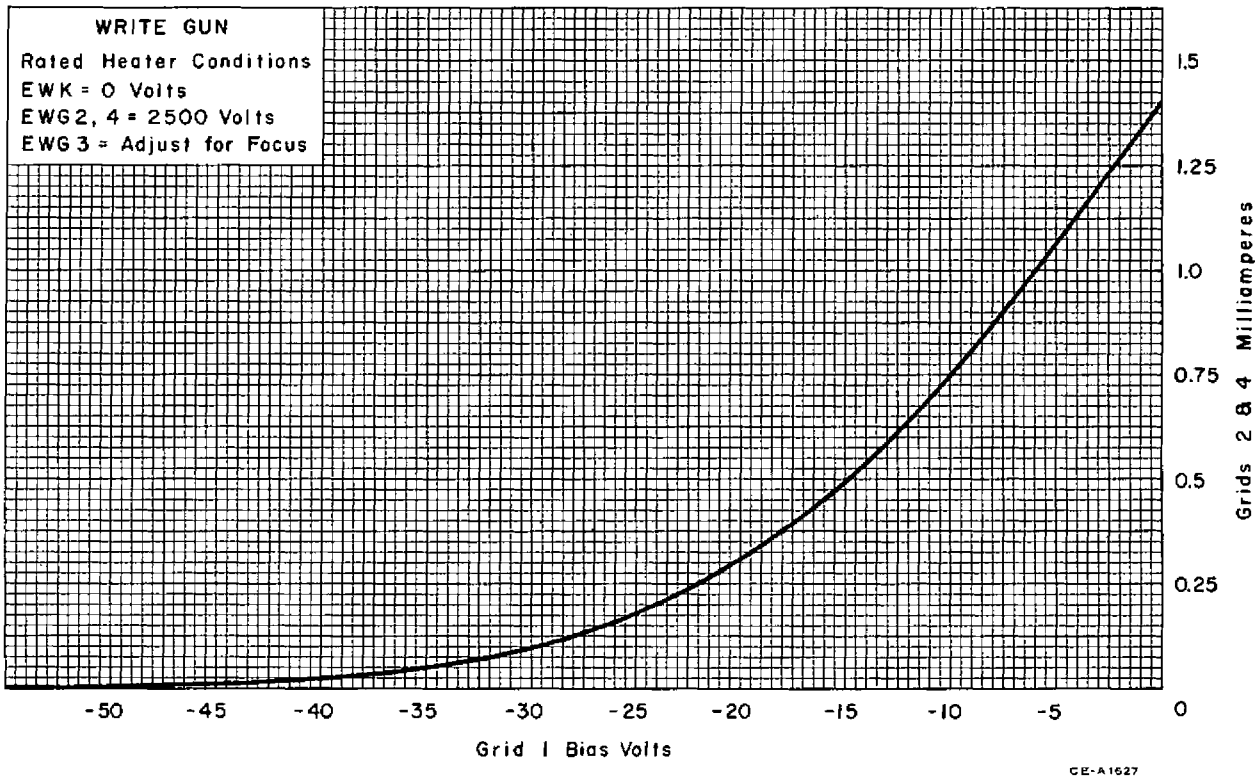

PERFORMANCE DATA

Viewing Time	30	Seconds
Erasing Time (Flood Gun Erasure)	50	Milliseconds
Display Uniformity (Δe_p min.)	2	Volt
Writing Speed	100,000	Inches/Second
Half Tones	4	
Brightness (Screen Voltage = 5 KV)	2000	Ft-Lamberts
Contrast Ratio	10	
Resolution	50	Lines/Inch
Grid Drive	30	Volts

Methods of Measuring Tube Performance

Viewing Time: Viewing duration is the time during which the visual output of a storage tube increases from exactly visual extinction to 10% of saturated brightness without the application of a writing signal or erase pulses. The tube shall be primed and then erased to exactly visual extinction. The erase pulses are removed and the screen allowed to increase in brightness. The time interval required for the brightness level at the center of the screen to increase to 10% of saturated brightness is the viewing duration.

Erasing Time: The storage surface is primed. Erasure is produced by a positive rectangular pulse applied to the backing electrode. The amplitude of this pulse is set to one volt above backing electrode cutoff and the pulse width necessary to erase from saturated brightness to 10% of saturation brightness is the erasing time.

Display Uniformity (Δe_p min.): The difference between the amplitude of an erase pulse required to brighten any area of an unwritten screen, and the amplitude of an erase pulse required to evenly illuminate the screen is described as the display uniformity, (Δe_p min.). The erase pulses used for this measurement are positive rectangular pulses adjusted from 2 to 10 volts peak to peak to produce complete erasure in 50 milliseconds.

Writing Speed (Cathode Current): A raster is applied having frequencies and trace length necessary to produce a scanning speed of 100,000 inches per second. The focus electrode is adjusted for best focus at the center of the raster. The tube is erased to cutoff and a single raster is written by applying a rectangular pulse of adjustable amplitude to Grid 1 of the writing gun. The last step is repeated moving the lines of the raster progressively closer together until the individual lines in the written raster cannot be discerned visually. As the lines approach the merging condition, the control grid pulse amplitude is adjusted to give a written raster of 2000 ft-L. When this brightness is achieved and the lines cannot be discerned visually, the condition of visually limited contrast ratio exists and it is under this condition that the cathode current is measured.

Contrast Ratio: A trace is written to saturation brightness while continuously writing and erasing. Using positive rectangular erase pulses variable from 2 to 10 volts peak-to-peak, the persistence (time required for a written area to be reduced to 10% of saturated brightness) is adjusted to 2 seconds. The ratio of brightnesses in the written and unwritten areas is defined as the contrast ratio. This measurement is made with a maximum ambient brightness of 10 foot-lamberts.

Resolution: A 60 cps sawtooth voltage is applied between deflecting electrodes D_3D_4 and a 2100 to 6300 cps sawtooth voltage is applied between deflecting electrodes D_1 and D_2 giving a raster of approximately 40 lines. Blanking is used to eliminate trace return lines. Trace length shall be adjusted to 3.5 inches. Raster is expanded and number of lines determined. Focus electrode is adjusted for best focus at the center of the raster. Backing electrode is erased to cutoff and G_1, writing gun, is pulsed to write a single raster. Last step is repeated moving the lines progressively closer together until the individual lines in the written raster cannot be discerned visually. As the lines approach the merging condition, the grid pulse amplitude shall be adjusted to give brightness of 1800 ft-L. When the specified brightness is achieved and the lines cannot be discerned visually, the condition for visually limited contrast ratio exists, and the resolution measured at this condition is the limiting resolution.

The resolution in lines per inch is the number of horizontal lines counted when the raster was expanded divided by the height of the compressed raster.

Grid Drive: This is the drive required for writing to 90% of saturated brightness with a writing speed of 100,000 inches per second in 1 scan. Note the writing gun drive characteristic. In the useful region, writing speed is proportional to writing current.

CROSS SECTION VIEW

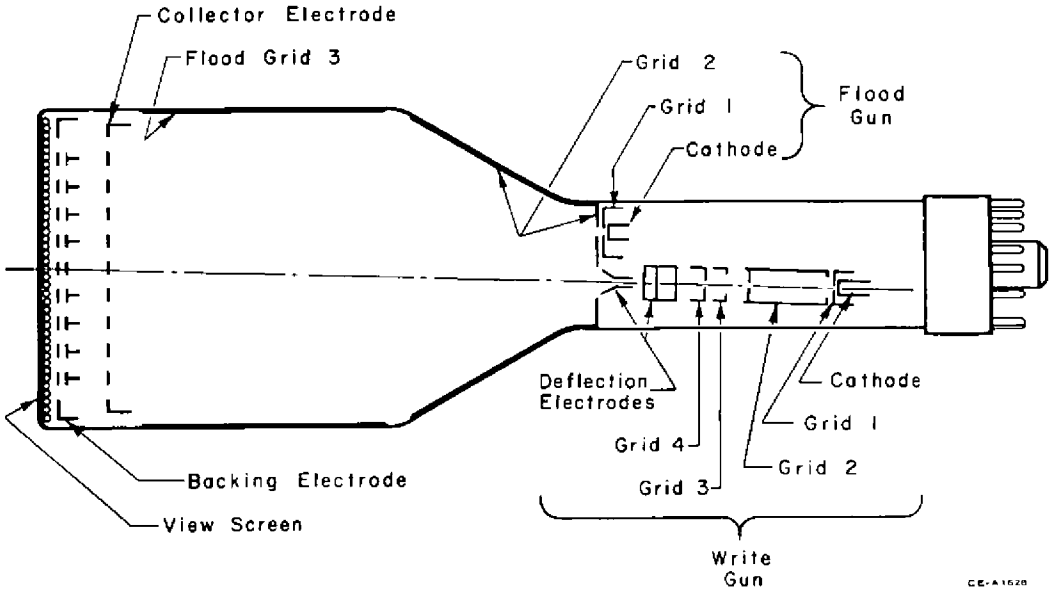

Principles of Operation

The WL-8067 contains, in addition to a phosphor screen and a write gun similar to that of a conventional cathode-ray tube, a storage surface, a secondary-electron collimating system, all of which can be seen in Cross Section View.

The storage surface is a dielectric material deposited on a fine metallic mesh called the backing electrode. Initially this surface is charged to a uniform potential near the flood gun cathode voltage. The write gun scans the storage surface and creates a charge pattern by secondary emission from the dielectric material. Because this dielectric material is an excellent insulator, the charge pattern does not leak away, but remains for a period of time, as long as a week under non-operating conditions. The secondary electrons liberated from the storage surface are attracted to a collecting mesh.

The reading or flood gun does not scan the screen, but produces a wide-angle beam of electrons which "floods" the entire storage mesh and penetrates through its holes to bombard the phosphor screen. The charge pattern written upon the storage surface controls the flood gun beam in a manner similar to the control of plate current by the signal applied to the control grid of a triode. In this way the signals applied to the write gun are converted to patterns on the storage surface, and these produce corresponding patterns on the phosphor screen. The penetration of electrons through the storage mesh is proportional to the charge written upon it, hence, intermediate shades of gray or half-tones may be reproduced. Because of the high current density of the flood beam, the high accelerating potential on the screen, and simultaneous bombardment of all portions of the view screen, the display is extremely bright.

The Viewing Section

The viewing section consists of the following elements: a cathode, control grid, accelerating grid, collimating electrode, collector electrode, backing electrode, and viewing screen.

The cathode is oxide coated and indirectly heated. Grids 1 and 2 are conventional aperture grids and the collimating electrode grid 3 is a conductive coating applied to the bulb wall. The collector electrode is a fine metallic mesh mounted slightly toward the cathode from the backing electrode.

The backing electrode is an extremely fine metallic mesh upon which the dielectric or storage material is deposited. This material is on the cathode side of the mesh as shown in Cross Section View.

The view screen is an aluminized P20 phosphor having short persistence and high visual efficiency. The Spectral Response Curves show that the peak radiation from this phosphor coincides with the peak sensitivity of the human eye.

The Viewing Operation

The flood gun produces a wide angle, low energy, high density electron stream which continuously floods the storage surface. The electrons are highly divergent as they emerge from the aperture of the accelerating grid no. 2, but by proper adjustment of grids no. 2, 3, and 4, the electron stream is collimated to provide uniform, normal flooding of the backing electrode. It is necessary that all of the electrons of the viewing beam approach the storage surface in paths normal to the backing electrode in order that they will have equal energy components in this direction. Only under this operating condition will equal charges at various points on the storage surface have equal control of the flood beam. Thus, collimation is necessary for uniformity of display.

SPECTRAL RESPONSE CHARACTERISTICS

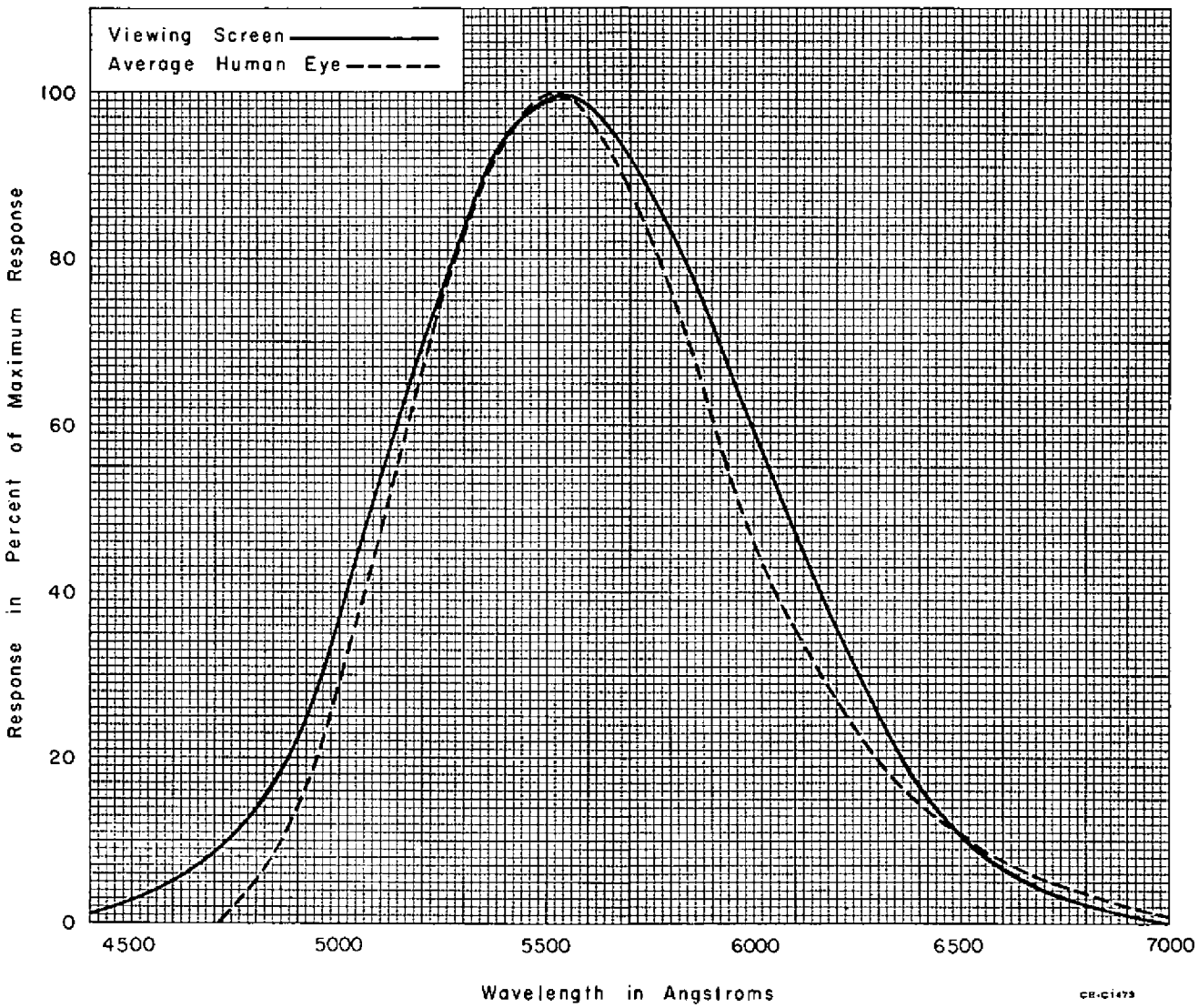

The functions of the collector electrode are several. In addition to its effect upon collimation, it serves to accelerate electrons in the beam; it repels positive ions produced by collisions of electrons with gas molecules in the region between cathode and collector, thus preventing destruction of the stored pattern by ions; it collects secondary electrons produced when the writing beams impinge upon the storage surface; and it collects viewing beam electrons turned back near the storage surface when its potential is negative.

When the flood section voltages are applied, some of the flood beam electrons are intercepted by the collector mesh, and others are decelerated to near zero velocity at the storage grid. Their velocity is so low at this point that fewer secondary electrons are emitted than strike the storage surface. Thus electrons accumulate until the potential is approximately the same as the flood gun cathode, or zero potential.

At this time when the collimated flood beam approaches the storage mesh, electrons cannot land upon the storage mesh, but will either return to the more positive collector electrode or penetrate through the holes of the backing electrode to be accelerated to the phosphor view screen producing a bright display. The brightness of the screen under this condition is designated as "saturated brightness" A condition of equilibrium exists, and the storage surface remains charged to approximately zero potential. It the storage surface is made positive by a write gnn or other means, the surface will be immediately restored to zero potential by the flood gun beam. If, now the backing electrode is suddenly made more positive by several volts, the storage surface will also become positive momentarily because of the very close capacitive coupling between the backing electrode and storage surface, but again the viewing beam will restore the storage surface to zero potential. It next the backing electrode is returned to its original value, the storage surface potential will drop by an equal amount to a negative potential and will retain this charge since viewing beam electrons cannot land. If this negative voltage is great enough, it will cut off the viewing beam electrons preventing them from reaching the phosphor and resulting in a dark screen.

The write gun is used to produce a charge pattern upon the storage surface varying in potential from the storage surface cutoff value to zero potential. Since these potentials are at or below flood gun cathode potential, no flood beam electrons may land upon the storage surface to destroy the written pattern and it will remain until erased or degraded by positive ions produced by collision of electrons in the flood beam with residual traces of gas between the view screen and collector electrode.

Without altering its own form the stored charge pattern in thus able to control the electrons impinging upon the screen, producing a bright stored image with full tone range from visual extinction to saturated brightness.

The Write Gun

The write gun is similar to those found in electrostatically focused and deflected oscilloscope tubes. It is capable of forming a well defined beam having high current-density resulting in excellent resolution and high writing speed.

The gun is shown in Cross Section View and consists of an oxide coated, indirectly heated cathode, a control grid 1, first and second anodes (grids 2 & 4) which are internally connected, a focusing grid 3, and horizontal and vertical deflection plates.

The Writing Operation

The write gun is generally operated with the cathode at −2400 volts with respect to the flood-gun cathode. At this potential the electrons from the write beam have sufficient energy to cause the secondary emission ratio at the storage surface to be greater than unity. Thus, since more electrons are leaving the storage surface than are arriving, the surface assumes a less-negative potential whenever the beam strikes, since the secondaries are attracted to the positive collector electrode it would appear that the write beam could charge the storage surface to collector electrode potential, but in practice the flood beam lands upon the surface whenever it tends to become positive and returns it to approximately flood-gun cathode potential.

The write-beam electrons striking the storage surface can then result in potentials varying from storage-grid-cutoff voltage to approximately zero potential. The storage surface potential is controlled over this range by the amplitude and duration of the write beam current which is determined by the signal applied to the control grid.

As was described previously, the potential at any point on the storage surface determines the number of flood beam electrons passing through the storage mesh holes in that immediate vicinity. When any point is sufficiently positive to allow passage of electrons, they will be accelerated by the high viewing screen potential and strike the phosphor directly opposite that point. The result is a bright spot on the viewing screen having a size only slightly larger than that of the corresponding point where the write gun beam struck the storage surface. The brightness of this spot is directly proportional to the density and velocity of the electrons landing on the element, the density being determined by the elemental charges of the storage surface, and the velocity by the potential of the view screen.

The image brightness may be varied by adjusting the screen potential, but because the screen is aluminized, the light output decreases rapidly below 8000 volts. Operation below this value is not recommended.

The Erasing Operation

A method of preparing the storage surface for the writing operation has already been described under The Viewing Operation. This technique, which involves charging the storage surface to a negative value by the momentary application of a positive potential to the backing electrode, is actually an erasing method known as static erasure.

During the application of the positive potential to the backing electrode, flood-beam electrons land on the storage surface and drive it uniformly to cathode potential thus erasing any stored information.

A disadvantage of this method is that during erasure and subsequent re-writing no information or only incomplete information is displayed. Also the entire screen is illuminated to the saturation brightness level or higher during erasure.

In most applications it is desirable to present a display which gradually decays after a given interval of time. This type of operation may be obtained by applying a continuous series of positive pulses to the backing electrode at a rate sufficiently fast to prevent visible phosphor flicker. The technique of applying a series of pulses to the backing electrode is known as dynamic erasure.

SCREEN BRIGHTNESS AS A FUNCTION OF SCREEN POTENTIAL

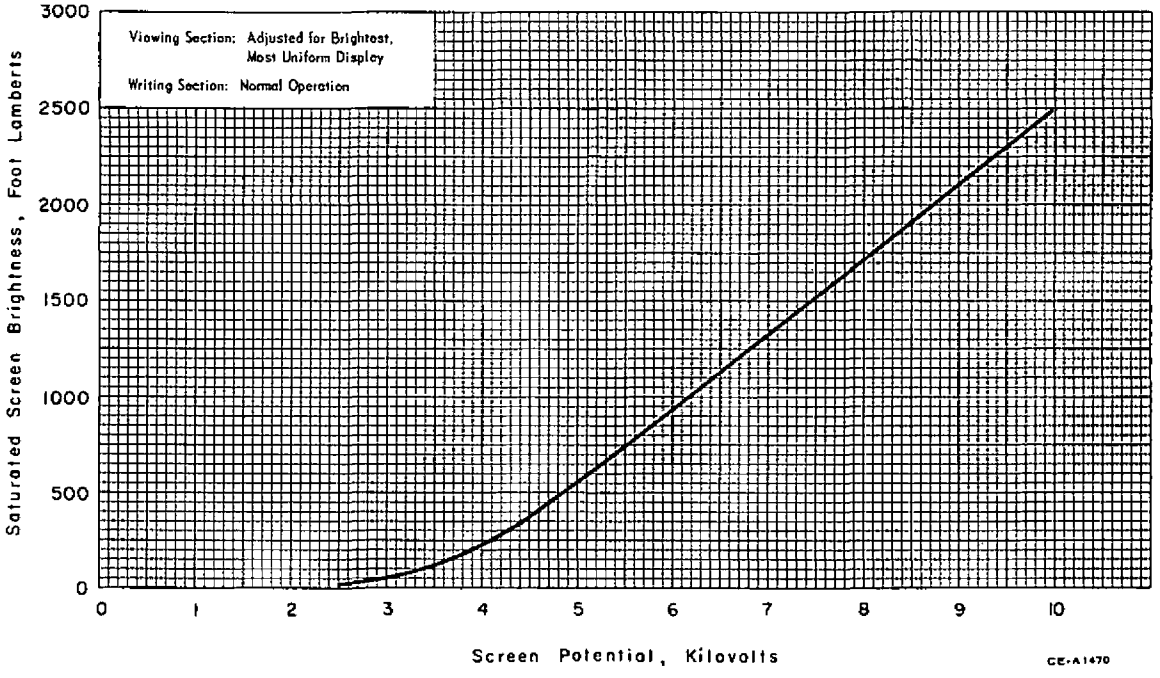

The amount of charge erased during each erase pulse depends upon pulse duration, shape and amplitude. These factors together with erasing-pulse repetition frequency determine the rate at which the observed display decays.

If the erasing pulses are smaller in amplitude than the viewing-beam cutoff voltage, erasure will not be complete, whereas if the pulses are greater than cutoff they will eventually drive the storage surface below cutoff or "blacker than black." Therefore it is not advisable to use erase pulse amplitude as a means of adjusting erasing time.

When a rectangular erasing pulse is used, all portions of the storage surface will simultaneously become positive with respect to the flood-gun cathode and flood-beam electrons will be deposited at nearly the same rate over the entire surface regardless of initial charge. Thus charges representing the brighter elements will remain after other elements have been erased and the brighter areas will be visible for a longer period than the darker areas.

If a positive-going sawtooth erasing pulse is used, the least-negative storage elements will reach cathode potential before the remaining elements, thus allowing flood-beam electrons to land on elements representing brighter areas for a longer period than on those representing darker areas. With this type of proportional erasure, half-tones will persist as long as bright areas.

For applications involving half-tone display, the rectangular erase pulses should be adjusted in amplitude so that the storage surface is charged to exactly cutoff potential by the erasing operation.

For applications such as radar, where noise must be suppressed, a more positive erase pulse may be used to drive the storage surface several volts below cutoff. The write beam must then scan the surface several times to bring the written elements above cutoff.

If possible the erase-pulse amplitude should be adjusted so that the noise component of the writing gun signal is just sufficient to bring the storage surface to cutoff. The signal above this level will then allow flood-beam electrons to produce a display representing that signal without any noise background.

AVERAGE WRITE BEAM TRANSFER CHARACTERISTIC

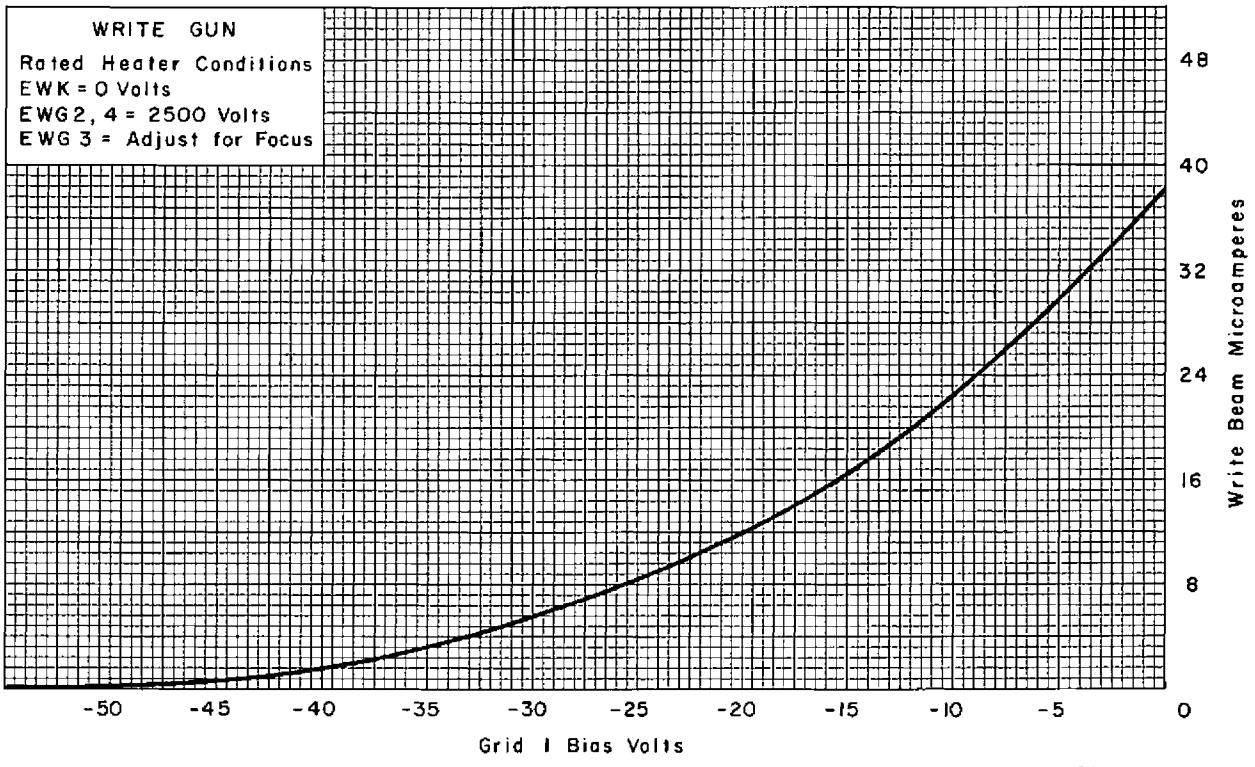

CE-A1529

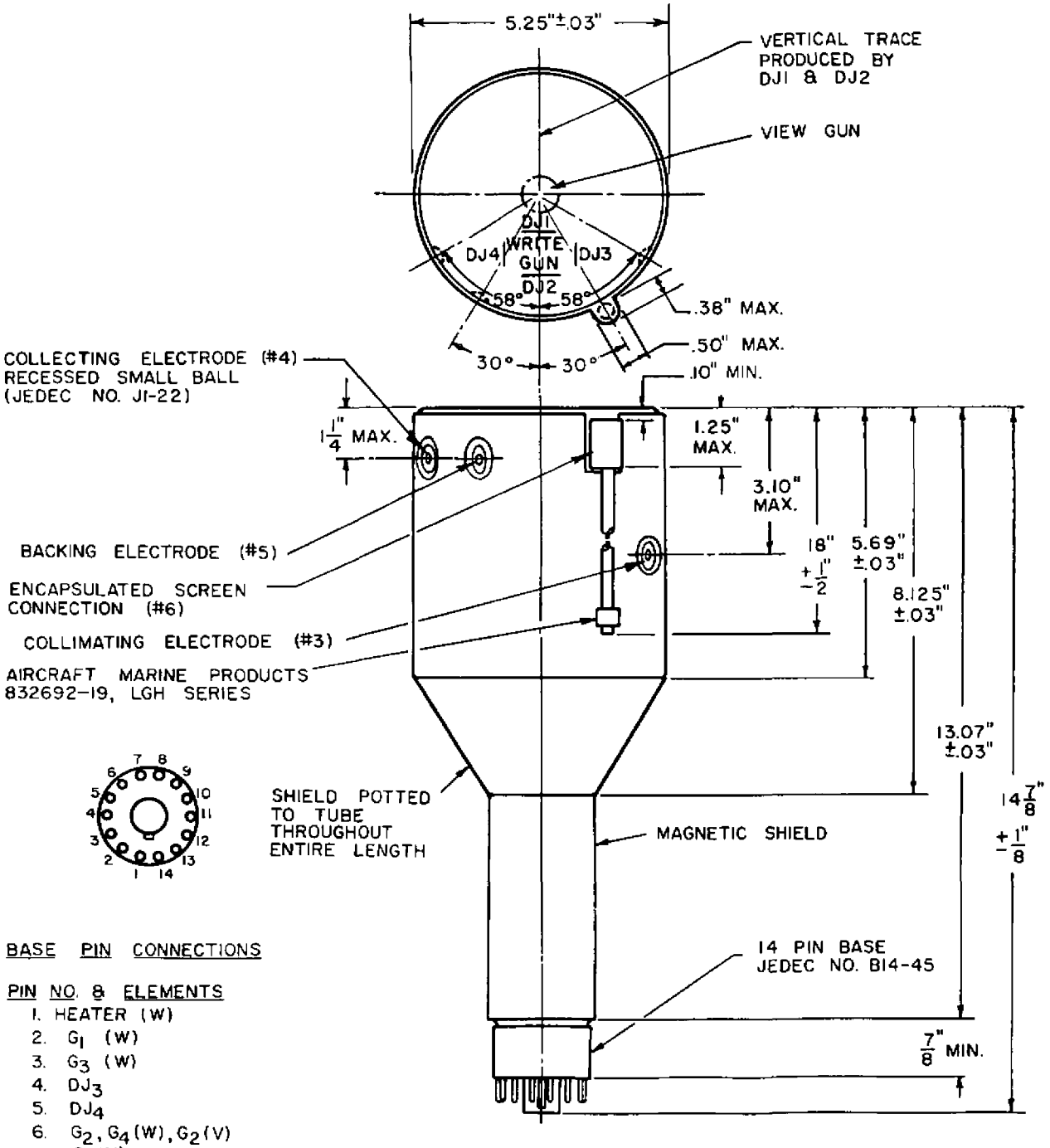

BASE PIN CONNECTIONS

PIN NO. & ELEMENTS

1. HEATER (W)
2. G_1 (W)
3. G_3 (W)
4. DJ_3
5. DJ_4
6. G_2, G_4 (W), G_2 (V)
7. G_1 (V)
8. N. C.
9. HEATER (V)
10. HEATER (V), CATHODE (V)
11. DJ_1
12. DJ_2
13. CATHODE (W)
14. HEATER (W)

(W) = WRITE

(V) = VIEW

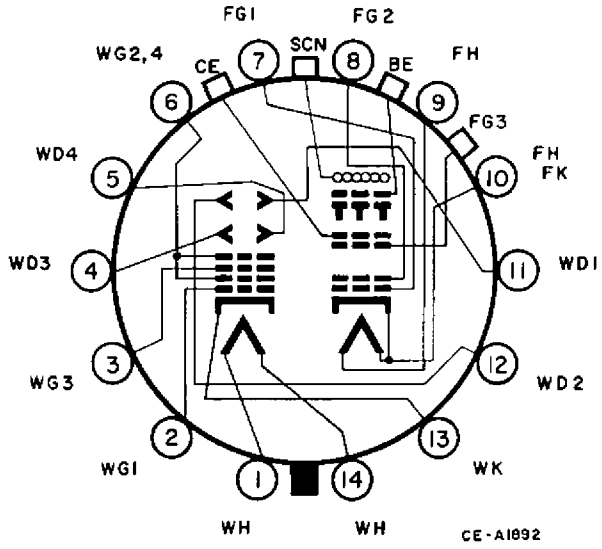

INDEX OF TERMINALS

BASE PINS

Pin No.	Gun	Element
1	Write	Heater
2	Write	Grid 1
3	Write	Grid 3 (Focus)
4	Write	Deflection Electrode 3
5	Write	Deflection Electrode 4
6	Write	Grids 2 & 4
7	Flood	Grid 1
8	Flood	Grid 2
9	Flood	Heater
10	Flood	Heater & Cathode
11	Write	Deflection Electrode 1
12	Write	Deflection Electrode 2
13	Write	Cathode
14	Write	Heater

CAPS ON LARGE END OF BULB

Gun	Element
Flood	Grid 3 (Collimating Electrode)
Flood	Collecting Electrode
Flood	Backing Electrode
Flood	View Screen

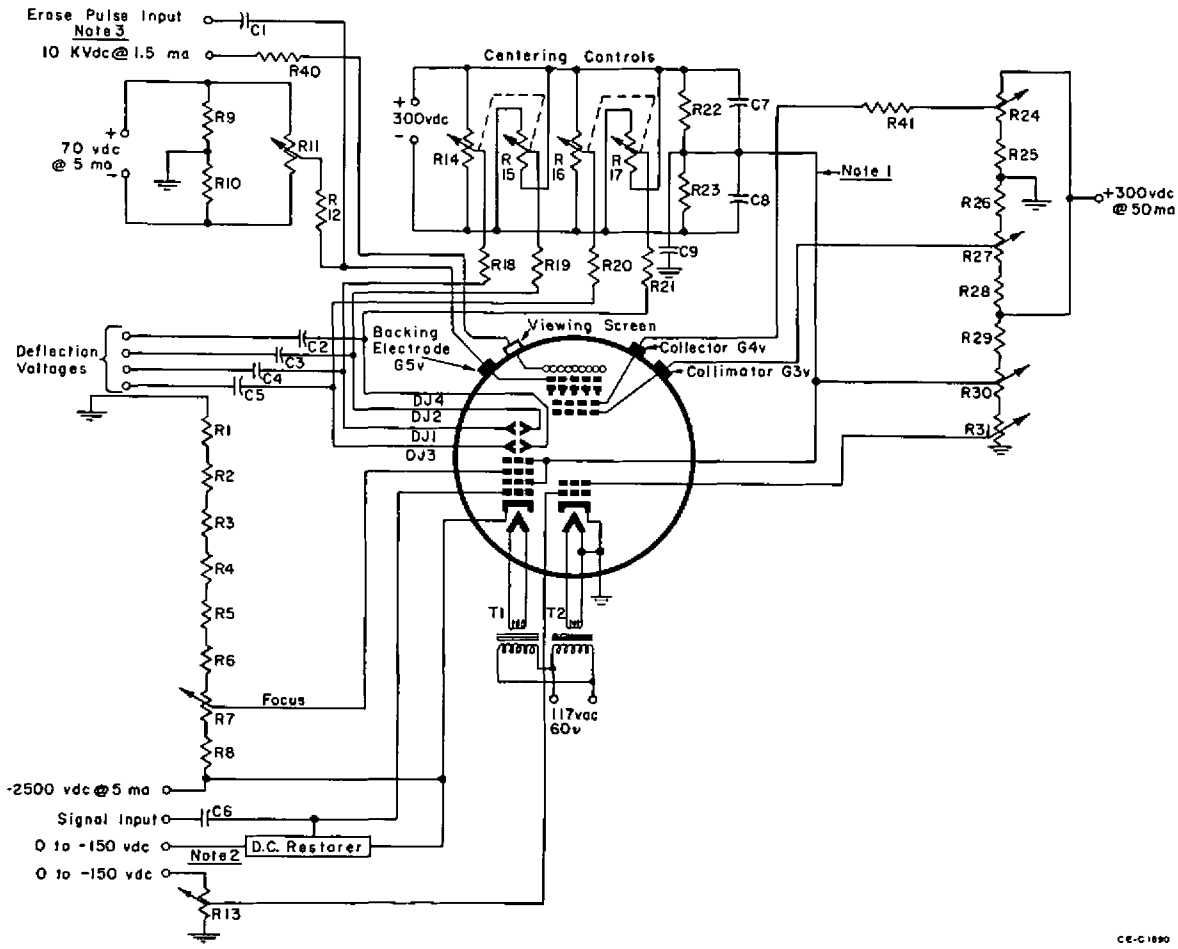

Note 1: The mean deflection potential is referred to the writing gun final anode potential to prevent astigmatism.
Note 2: Voltages are with respect to writing gun cathode. Entire supply must be insulated from ground for 4000 volts.
Note 3: Erase Pulse Characteristics, Amplitude: 0 to 10 volts peak-to-peak, Width: 2 to 10 microseconds, Frequency: 0 to 1000 pulses per second.

C_1: 0.1 μf, 200 volts
C_2, C_3, C_4, C_5: Value depends on deflection-voltage frequency and waveform
C_6: Value depends on signal-voltage frequency and waveform, 4000 volts
C_7, C_8: 0.05 μf, 600 volts
C_9: 0.5 μf, 600 volts
R_1: 91,000 ohms, 1 watt
R_2, R_{25}, R_{29}: 100,000 ohms, 1 watt
R_3, R_4, R_5, R_6: 470,000 ohms, 2 watts
R_7: Write Gun Focus Control: 250,000-ohm potentiometer, 2 watts
R_8: 180,000 ohm, 1 watt
R_9, R_{10}, R_{22}, R_{23}: 1 megohm, 0.5 watt
R_{11}: Backing Electrode Control: 100,000-ohm potentiometer, 2 watts
R_{12}: 5,000 ohm, 1 watt
R_{13}: Flood Gun Grid 1 Control: 250,000-ohm potentiometer 2 watts
R_{14}, R_{15}: Write Gun D_1 & D_2 Centering Controls: Dual 1 megohm potentiometers, 2 watts
R_{16}, R_{17}: Write Gun D_3 & D_4 Centering Controls: Dual 1 megohm potentiometers, 2 watts
R_{18}, R_{19}, R_{20}, R_{21}: 100,000 ohm, 0.5 watt
R_{24}: Collector Electrode Control: 200,000-ohm potentiometer, 2 watts
R_{26}, R_{28}: 51,000 ohm 1 watt
R_{27}: Collimating Electrode Control: 200,000-ohm potentiometer, 2 watts
R_{30}: Accelerating Anode Control: 150,000 ohm potentiometer, 2 watts
R_{31}: Flood-Gun Grid 2 Control: 50,000 ohm, 1 watt potentiometer
R_{40}: 1 megohm, 5 watts
R_{41}: 22,000 ohm, 1 watt
T_1: Filament Transformer: Primary 117 volts, Secondary 6.3 volts @ 1 ampere, Insulated for 4000 volts
T_2: Filament Transformer: Primary 117 volts, Secondary 6.3 volts @ 1 ampere

The information contained herein is furnished without assuming any obligations. The description and illustration of circuits herein does not convey to the purchaser of tubes any license for circuits under the patent claims of Westinghouse Electric Corporation or others.