HARD TUBE PULSE MODULATOR TYPE 8044

The 8044 is a three electrode tube designed for service as a hard tube modulator. The forced air cooled anode is capable of dissipating 20 kilowatts. The cathode is a single phase thoriated tungsten filament.

ELECTRICAL:

Cathode	Thoriated Tungsten Filament	
Filament:		
Voltage (d-c single phase a-c)	8	Volts
Current	185	Amperes
Heating Time (minimum)	15	Seconds
Amplification Factor	20	
Direct Interelectrode Capacitances:		
Grid to Plate	79	$\mu\mu f$
Grid to Filament	71	$\mu\mu f$
Plate to Filament	4	$\mu\mu f$

MECHANICAL:

Mounting Position	Vertical, Anode Down		
Type of Cooling	Forced Air		
Required Air Flow Through Radiator:			
Plate Dissipation	10	20	Kilowatts
Air Flow	800	1700	CFM
Static Back Pressure (Max.)	2.0	4.5	In. H_2O
Maximum Bulb Temperature	180 °C		
Net Weight	72 Pounds		

MAXIMUM RATINGS:

Absolute Maximum Values

DC Plate Voltage	30	max.	Kilovolts
DC Grid Voltage	−2500	max.	Volts
Peak Positive Grid Voltage	2000	max.	Volts
Peak Pulse Plate Current	80	max.	Amperes
Peak Pulse Grid Current	25	max.	Amperes
Plate Dissipation	20	max.	Kilowatts
Grid Dissipation	800	max.	Watts
Pulse Length	1000	max.	Microseconds
Duty Factor	0.02	max.	
Peak Pulse Cathode Current (Note 1)	105	max.	Amperes

1. Peak pulse cathode current of 200 amperes is allowable on pulses of 10 microseconds or less duration if filament is elevated to 10.0 volts.

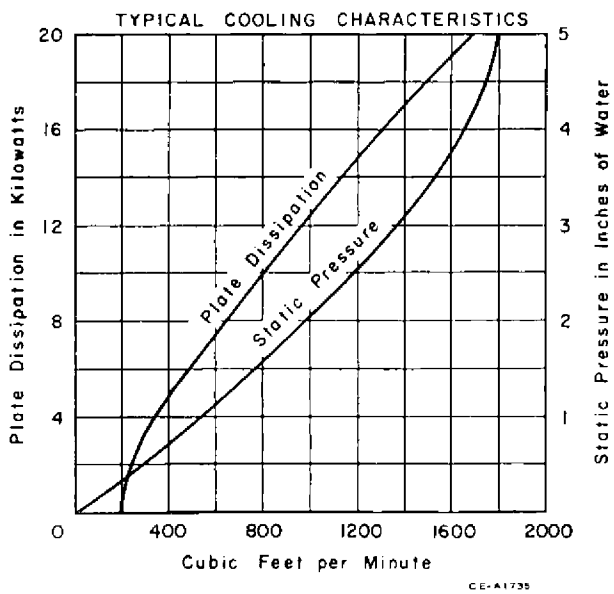

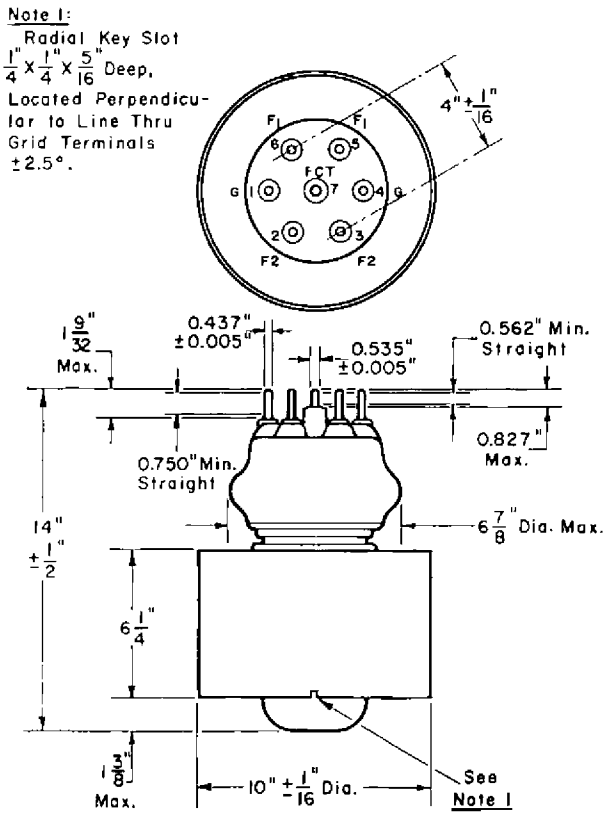

from JEDEC release #3342, July 17, 1961

AVERAGE CONSTANT-CURRENT CHARACTERISTICS

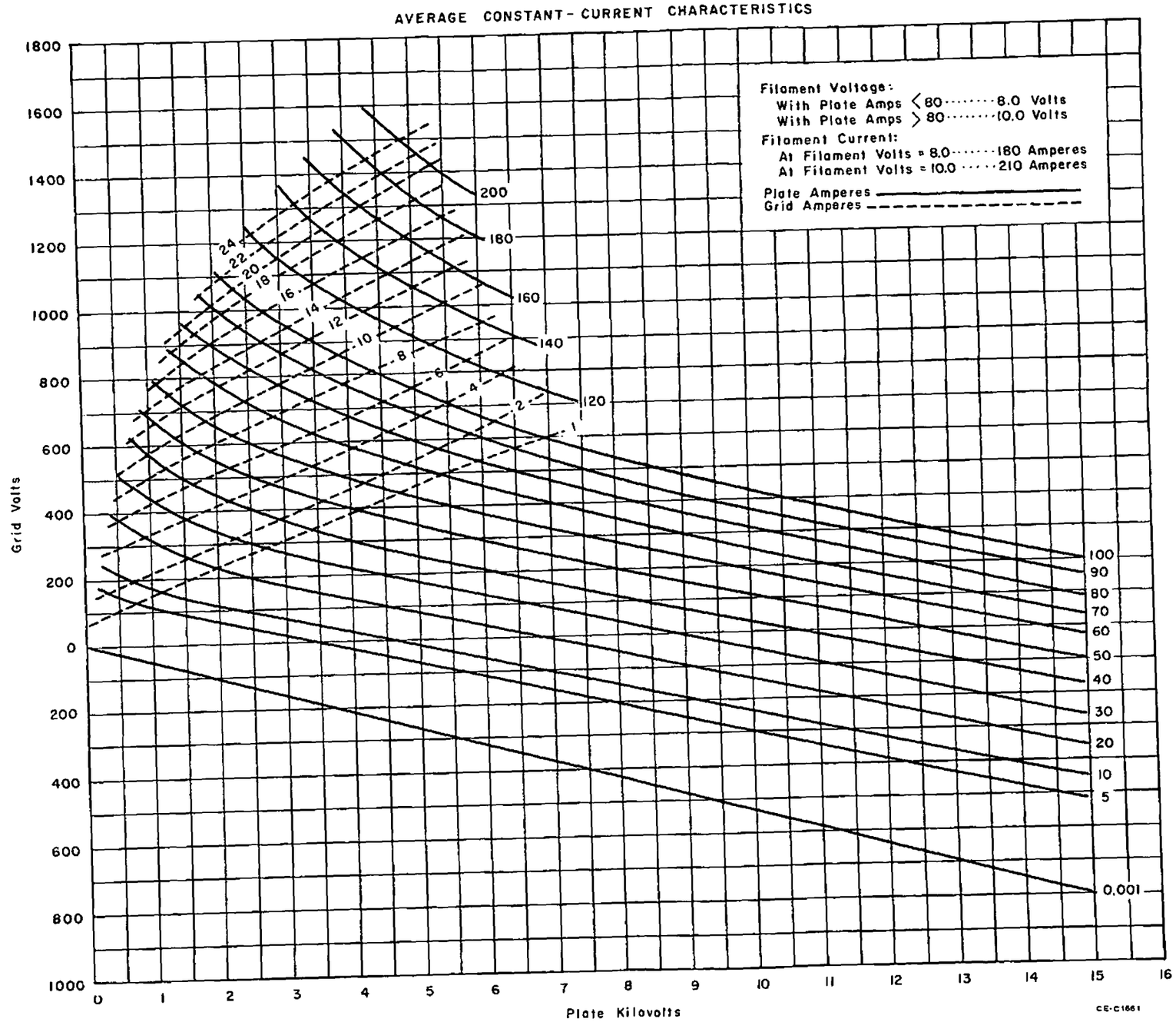

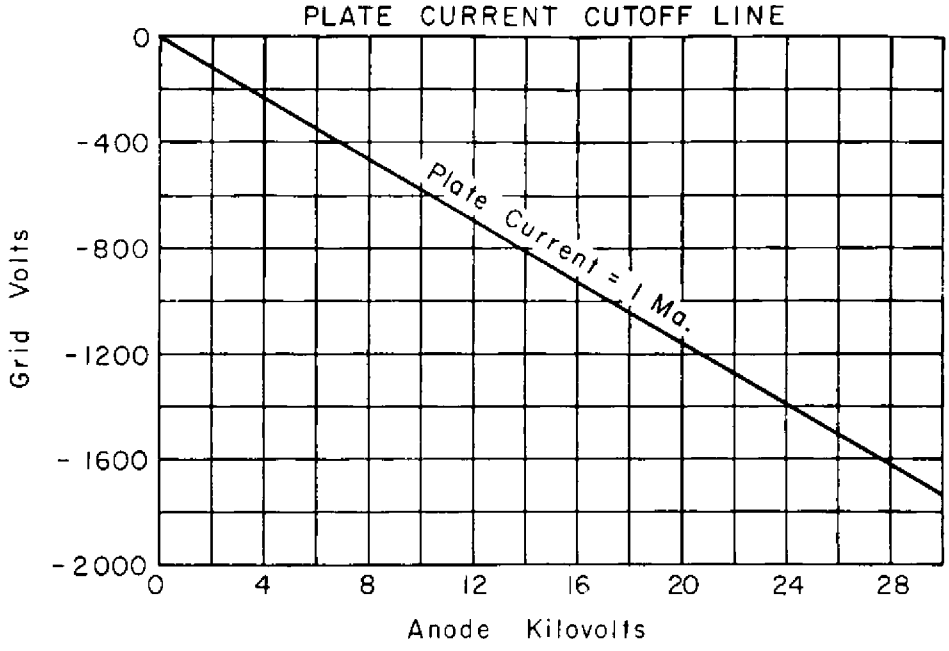

CE-A1675

The information contained herein is supplied without assuming responsibility for infringement of patents or other rights of third parties which may result from its use. No license is granted by implication or otherwise under any patent or patent rights of Westinghouse Electric Corporation.