engineering TUBE DATA

F-8033 ♀
POWER TRIODE

from JEDEC release #4005,
Dec. 3, 1962

ITT Components Division

DESCRIPTION

The F-8033 is a three-electrode tube designed for use as a radio frequency amplifier, oscillator, or Class B modulator. The anode is water-cooled, capable of dissipating 225 kilowatts. The cathode is a thoriated tungsten filament. Maximum ratings apply up to 24 megacycles.

ELECTRICAL

Filament Voltage	15.5	volts
Filament Current	420	amperes
Filament Starting Current	1000	max. amperes
Filament Cold Resistance	.0045	ohms
Minimum Heating Time	3	minutes
Amplification Factor		
E_c = -200 volts; I_b = 5 amperes	16	
Inter-Electrode Capacitances		
Grid-Plate	110	μμf
Grid-Filament	140	μμf
Plate-Filament	6	μμf

MECHANICAL

Mounting Position	Vertical, anode down	
Type of Cooling	Water and Forced Air	
Maximum Outgoing Water Temperature	70	°C
Water Flow	40	gpm
Specified water flow must start upon application of any voltages and may be removed simultaneously with filament and plate power.		
Air Flow		
To Air Manifold++	300	cfm, min.
To Filament Seals	40	cfm, min.
Cooling air to start with the application of any voltages and may be removed simultaneously with filament and plate power.		
Maximum Glass and Seal Temperature	180	°C
Net Weight	65	lbs., approx.

♀ Formerly our D-1037.

++ Approximately 1/4" water pressure at manifold.

AUDIO-FREQUENCY POWER AMPLIFIER AND MODULATOR - CLASS B

MAXIMUM RATINGS, ABSOLUTE VALUES

D-C Plate Voltage	23	kilovolts
Maximum Signal D-C Plate Current *	20	amperes
Maximum Signal Plate Input *	460	kilowatts
Plate Dissipation *	225	kilowatts

TYPICAL OPERATION
(Unless otherwise specified, values are for two tubes)

D-C Plate Voltage	18	kilovolts
D-C Grid Voltage	-1200	volts
Peak A-F Grid-to-Grid Voltage	3500	volts
Zero Signal D-C Plate Current	6	amperes
Maximum Signal D-C Plate Current	38	amperes
Effective Load Resistance Plate-to-Plate	960	ohms
Maximum Signal Driving Power, approx.	3350	watts
Maximum Signal Power Output, approx.	430	kilowatts

* Averaged over any audio frequency cycle of sine-wave form.

RADIO FREQUENCY POWER AMPLIFIER AND OSCILLATOR - CLASS C TELEGRAPHY
(Key down conditions without AM)

MAXIMUM RATINGS, ABSOLUTE VALUES	2 mc to 24 mc	Below 2 mc	
D-C Plate Voltage	18	25	kilovolts
D-C Grid Voltage	-4	-4	kilovolts
D-C Plate Current	25	25	amperes
D-C Grid Current	3.5	3.5	amperes
Plate Input	360	500	kilowatts
Plate Dissipation	225	225	kilowatts

TYPICAL OPERATION

D-C Plate Voltage	14	18	kilovolts
D-C Grid Voltage	-1.8	-2.4	kilovolts
Peak R-F Grid Voltage	2.6	3.1	kilovolts
D-C Plate Current	20.0	23.5	amperes
D-C Grid Current, approx.	2.0	1.9	amperes
R-F Load Resistance	300	327	ohms
Driving Power, approx.	5.2	6.0	kilowatts
Power Out, approx.	200	300	kilowatts

R-F POWER AMPLIFIER AND OSCILLATOR-PLATE PULSED OPERATION

MAXIMUM RATINGS, ABSOLUTE VALUES

Peak Plate Pulse Supply Voltage	45	kilovolts
D-C Grid Voltage	-8000	volts
Peak Cathode Current	** 600	amperes
Plate Dissipation	225	kilowatts
Grid Dissipation	5000	watts
Pulse Length	50	μseconds

TYPICAL OPERATION	Cathode Drive	Grid Drive	
Peak Plate Pulse Supply Voltage	40	40	kilovolts
D-C Grid Voltage	-6000	-6000	volts
D-C Plate Current (during Pulse)	118	118	amperes
D-C Grid Current (during Pulse)	17.5	17.5	amperes
Peak R-F Plate Voltage	34	34	kilovolts
Peak R-F Grid Voltage	9.8	9.8	kilovolts
Driving Power (during Pulse) approx.	1200	168	kilowatts
Power Output (during Pulse) approx.	4580	3570	kilowatts
R-F Load Resistance	208	162	ohms
Duty Factor	.01	.01	

** Approximately 50% additional cathode emission is available at 8% above rated filament voltage. Filament operational life under these conditions will be reduced to approximately 30% that of normal filament voltage.

MODULATOR TUBE‡ - PULSED OPERATION
(SWITCH TUBE APPLICATIONS)

MAXIMUM RATINGS, ABSOLUTE VALUES

D-C Plate Voltage	65	max. kilovolts
Peak Positive Voltage (Instantaneous)	70	max. kilovolts
D-C Grid Voltage	-8	max. kilovolts
Peak Positive Grid Voltage	8	max. kilovolts
Pulse Plate Current	500	max. amperes
Pulse Grid Current	120	max. amperes
Pulse Cathode Current	600	max. amperes
Grid Dissipation	5	max. kilowatts
Pulse Length	2000	max. μseconds

TYPICAL OPERATION

D-C Plate Voltage	50	60	kilovolts
Pulse Plate Current	450	350	amperes
D-C Grid Voltage	-5.0	-6.0	kilovolts
Pulse Grid Current	90	68	amperes
Pulse Positive Grid Voltage	3.2	2.4	kilovolts
Plate Output Voltage	44	54	kilovolts
Pulse Power Output	19.8	19.0	megawatts

‡ Due to the high power capabilities, the tube must be protected against faults originating in the tube or circuitry. This can best be achieved by shorting the rectifier to ground by means of an electronic "crow-bar" circuit.

Additional information for specific applications can be obtained from the

Electron Tube Applications Section
ITT Components Division
P.O. Box 412
Clifton, New Jersey

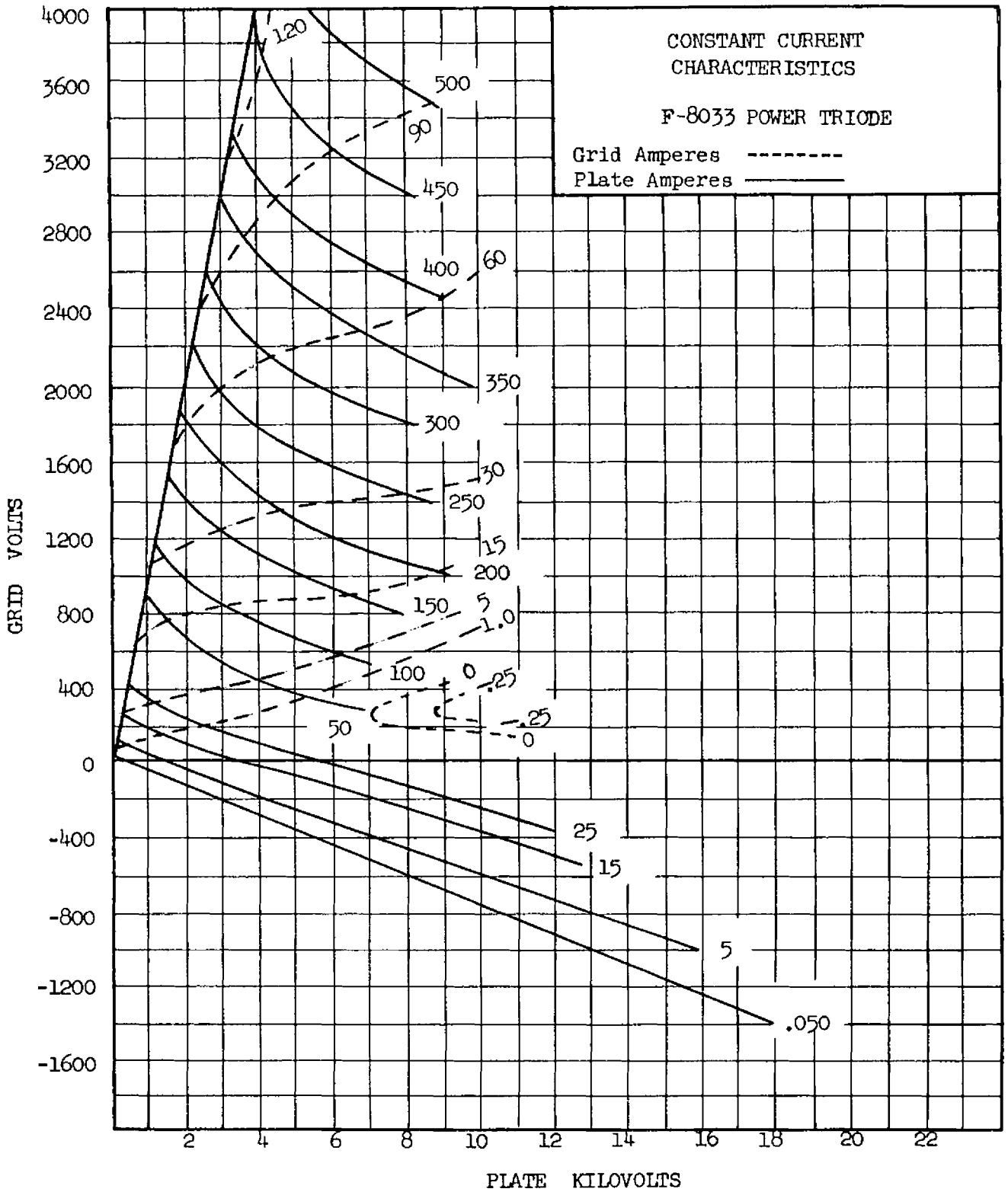
CONSTANT CURRENT
CHARACTERISTICS
F-8033 POWER TRIODE
Grid Amperes --------
Plate Amperes ————
GRID VOLTS
PLATE KILOVOLTS
4000
3600
3200
2800
2400
2000
1600
1200
800
400
0
-400
-800
-1200
-1600
2
4
6
8
10
12
14
16
18
20
22
120
500
90
450
400
60
350
300
30
250
15
200
150
5
1.0
100
0
.25
50
.25
0
25
15
5
.050

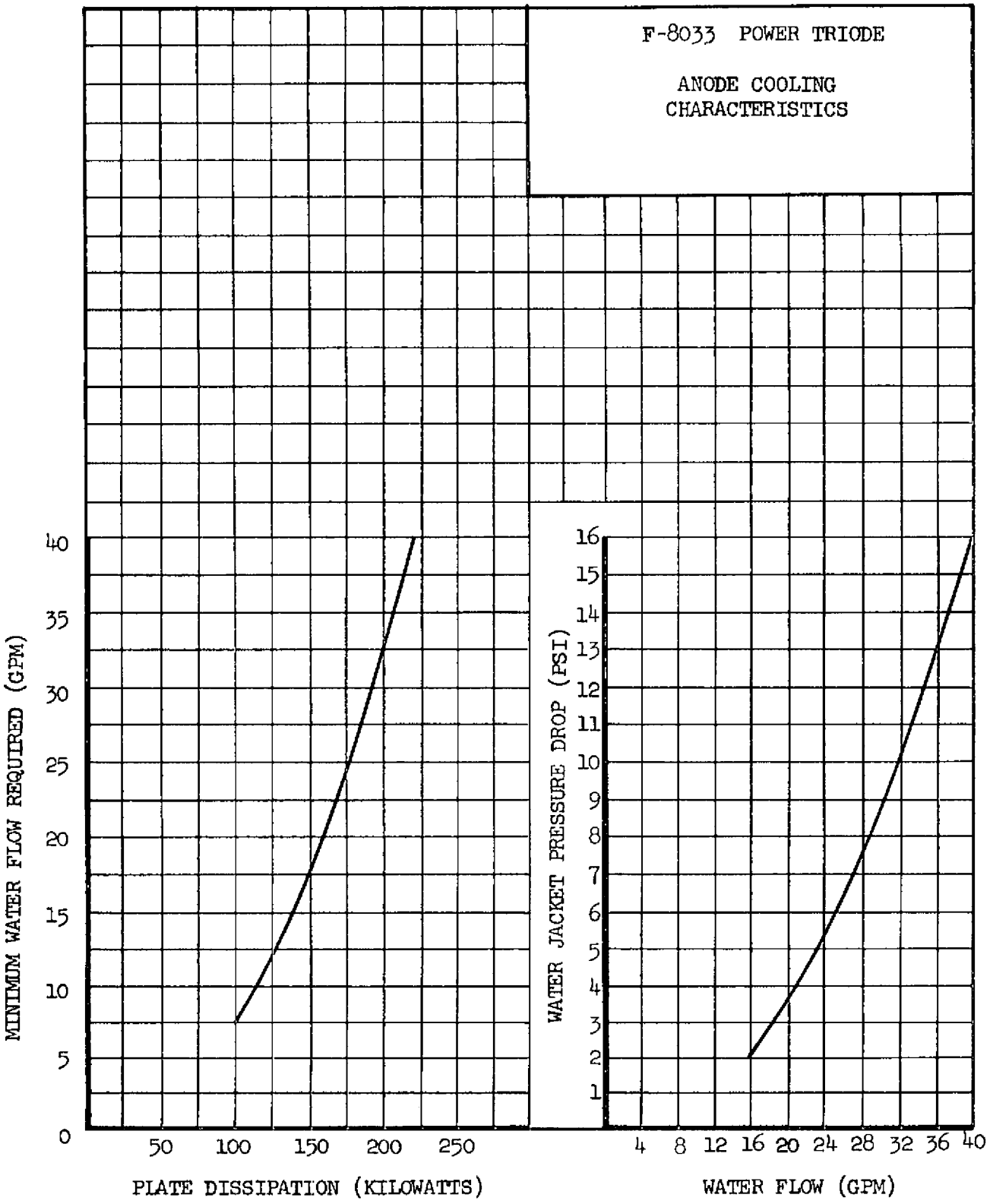
F-8033 POWER TRIODE
ANODE COOLING CHARACTERISTICS
MINIMUM WATER FLOW REQUIRED (GPM)
0
5
10
15
20
25
30
35
40
50
100
150
200
250
PLATE DISSIPATION (KILOWATTS)
WATER JACKET PRESSURE DROP (PSI)
1
2
3
4
5
6
7
8
9
10
11
12
13
14
15
16
4
8
12
16
20
24
28
32
36
40
WATER FLOW (GPM)

FIL. #1 - Yellow
FIL. #2 - Red

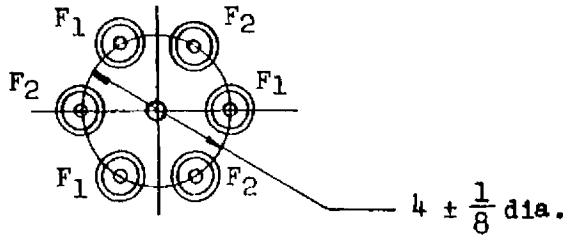

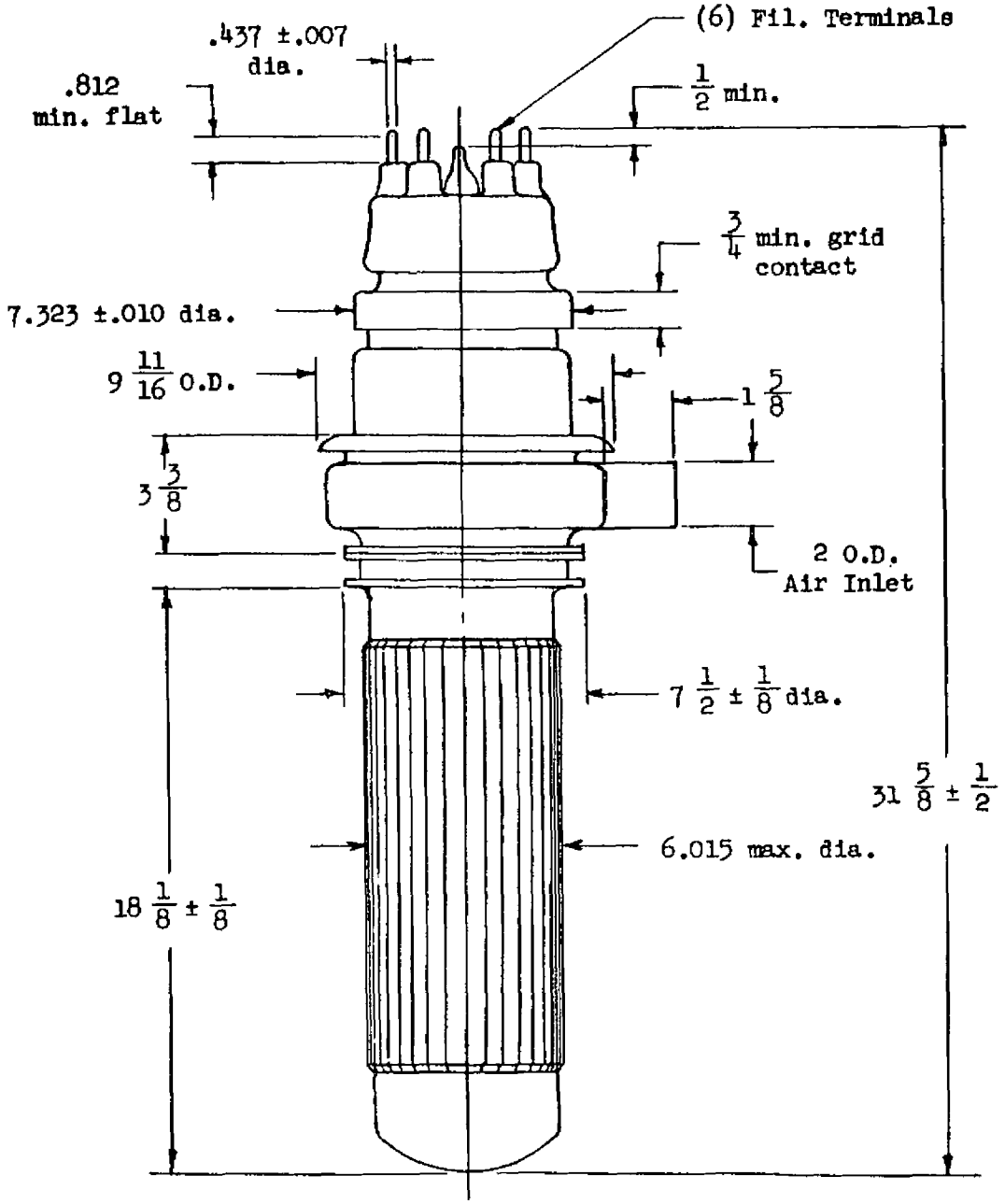

OUTLINE - F-8033 POWER TRIODE

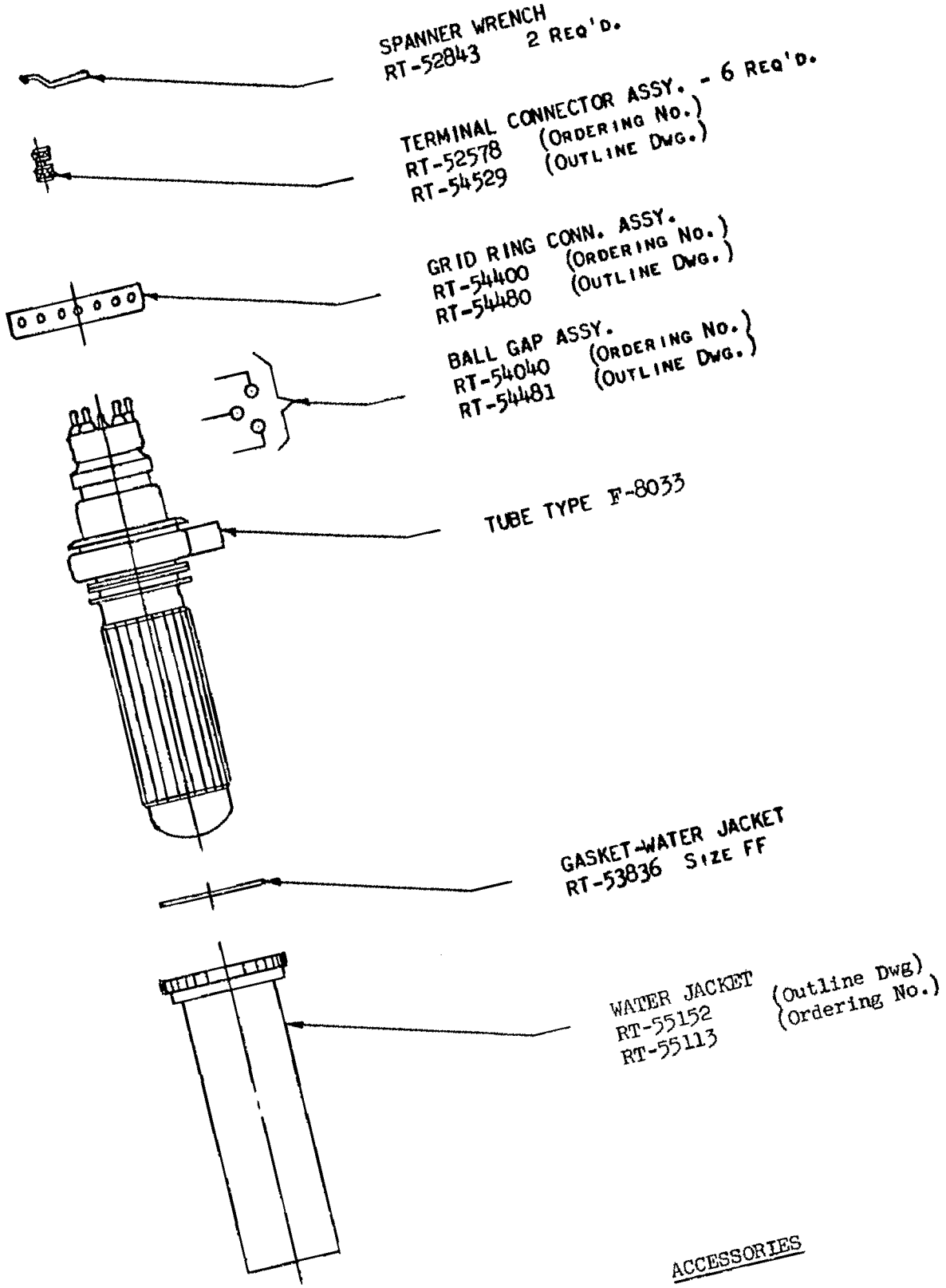

ACCESSORIES