TUNG-SOL

CATHODE RAY

COATED UNIPOTENTIAL CATHODE

HEATER

6.3 VOLTS 0.6 AMPERE

AC OR DC

ANY MOUNTING POSITION

THE 7JP4 IS A DIRECTLY VIEWED PICTURE TUBE INTENDED FOR USE IN LOW COST TELEVISION RECEIVERS. IT IS ALSO SUITABLE FOR OSCILLOGRAPH APPLICATIONS. IT HAS A HIGH-EFFICIENCY, WHITE FLUORESCENT SCREEN AND USES ELECTROSTATIC FOCUS AND ELECTROSTATIC DEFLECTION TO PROVIDE PICTURES 4"X5 1/2"SIZE.

DESCRIPTION

FLUORESCENCE	WHITE
PERSISTENCE	MEDIUM
DEFLECTION METHOD	ELECTROSTATIC
FOCUSING METHOD	ELECTROSTATIC

DIRECT INTERELECTRODE CAPACITANCES - APPROX.

CATHODE TO ALL OTHER ELECTRODES: K TO (H+G_1+G_2&P_2+P_1+DJ_1+DJ_2+DJ_3+DJ_4+IC)	9.5	μμf
GRID #1 TO ALL OTHER ELECTRODES: G_1 TO (H+K+G_2&P_2+P_1+DJ_1+DJ_2+DJ_3+DJ_4+IC)	8.5	μμf
DJ_1 TO DJ_2	3.5	μμf
DJ_3 TO DJ_4	2.0	μμf
DJ_1 TO ALL OTHER ELECTRODES: DJ_1 TO (H+K+G_1+G_2&P_2+P_1+DJ_2+DJ_3+DJ_4+IC)	11.0	μμf
DJ_2 TO ALL OTHER ELECTRODES: DJ_2 TO (H+K+G_1+G_2&P_2+P_1+DJ_1+DJ_3+DJ_4+I_C)	11.0	μμf
DJ_3 TO ALL OTHER ELECTRODES: DJ_3 TO (H+K+G_1+G_2&P_2+P_1+DJ_1+DJ_2+DJ_4+IC)	8.0	μμf
DJ_4 TO ALL OTHER ELECTRODES: DJ_4 TO (H+K+G_1+G_2&P_2+P_1+DJ_1+DJ_2+DJ_3+IC)	8.0	μμf

RATINGS

INTERPRETED ACCORDING TO RMA STANDARD M8-210

HEATER VOLTAGE	6.3	VOLTS
MAXIMUM ANODE #2 AND GRID #2 VOLTAGE	6 000	VOLTS
MAXIMUM ANODE #1 VOLTAGE	2 800	VOLTS
MAXIMUM GRID #1 VOLTAGE:		
NEGATIVE BIAS VOLTAGE	200	VOLTS
POSITIVE BIAS VOLTAGE	0	VOLTS
POSITIVE PEAK VOLTAGE	2	VOLTS
MAXIMUM PEAK VOLTAGE BETWEEN ANODE #2 AND ANY DEFLECTING ELECTRODE	750	VOLTS
MAXIMUM PEAK-HEATER CATHODE VOLTAGE:		
HEATER NEGATIVE WITH RESPECT TO CATHODE:		
DURING EQUIPMENT WARM-UP PERIOD NOT EXCEEDING 15 SECONDS	410	VOLTS
AFTER EQUIPMENT WARM-UP PERIOD	125	VOLTS
HEATER POSITIVE WITH RESPECT TO CATHODE	125	VOLTS

CONTINUED ON FOLLOWING PAGE

PRINTED IN U.S.A.

PLATE 2193

MAY 2 1949

COPYRIGHT 1949 BY TUNG-SOL LAMP WORKS INC. ELECTRONIC TUBE DIVISION NEWARK, NEW JERSEY, U S A

TUNG-SOL

CONTINUED FROM PRECEDING PAGE

TYPICAL OPERATING CONDITIONS AND CHARACTERISTICS

ANODE #2 VOLTAGE	6 000	VOLTS
ANODE #1 VOLTAGE FOR FOCUS (APPROX.)	2 000	VOLTS
GRID #1 VOLTAGE FOR VISUAL CUT-OFF (APPROX.)	-120	VOLTS
DEFLECTION FACTORS:		
DJ_1 AND DJ_2 (APPROX.)	216	VOLTS DC/IN.
DJ_3 AND DJ_4 (APPROX.)	177	VOLTS DC/IN.
MAXIMUM GRID #1 CIRCUIT RESISTANCE	1.5	MEGOHMS
MAXIMUM RESISTANCE IN ANY DEFLECTING-ELECTRODE[A] CIRCUIT	5	MEGOHMS

[A] IT IS RECOMMENDED THAT THE DEFLECTING-ELECTRODE-CIRCUIT RESISTANCES BE APPROXIMATELY EQUAL.

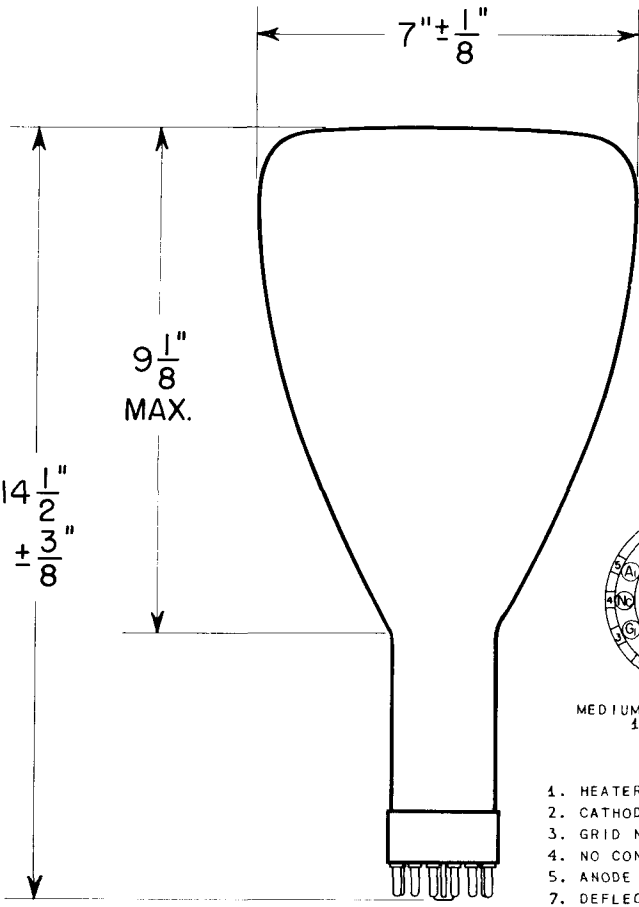

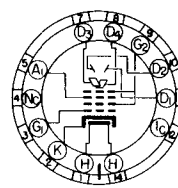

MEDIUM SHELL DIHEPTAL
12 PIN BASE
$14G_1$

1. HEATER
2. CATHODE
3. GRID NO. 1
4. NO CONNECTION
5. ANODE NO. 1
7. DEFLECTING ELECTRODE DJ_3
8. DEFLECTING ELECTRODE DJ_4
9. GRID NO. 2, ANODE NO. 2
10. DEFLECTING ELECTRODE DJ_2
11. DEFLECTING ELECTRODE DJ_1
12. INTERNAL CONNECTION
14. HEATER

PLATE 2194
MAY 2 1949

COPYRIGHT 1949 BY TUNG-SOL LAMP WORKS INC. ELECTRONIC TUBE DIVISION NEWARK, NEW JERSEY, U.S.A.

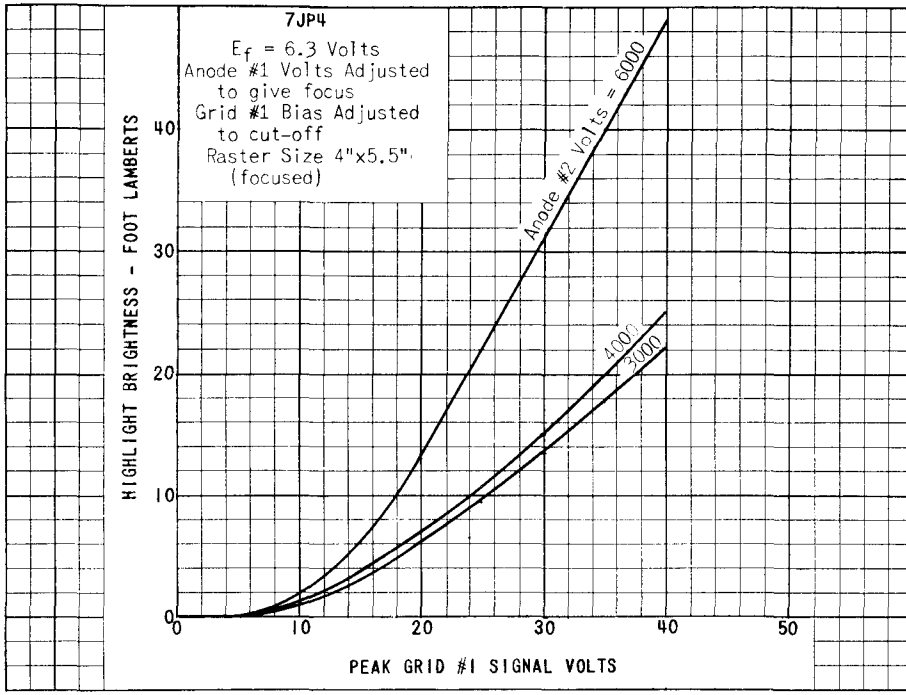

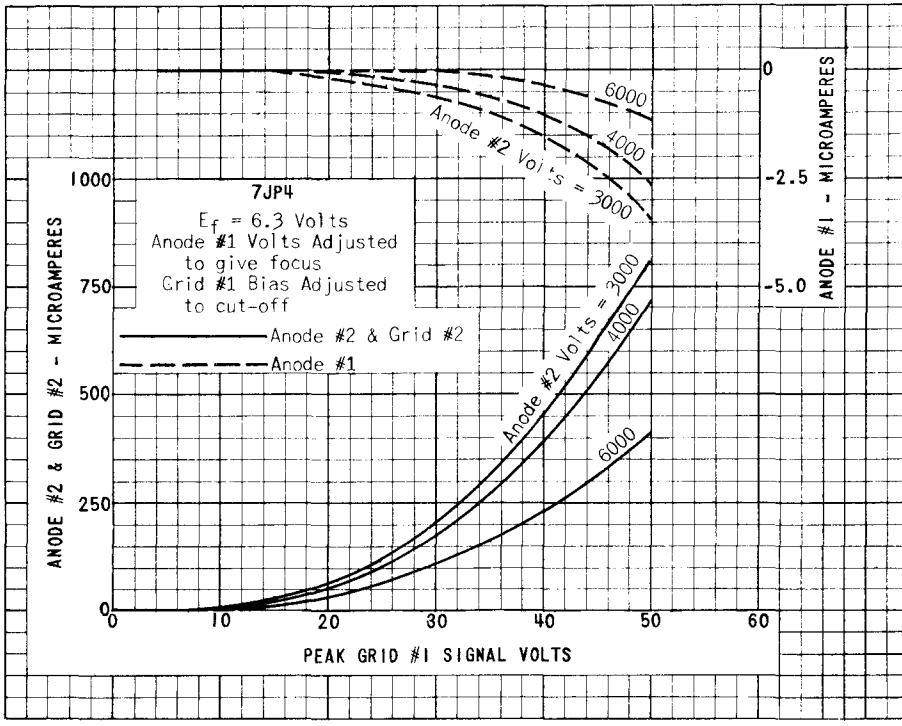

PRINTED IN U.S.A.

PLATE
2195

MAY 2
1949

COPYRIGHT 1949 BY TUNG-SOL LAMP WORKS INC. ELECTRONIC TUBE DIVISION NEWARK, NEW JERSEY, U.S.A.