ELECTRICAL DATA

HEATER OPERATION

	19DE7	13DE7	10DE7	6DE7
Heater Voltage	19.4	13.0	9.7	6.3 Volts
Heater Current	300	450	600	900 Ma
Heater Warm-up Time	11	11	11	— Seconds
Maximum Heater-Cathode Voltage				
Heater Negative with Respect to Cathode				
Total DC and Peak				200 Volts
Heater Positive with Respect to Cathode				
DC				100 Volts
Total DC and Peak				200 Volts

DIRECT INTERELECTRODE CAPACITANCES (Unshielded)

	Section No. 1	Section No. 2
Grid to Plate	4.0	8.5 Pf
Input: g to (h + k)	2.2	5.5 Pf
Output: p to (h + k)	0.52	1.0 Pf

RATINGS (Design Maximum Rating System)

***Vertical Deflection Oscillator and Amplifier*(1)**

	Section No. 1 Oscillator	Section No. 2 Amplifier
DC Plate Voltage (Max.)	330	275 Volts
Peak Positive Pulse Plate Voltage (Abs. Max.)	—	1500 Volts
Peak Negative Pulse Grid Voltage (Max.)	400	250 Volts
Plate Dissipation (Max.)(2)	1.5	7.0 Watts
Average Cathode Current (Max.)	22	50 Ma
Peak Cathode Current (Max.)	77	175 Ma
Grid Circuit Resistance (Self Bias) (Max.)	2.2	2.2 Megohms

CHARACTERISTICS AND TYPICAL OPERATION

	Section No. 1	Section No. 2
Plate Voltage	250	150 Volts
Grid No. 1 Voltage	-11	-17.5 Volts
Plate Current	5.5	35 Ma
Transconductance	2000	6500 μmhos
Amplification Factor	17.5	6.0
Plate Resistance (Approx.)	8750	925 Ohms
Grid Voltage for Ib = 10 μa	-20	— Volts
Grid Voltage for Ib = 50 μa	—	-44 Volts
Plate Current at Ec = -24 Vdc	—	10 Ma
Zero Bias Plate Current		
Eb = 60 V; Ec = 0 (Instantaneous Values)	—	80 Ma

NOTES:

(1) For operation in a 525 line, 30 frame system as described in "Standards of Good Engineering Practice for Television Broadcast Stations; Federal Communications Commission," the duty cycle of the voltage pulse must not exceed 15% of one horizontal scanning cycle.

(2) In stages operating with grid leak bias, an adequate bias resistor or other suitable means is required to protect the tube in the absence of excitation.

6DJ8

7DJ8, 12DJ8

VHF CASCODE AMPLIFIER

Double Triode

Construction .....Miniature T-6½
Base .....Button 9 Pin, E9-1
Basing 9AJ
Outline 6-2
Maximum Diameter .....0.875 In.
Maximum Seated Height .....1.937 In.
Maximum Overall Height .....2.187 In.

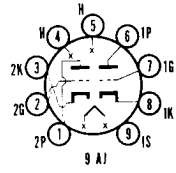

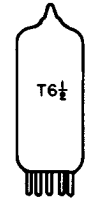

ELECTRICAL DATA

HEATER OPERATION

	12DJ8	7DJ8	6DJ8
Heater Voltage	12.6	7.0	6.3 Volts
Heater Current	180	300	365 Ma
Maximum Heater-Cathode Voltage			
RMS, Voltage Between Cathode and Heater (Grounded Cathode Section)	50	80	50 Volts

DC Component of Cathode to Heater Voltage (Grounded Grid Section)	130	130	130 Volts
Peak Voltage Between Cathode and Heater; Cathode Positive with Respect to Heater (Grounded Grid Section)	150	180	150 Volts

DIRECT INTERELECTRODE CAPACITANCES

	Unshielded	Shielded
Grounded-Cathode Section(1)		
Grid to All Elements Except Plate	3.3	3.3 Pf
Plate to All Elements Except Grid	1.8	2.5 Pf
Plate to Grid	1.4	1.4 Pf
Grid to Heater	0.13	0.13 Pf
Grounded-Grid Section(1)		
Cathode to All Elements Except Plate	6.0	6.0 Pf
Plate to All Elements Except Cathode	2.8	3.7 Pf
Plate to Grid	1.4	1.4 Pf
Cathode to Heater	2.7	2.7 Pf
Plate to Cathode	0.18	0.16 Pf
Plate (Grounded-Grid Section) to Plate (Grounded-Cathode Section) (Max.)	0.045	0.15 Pf
Grid (Grounded-Cathode Section) to Plate (Grounded-Grid Section) (Max.)	0.005	0.005 Pf

RATINGS (Design Center Rating System) (Each Section)

Plate Supply Voltage (Ib = 0 Ma) (Max.)	550 Volts
Plate Voltage (Max.)(2)	130 Volts
Plate Dissipation (Max.)	1.8 Watts
Cathode Current (Max.)	25 Ma
Negative Grid Voltage (Max.)	50 Volts
Grid Circuit Resistance (Max.)	1.0 Megohm

CHARACTERISTICS AND TYPICAL OPERATION
Class A1 Amplifier (Each Section)

Plate Voltage	90 Volts
Grid Voltage	−1.3 Volts
Plate Current	15 Ma
Transconductance	12,500 μmhos
Amplification Factor	33
Equivalent Noise Resistance	300 Ohms

NOTES:

(1) Grounded-cathode section (Section No. 1) connects to Pins 6, 7, and 8. Grounded-grid section (Section No. 2) connects to Pins 1, 2, and 3.

(2) In order not to exceed the maximum permissible plate voltage when the cascode amplifier has AGC voltage applied to it, a voltage divider is recommended for the grid of the grounded-grid section (Circuit A).
With grid current biasing for the grounded-cathode section, the plate voltage across this section should not exceed 75 volts when an AGC voltage is not utilized (Circuit B).

CIRCUIT A

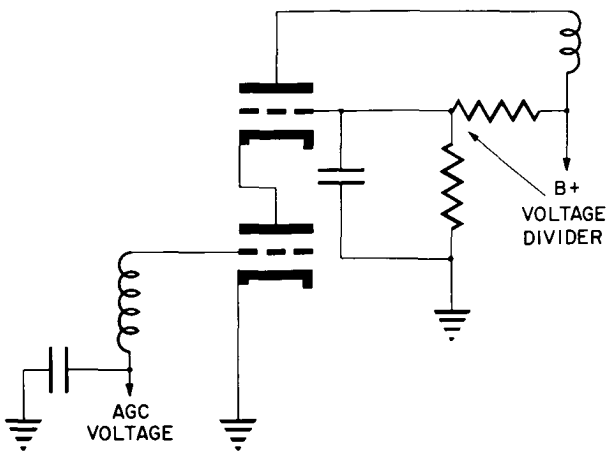

CIRCUIT B

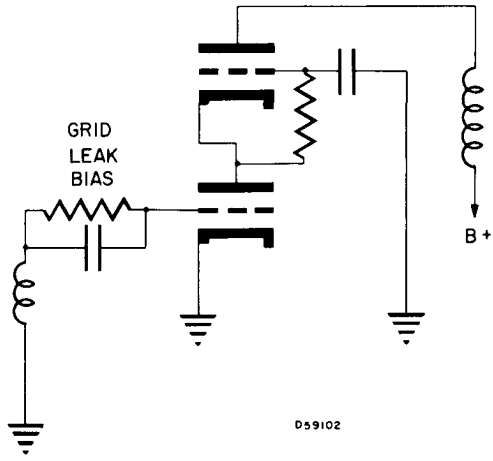

6DK6

3DK6, 4DK6, 12DK6

Color Television Type

IF AMPLIFIER

Sharp Cutoff Pentode

Construction .....Miniature T-5½
Base .....Button 7 Pin, E7-1
Basing 7CM
Outline 5-2
Maximum Diameter .....0.750 In.
Maximum Seated Height .....1.875 In.
Maximum Overall Height .....2.125 In.

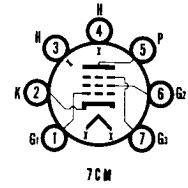

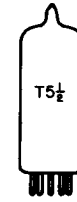

ELECTRICAL DATA

HEATER OPERATION

	12DK6	4DK6	3DK6	6DK6
Heater Voltage	12.6	4.2	3.15	6.3 Volts
Heater Current	150	450	600	300 Ma
Heater Warm-up Time	—	11	11	— Seconds
Maximum Heater-Cathode Voltage				
Heater Negative with Respect to Cathode				
DC Component	—	200	200	— Volts
Total DC and Plate	200	300	300	200 Volts
Heater Positive with Respect to Cathode				
DC	100	100	100	100 Volts
Total DC and Peak	200	200	200	200 Volts

DIRECT INTERELECTRODE CAPACITANCES (Unshielded)

Grid No. 1 to Plate (Max.) ..... 0.025 Pf
Input ..... 6.3 Pf
Output ..... 1.9 Pf

RATINGS (Design Maximum Rating System)

Plate Voltage (Max.) ..... 330 Volts
Grid No. 2 Supply Voltage (Max.) ..... 330 Volts
Grid No. 2 Voltage .....See Rating Chart (Gen. Info. Sec.)
Plate Dissipation (Max.) ..... 2.3 Watts
Grid No. 2 Dissipation (Max.) ..... 0.55 Watt
Positive Grid No. 1 Voltage (Max.) ..... 0 Volt

CHARACTERISTICS AND TYPICAL OPERATION

Plate Voltage ..... 125 Volts
Grid No. 3 Voltage (Suppressor) .....Connected to Cathode at Socket
Grid No. 2 Voltage ..... 125 Volts
Cathode Bias Resistor ..... 56 Ohms
Plate Current ..... 12.0 Ma
Grid No. 2 Current ..... 3.8 Ma
Transconductance ..... 9800 μmhos
Plate Resistance ..... 0.35 Megohm
Grid No. 1 Bias for Ib of 20 μa (Approx.) ..... –6.5 Volts