POWER TRIODE

DESCRIPTION

The Nucor tube type 7C25 is a forced-air-cooled general purpose, three electrode tube, specifically designed for industrial and communication applications. The anode is capable of dissipating 2.5 kilowatts. It features a sturdily-supported, double-spiral thoriated tungsten filament. Rugged kovar grid and filament seals insure greater protection against mechanical stress and shock. The wide spacing between elements is an additional feature of this tube. Flexible leads constructed of O.F.H.C. copper can be modified to individual customer requirements.

Full input ratings apply to 30 mc. Reduced ratings, as indicated, are applicable for useful power outputs extending to 50 mc.

SPECIFICATIONS

ELECTRICAL:

Filament Voltage ..... 11 Volts
Filament Current ..... 28 Amperes
Filament Starting Current ..... 56 Amperes
Filament Cold Resistance ..... 0.047 Ohms
Peak Cathode Current ..... 10 Amperes
Amplification Factor 25
$E_b = 3{,}000$ Volts, $1_b = 0.200$ Amps.
Interelectrode Capacitances
Grid-Plate ..... 13.2 $\mu\mu$f
Grid-Filament ..... 14.5 $\mu\mu$f
Plate-Filament ..... 1.7 $\mu\mu$f

PHYSICAL:

Mounting Position —
Vertical, Anode Down

Type of Cooling — Forced Air
Maximum Incoming Air Temperature .... 45°C

Required Air Flow on Anode

Plate Dissipation (Kilowatts)	2.5	2.0	1.5
Air Flow—Cubic Feet per min.	150	120	90
Pressure — Inches Water	2.5	1.6	0.9

Maximum Glass Temperature ..... 150°C
Net Weight, Approximate ..... 5 pounds

MAXIMUM RATINGS AND TYPICAL OPERATING CONDITIONS

FOR MAXIMUM FREQUENCY OF 50 MEGACYCLES

RADIO-FREQUENCY POWER AMPLIFIER AND OSCILLATOR -- CLASS C TELEGRAPHY

MAXIMUM RATINGS

DC Plate Voltage	5,000 Volts
DC Grid Voltage	—1,500 Volts
DC Plate Current	1.3 Amperes
DC Grid Current	0.150 Amperes
Plate Input	6.5 Kilowatts
Plate Dissipation	2.5 Kilowatts

TYPICAL OPERATION

DC Plate Voltage	4,000	4,500	5,000 Volts
DC Grid Voltage	—400	—500	—600 Volts
Peak R-F Grid Voltage	1,000	1,150	1,300 Volts
DC Plate Current	1.0	1.2	1.2 Amperes
DC Grid Current	0.08	0.1	0.13 Amperes
Driving Power, Approx.	80	110	160 Watts
Power Output	2.5	3.1	4.0 Kilowatts

PLATE-MODULATED RADIO-FREQUENCY POWER AMPLIFIER -- CLASS C TELEPHONY

(Carrier conditions per tube use with a maximum modulator factor of 1.0)

MAXIMUM RATINGS

DC Plate Voltage	4,000 Volts
DC Grid Voltage	—1,500 Volts
DC Plate Current	1.0 Amperes
DC Grid Current	0.15 Amperes
Plate Input	4.0 Kilowatts
Plate Dissipation	1.6 Kilowatts

TYPICAL OPERATION

DC Plate Voltage	3,500 Volts
DC Grid Voltage	—500 Volts
Peak R-F Grid Voltage	1,000 Volts
DC Plate Current	0.825 Amperes
DC Grid Current	0.110 Amperes
Driving Power, Approx.	100 Watts
Power Output	2 Kilowatts

PLATE CHARACTERISTICS

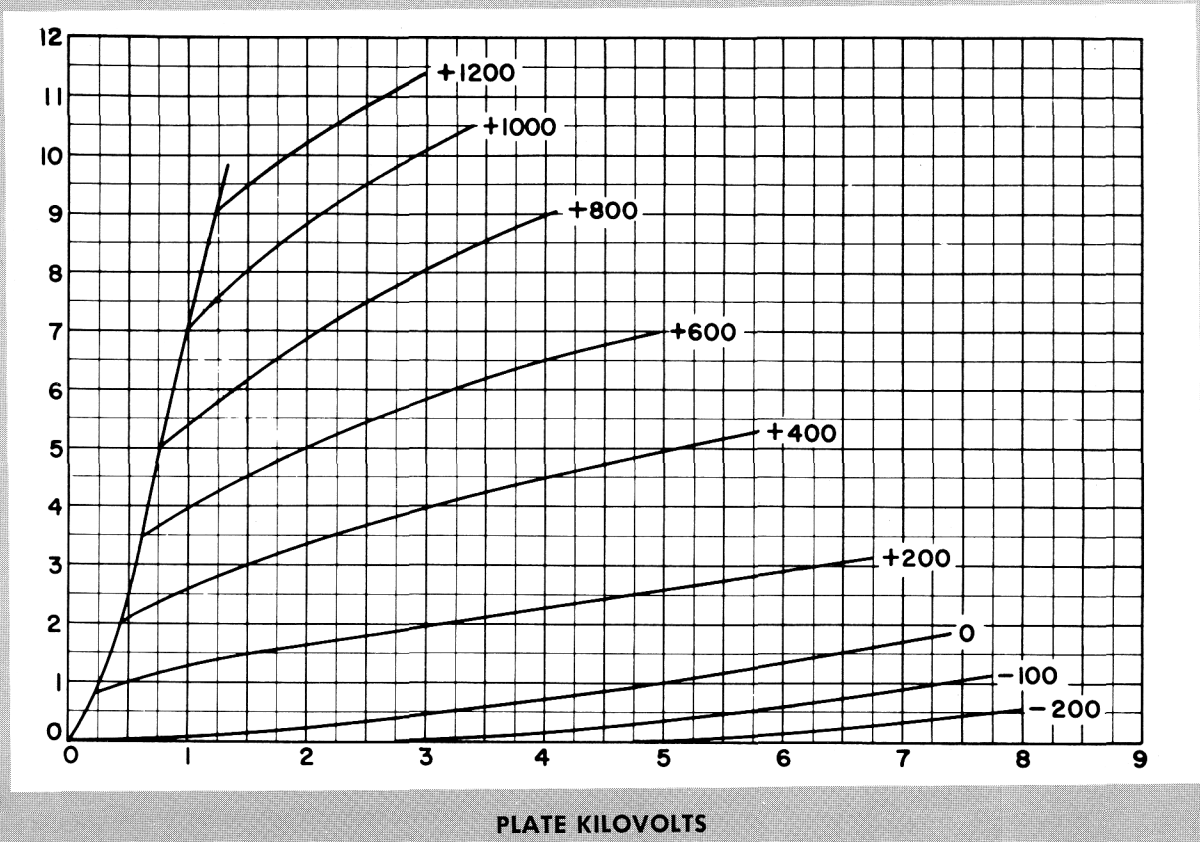

CONSTANT CURRENT CHARACTERISTICS

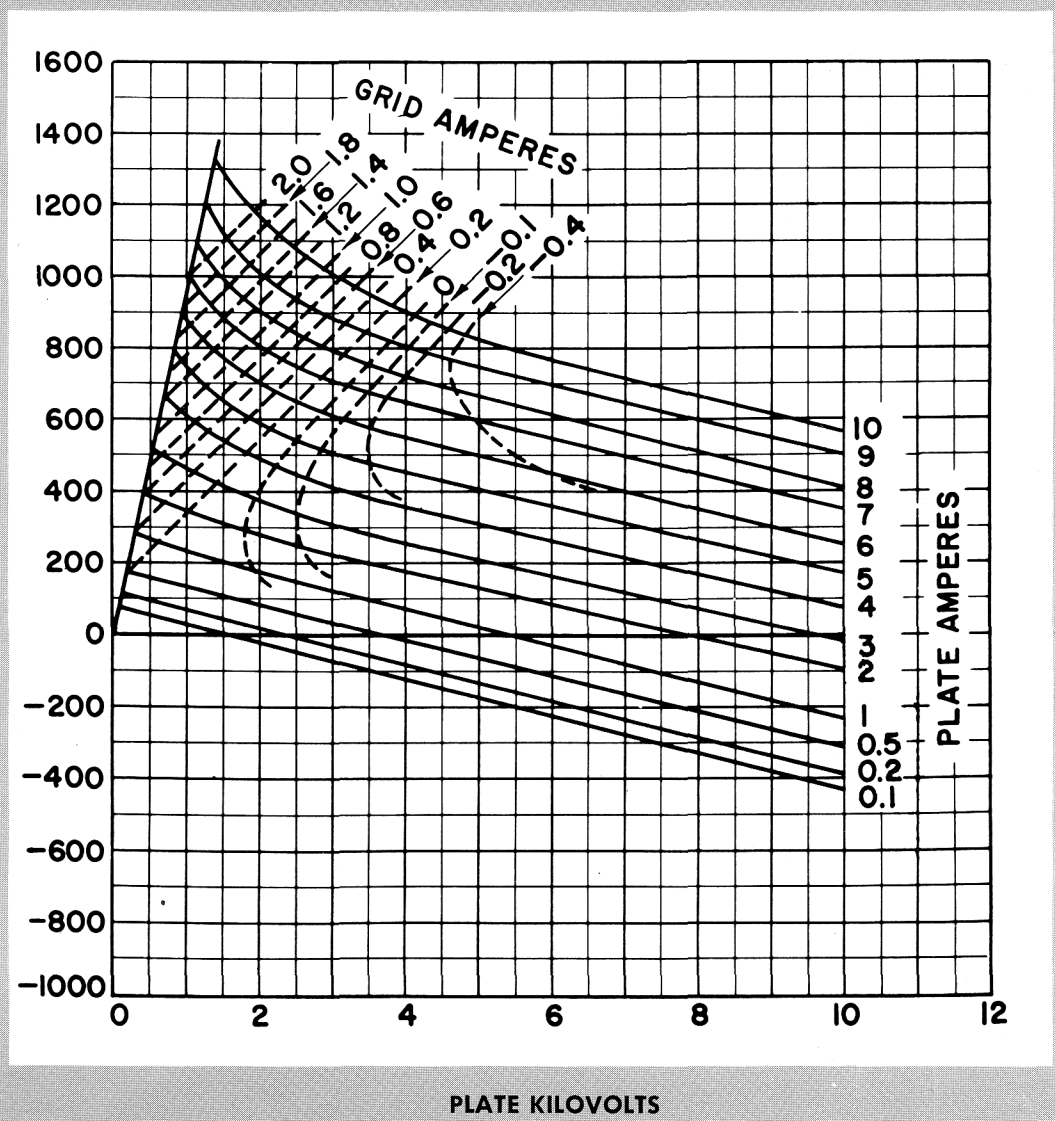

POWER TRIODE

TYPE

7C25

PLATE DISSIPATION —2.5KW

CENTRAL ELECTRONIC

MANUFACTURERS

DENVILLE, NEW JERSEY

GRID CHARACTERISTICS

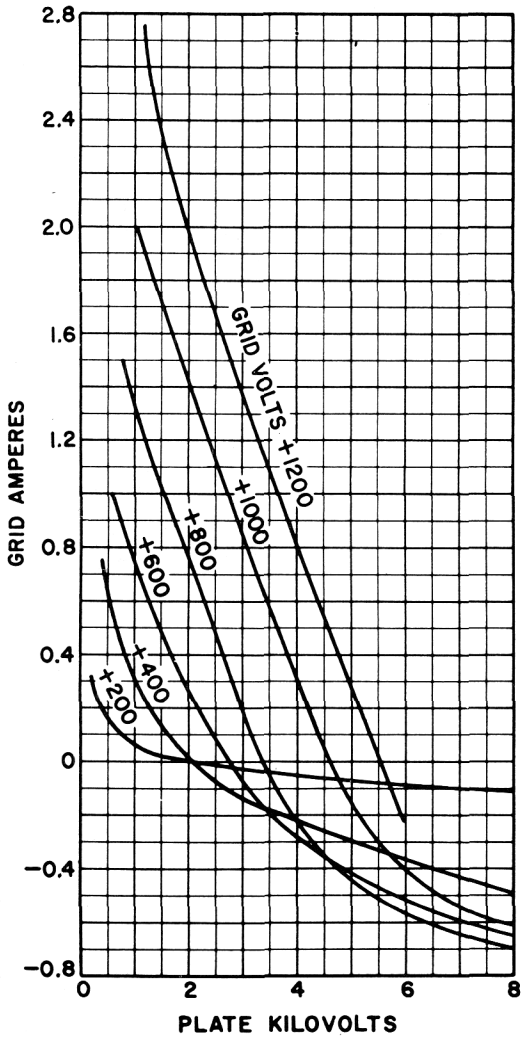

TERMINAL COLOR CODE

1=GRID -- BLACK
2=FIL. -- YELLOW
3=GRID -- BLACK
4=F.C.T. -- RED
5=GRID -- BLACK
6=FIL. -- YELLOW

OUTLINE

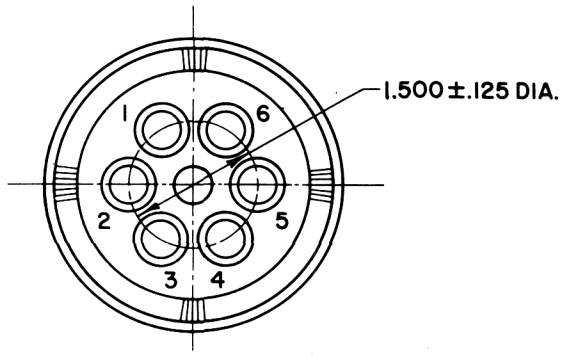

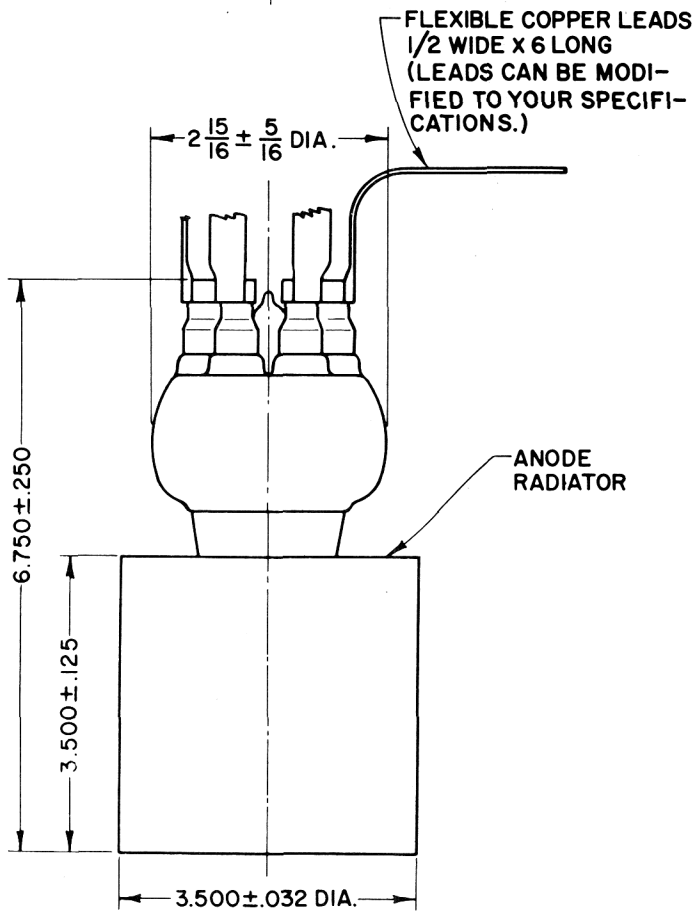

DIVISION OF NUCLEAR CORPORATION OF AMERICA

Printed in U. S. A.