CONTINENTAL ELECTRONICS CORP. OF CALIFORNIA

from JEDEC release #2584, Sept. 14, 1959

7AZP24 CATHODE RAY TUBE

The Continental 7AZP24 is a seven-inch, magnetically focused and deflected, cathode ray tube intended primarily for use in television flying-spot scanners where strong light output, high resolution, and an optically perfect faceplate are required. The faceplate of the 7AZP24 is carefully manufactured of non-browning glass to conform to a uniform standard of curvature and thickness. An accelerating potential of 30,000 volts produces a small spot size for very high resolution. Other screen phosphors may be obtained upon request.

GENERAL CHARACTERISTICS

Electrical Data

Heater Voltage	6.3 Volts
Heater Current	0.6±10% Amperes
Focusing Method	Magnetic
Deflecting Method	Magnetic
No-Ion-Trap Gun	No Magnet Required
Deflection Angle, approximate	57 Degrees
Direct Interelectrode Capacitances, approximate	
Cathode to All Other Electrodes	5 uuf
Grid No. 1 to All Other Electrodes	7 uuf
External Conductive Coating to Anode	
Maximum	700 uuf
Minimum	300 uuf

Optical Data

Screen	P24 Aluminized
Fluorescence	Light Green
Persistence	Extremely Short

Mechanical Data

Over-all Length	18-3/8±1/2 Inches
Minimum Useful Screen Diameter (Maximum Assured)	6.0 Inches
Greatest Diameter of Bulb	7-1/2±1/8 Inches
Neck Length	11-3/8 Inches
Bulb Contact	JEDEC No. J1-22
Base	Small Shell Duodecal 7-pin, JEDEC No. B7-51
Basing	JEDEC Designation 12D

Maximum Ratings (Absolute Maximum Ratings)

Anode Voltage	30,000 Max. Volts
Grid No. 2 Voltage	410 Max. Volts
Grid No. 1 Voltage, Bias Value Range (DC)	-200 to 0 Volts
Peak Heater-Cathode Voltage:	
Heater negative with respect to cathode	125 Max. Volts
Heater positive with respect to cathode	125 Max. Volts

Typical Operating Conditions

Anode Voltage	27,000 to 30,000 Volts
Grid No. 2 Voltage	300 Volts
Grid No. 1 Voltage for Visual Extinction of Undeflected, Focused Spot	-30 to -90 Volts

OUTLINE DRAWING

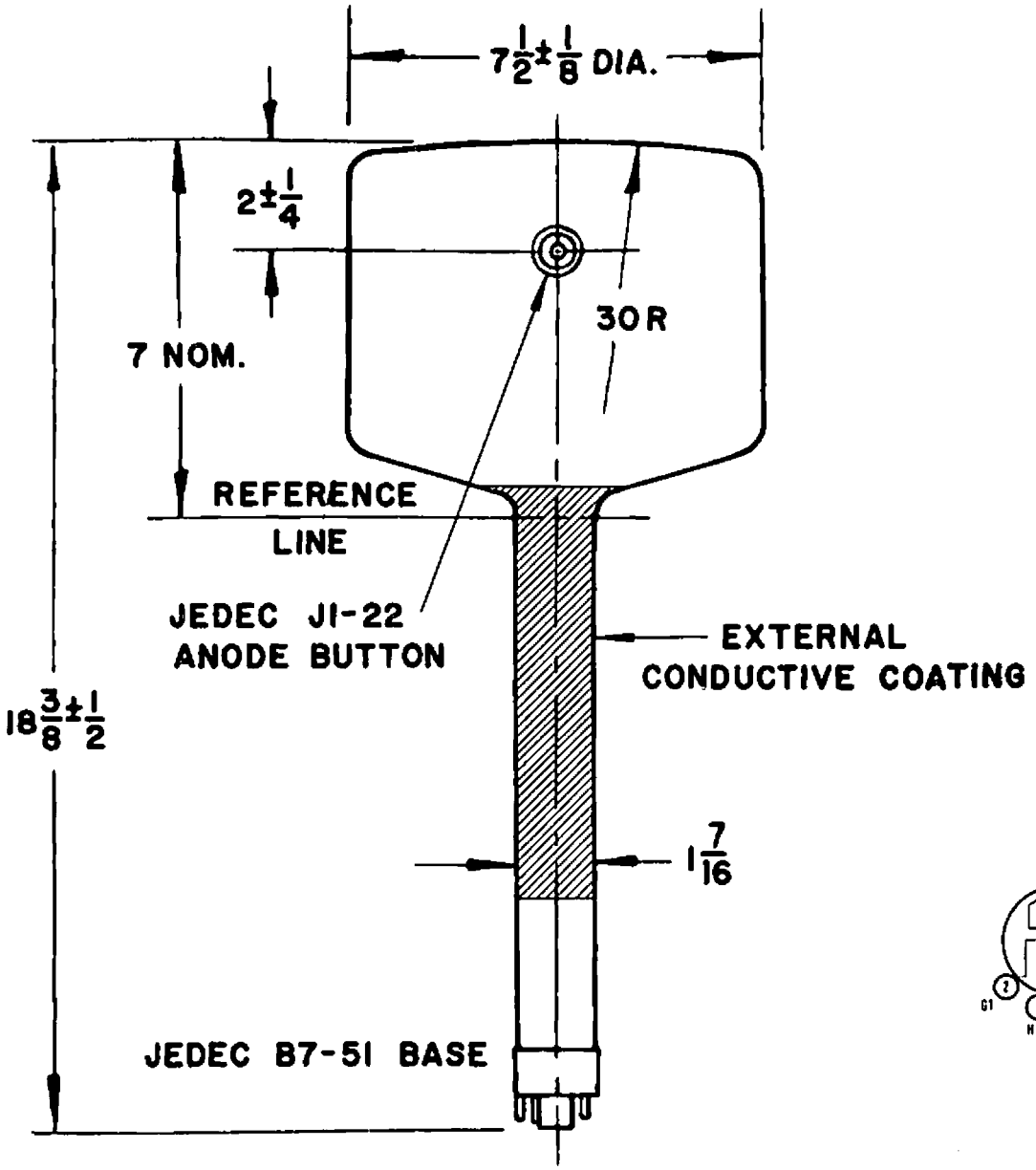

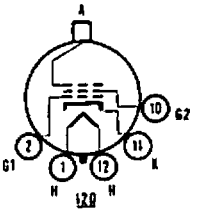

Note 1. Grid No. 3 is internally connected to the anode and is referred to herein as anode. When operating the tube at recommended anode voltages X-ray radiation shielding may be necessary to protect against possible danger of personal injury from prolonged exposure at close range.

Note 2. Continuous operation at high heater to cathode voltage is not recommended.

Note 3. The anode contact aligns with vacant pin position no. 3 ± 10°.

Note 4. External conductive coating must be grounded.