SYLVANIA engineering data service

SYLVANIA
7AUP4
7AUP7

CHARACTERISTICS

GENERAL DATA

Focusing Method	Electrostatic	
Deflecting Method	Magnetic	
Deflection Angle (Approx.)	70 Degrees	
	7AUP4	**7AUP7**
Phosphor*	Aluminized P4	Aluminized P7
Fluorescence	White	White
Persistence	Short to Medium	Long
Phosphorescence	—	Yellow-Green
Faceplate	Spherical, Clear Glass	

*In addition to the types shown, the 7AUP- can be supplied with several other screen phosphors.

ELECTRICAL DATA

Heater Voltage	6.3 Volts
Heater Current	0.3 ± 5% Ampere
Direct Interelectrode Capacitances (Approx.)	
Cathode to All Other Electrodes	7.0 μμf
Grid No. 1 to All Other Electrodes	9.0 μμf
Grid No. 2 to All Other Electrodes	7.0 μμf

MECHANICAL DATA

Minimum Useful Screen Diameter	6 Inches
Bulb	LEA 480 or Equivalent
Bulb Contact (Recessed Small Ball Cap)	J1-22
Base[1]	E9-37
Basing	9HT
Weight (Approx.)	2¼ Pounds

RATINGS

MAXIMUM RATINGS (Absolute Maximum Values)

Anode Voltage	11,000 Volts	dc
Grid No. 4 Voltage (Focusing Electrode)	1100 Volts	dc
Grid No. 2 Voltage	770 Volts	dc
Grid No. 1 Voltage		
Negative Bias Value	155 Volts	dc
Positive Bias Value	0 Volts	dc
Positive Peak Value	0 Volts	
Peak Heater-Cathode Voltage		
Heater Negative with Respect to Cathode		
During Warm-up Period not to Exceed 15 Seconds	450 Volts	
After Warm-up Period	200 Volts	
Heater Positive with Respect to Cathode	200 Volts	

TYPICAL OPERATING CONDITIONS

Anode Voltage	8000 Volts	dc Max.
Grid No. 4 Voltage for Focus[2]	0 to 300 Volts	dc
Grid No. 2 Voltage	300 Volts	dc
Grid No. 1 Voltage		
Required for Spot Cutoff	−25 to −60 Volts	dc
Line Width[3]	0.012 Inch	

CIRCUIT VALUES

Grid No. 1 Circuit Resistance	1.5 Megohms	Max.
Grid No. 2 Circuit Resistance[4]	10,000 Ohms	Max.
Grid No. 4 Circuit Resistance[4]	10,000 Ohms	Max.

QUICK REFERENCE DATA

Monitor Tube (7AUP4)
Radar Indicator (7AUP7)
7″ Direct Viewed
Round Glass Type
Spherical Faceplate
Clear Glass
Aluminized Screen
Magnetic Deflection
Electrostatic Focus
⅞ Inch Neck Diameter
Short Length

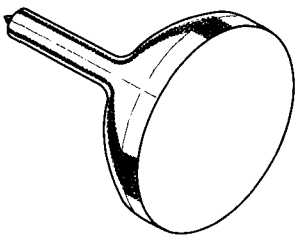

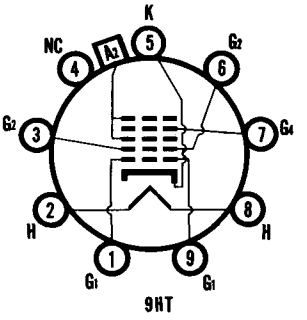

SYLVANIA
ELECTRONIC TUBES
A Division of
Sylvania Electric Products Inc.
PICTURE TUBE OPERATIONS
SENECA FALLS, NEW YORK

Prepared and Released By The
TECHNICAL PUBLICATIONS SECTION
EMPORIUM, PENNSYLVANIA

DECEMBER, 1960

File Under
SPECIAL AND GENERAL PURPOSE
CATHODE RAY TUBES

NOTES:

1. *A socket with a center opening to clear the tubulation should be used. Care should be exercised to avoid danger to the tubulation.*
2. *With combined Grid No. 1 Bias Voltage and Video-Signal Voltage adjusted to give an anode current of 50 μa on a 6" x 6" raster.*
3. *With an anode current of 50 μa, typical line width at center of faceplate, using half amplitude points of light energy distribution of a single line is 0.012 inch.*
4. *Protective resistance in the Grid No. 2 and Grid No. 4 circuits is advisable to prevent damage to the tube.*

WARNING:

X-ray radiation shielding may be necessary to protect against possible danger of personal injury from prolonged exposure at close range if this tube is operated at higher than the manufacturer's Maximum Rated Anode Voltage or 16,000 volts, whichever is less.

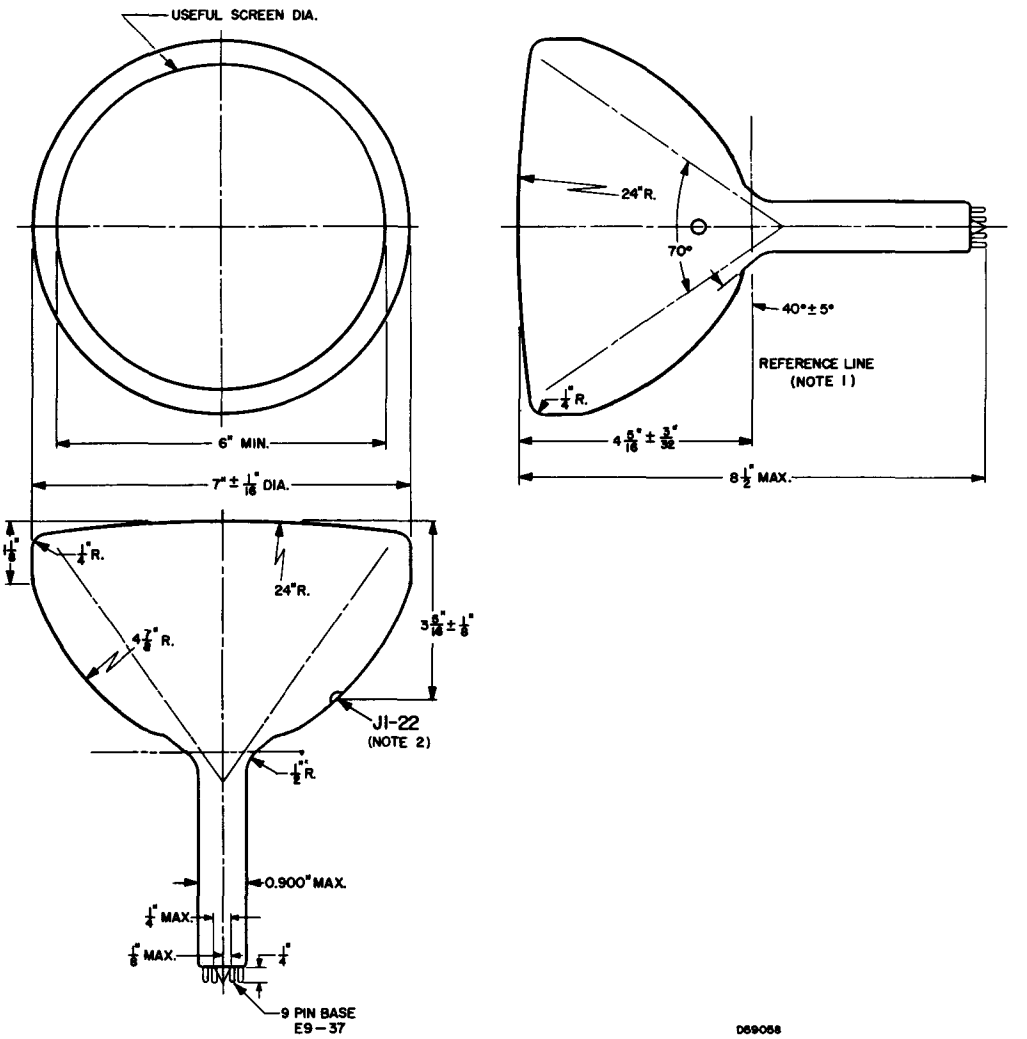

DIAGRAM NOTES:

1. *Reference Line is determined by the point where the leading edge of a 1.640 inch inside diameter ring gauge will stop.*
2. *Anode contact (J1-22) aligns with space between Pins #1 and #9.*